MILITARY - ENVIRONMENTALLY SEALED SWITCHES
Series - 8573, 8574, 8575

MIL-DTL-3950 IWTS Lever Locks

FEATURES

- Environmentally sealed
- 1, 2 and 4 pole circuitry
- 2 & 3 position with maintained and momentary action
- Integrated Wire Termination System (IWTS) for ease of wiring
- Terminal numbers molded into silicone base seal

SPECIFICATIONS

- Environmentally sealed per MIL-DTL-3950
- MS approved and QPL'd per MIL-DTL-3950
- Thermoset molding materials meet flame retardant requirements
- Bushing: 15/32" - 32 thread
- Temperature Range: -85°F to +160°F (65°C to +71°C)
- Accepts MIL-C-39029/1-101 pin
- Life: 20,000 operations at rated load 40,000 operations mechanical life

CURRENT RATINGS FOR -16

No. of Poles	Catalog Number	Type of Operation	28VDC			115 VAC 60 or 400Hz		
			Lamp Load	Resistive Load	Inductive Load	Lamp Load	Resistive Load	Inductive Load
1	8573	Maintained	5	20	15	3	15	10
		Momentary	4	15	10	2	15	7
2	8574	Maintained	7	20	15	4	15	15
		Momentary	5	18	10	2	11	8
4	8575	Maintained	5	20	12	4	15	15
		Momentary	4	18	10	2	11	8

Minimum Rating: "Intermediate Current" per MIL-DTL-3950.

CURRENT RATINGS FOR -20

			Lamp Load	Resistive Load	Inductive Load	Lamp Load	Resistive Load	Inductive Load
1	8573	Maintained	5	7.5	7.5	3	7.5	7.5
		Momentary	4	7.5	7.5	2	7.5	7
2	8574	Maintained	7	7.5	7.5	4	7.5	7.5
		Momentary	5	7.5	7.5	2	7.5	7.5
4	8575	Maintained	5	7.5	7.5	4	7.5	7.5
		Momentary	4	7.5	7.5	2	7.5	7.5

LEVER LOCK SELECTION TABLE — Terminals Accept Wire Contact Within Dimensional Limits of M39029/1-102 for -16 wire size.
— Terminals Accept Wire Contact Within Dimensional Limits of M39029/1-101 for -20 wire size.



8573



8574



8575

CIRCUIT WITH LEVER IN . . .				ONE POLE		TWO POLE		FOUR POLE	
Up Position	Center Position	Down Position (Keyway)	Lever ① Lock Bushing Style	MS Part Number	Catalog Number	MS Part Number	Catalog Number	MS Part Number	Catalog Number
ON→	OFF→	← ON	A	MS27781-21A	8573K1-16	MS27782-21A	8574K1-16	MS27783-21A	8575K1-16
ON	←OFF→	← ON	B	-21B	K27-16	-21B	K27-16	-21B	K27-16
ON→	OFF	← ON	D	-21D	K5-16	-21D	K5-16	-21D	K5-16
ON	←OFF→	ON	E	-21E	K2-16	-21E	K2-16	-21E	K2-16
ON→	OFF	ON	F	-21F	K28-16	-21F	K28-16	-21F	K28-16
ON	OFF	← ON	G	MS27781-21G	8573K3-16	MS27782-21G	8574K3-16	MS27783-21G	8575K3-16
ON→	OFF→	ON	H	-21H	K29-16	-21H	K29-16	-21H	K29-16
ON	←OFF	← ON	J	-21J	K30-16	-21J	K30-16	-21J	K30-16
ON→	←OFF→	ON	K	-21K	K31-16	-21K	K31-16	-21K	K31-16
ON	OFF→	ON	L	-21L	K32-16	-21L	K32-16	-21L	K32-16
ON→	←OFF	ON	M	MS27781-21M	8573K33-16	MS27782-21M	8574K33-16	MS27783-21M	8575K33-16
ON	←OFF	ON	N	-21N	K4-16	-21N	K4-16	-21N	K4-16
ON	OFF→	← ON	P	-21P	K34-16	-21P	K34-16	-21P	K34-16
ON→	NONE	← OFF	D	-22D	K10-16	-22D	K10-16	-22D	K10-16
ON→	NONE	OFF	F	-22F	K35-16	-22F	K35-16	-22F	K35-16
ON	NONE	← OFF	G	MS27781-22G	8573K9-16	MS27782-22G	8574K9-16	MS27783-22G	8575K9-16
ON→	NONE	← ON	D	-23D	K6-16	-23D	K6-16	-23D	K6-16
ON→	NONE	ON	F	-23F	K36-16	- 23F	K36-16	-23F	K36-16
ON	NONE	← ON	G	-23G	K7-16	-23G	K7-16	-23G	K7-16
ON	← OFF	NONE	E	-24E	K16-16	-24E	K16-16	-24E	K16-16
ON→	OFF	NONE	F	MS27781-24F	8573K37-16	MS27782-24F	8574K37-16	MS27783-24F	8575K37-16
ON→	← OFF	NONE	K	-24K	K38-16	-24K	K38-16	-24K	K38-16
ON→	← OFF	NONE	M	-24M	K11-16	-24M	K11-16	-24M	K11-16
ON→	NONE	ON*	F	-26F	K20-16	-26F	K20-16	-26F	K20-16
*ON	← OFF→	ON*	E	MS27781-27E	8573K12-16	MS27782-27E	8574K12-16	MS27783-27E	8575K12-16
*ON	OFF→	ON*	L	-27L	K39-16	-27L	K39-16	-27L	K39-16
*ON	← OFF	ON*	N	-27N	K14-16	-27N	K14-16	-27N	K14-16
NONE	OFF→	ON*	E	-28E	K15-16	-28E	K15-16	-28E	K15-16
ON→	NONE	OFF*	F	-29F	K21-16	-29F	K21-16	-29F	K21-16
OFF→	NONE	ON*	F	MS27781-30F	8573K19-16	MS27782-30F	8574K19-16	MS27783-30F	8575K19-16
ON	← OFF→	ON*	E	-31E	K18-16	-31E	K18-16	-31E	K18-16
ON→	OFF	ON*	F	-31F	K40-16	-31F	K40-16	-31F	K40-16
ON→	← OFF→	ON*	K	-31K	K41-16	-31K	K41-16	-31K	K41-16
ON	OFF→	ON*	L	-31L	K13-16	-31L	K13-16	-31L	K13-16

*** Momentary contact.**

→ Indicates direction against which lever is locked. See page A71 for circuit diagrams. ① Reference bushing styles on page A34.

LEVER LOCK SELECTION TABLE, CONT'D



8573

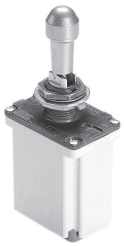

8574



8575

CIRCUIT WITH LEVER IN . . .				ONE POLE		TWO POLE		FOUR POLE	
Up Position	Center Position	Down Position (Keyway)	Lever ① Lock Bushing Style	MS Part Number	Catalog Number	MS Part Number	Catalog Number	MS Part Number	Catalog Number
ON→	← OFF	ON*	M	MS27781-31M	8573K17-16	MS27782-31M	8574K17-16	MS27783-31M	8575K17-16
ON	← OFF	ON*	N	-31N	K8-16	-31N	K8-16	-31N	K8-16
*ON	← ON	NONE	E	-32E	K23-16	-32E	K23-16	-32E	K23-16
ON	← ON	NONE	E	-33E	K24-16	-33E	K24-16	-33E	K24-16
ON→	ON	NONE	F	-33F	K25-16	-33F	K25-16	-33F	K25-16
ON→	← ON	NONE	K	MS27781-33K	8573K26-16	MS27782-33K	8574K26-16	MS27783-33K	8575K26-16
ON→	← ON	NONE	M	-33M	K42-16	-33M	K42-16	-33M	K42-16
ON→	← ON→	ON	A	—	—	-1A	K65-16	-1A	K43-16
ON	← ON→	←ON	B	—	—	-1B	K66-16	-1B	K44-16
ON→	ON	←ON	D	—		-1D	K67-16	-1D	K45-16
ON	← ON→	ON	E			MS27782-1E	8574K68-16	MS27783-1E	8575K46-16
ON→	ON	ON	F	—	—	-1F	K69-16	-1F	K47-16
ON	ON	←ON	G			-1G	K70-16	-1G	K48-16
ON→	ON→	ON	H			-1H	K71-16	-1H	K49-16
ON	← ON	←ON	J			-1J	K72-16	-1J	K50-16
ON→	← ON→	ON	K			MS27782-1K	8574K73-16	MS27783-1K	8575K51-16
ON	ON→	ON	L	—	—	-1L	K74-16	-1L	K52-16
ON→	← ON	ON	M			-1M	K75-16	-1M	K53-16
ON	← ON	ON	N			-1N	K76-16	-1N	K54-16
ON	ON→	←ON	P			-1P	K77-16	-1P	K55-16
ON	← ON→	ON*	E			MS27782-2E	8574K78-16	MS27783-2E	8575K56-16
ON→	ON	ON*	F	—	—	-2F	K79-16	-2F	K57-16
ON→	← ON→	ON*	K			-2K	K80-16	-2K	K58-16
ON	ON→	ON*	L			-2L	K81-16	-2L	K59-16
ON→	← ON	ON*	M			-2M	K82-16	-2M	K60-16
ON	← ON	ON*	N	—	—	MS27782-2N	8574K83-16	MS27783-2N	8575K61-16
*ON	← ON→	ON*	E			-3E	K84-16	-3E	K62-16
*ON	← ON→	ON*	L			-3L	K85-16	-3L	K63-16
*ON	← ON	ON*	N			-3N	K86-16	-3N	K64-16

*** Momentary contact.**
→ Indicates direction against which lever is locked.
See page A71 for circuit diagrams.
① Reference bushing styles on page A34.

CIRCUIT WITH LEVER IN . . .				ONE POLE		TWO POLE		FOUR POLE	
Up Position	Center Position	Down Position (Keyway)	Lever ① Lock Bushing Style	MS Part Number	Catalog Number	MS Part Number	Catalog Number	MS Part Number	Catalog Number
ON →	← OFF →	← ON	A	MS27787-21A	8573K1-20	MS27788-21A	8574K1-20	MS27789-21A	8575K1-20
ON	← OFF →	← ON	B	-21B	K27-20	-21B	K27-20	-21B	K27-20
ON →	OFF	← ON	D	-21D	K5-20	-21D	K5-20	-21D	K5-20
ON	← OFF →	ON	E	-21E	K2-20	-21E	K2-20	-21E	K2-20
ON →	OFF	ON	F	-21F	K28-20	-21F	K28-20	-21F	K28-20
ON	OFF	← ON	G	MS27787-21G	8573K3-20	MS27788-21G	8574K3-20	MS27789-21G	8575K3-20
ON →	OFF →	ON	H	-21H	K29-20	-21H	K29-20	-21H	K29-20
ON	← OFF	← ON	J	-21J	K30-20	-21J	K30-20	-21J	K30-20
ON →	← OFF →	ON	K	-21K	K31-20	-21K	K31-20	-21K	K31-20
ON	OFF →	ON	L	-21L	K32-20	-21L	K32-20	-21L	K32-20
ON →	← OFF	ON	M	MS27787-21M	8573K33-20	MS27788-21M	8574K33-20	MS27789-21M	8575K33-20
ON	← OFF	ON	N	-21N	K4-20	-21N	K4-20	-21N	K4-20
ON	OFF →	← ON	P	-21P	K34-20	-21P	K34-20	-21P	K34-20
ON →	NONE	← OFF	D	-22D	K10-20	-22D	K10-20	-22D	K10-20
ON →	NONE	OFF	F	-22F	K35-20	-22F	K35-20	-22F	K35-20
ON	NONE	← OFF	G	MS27787-22G	8573K9-20	MS27788-22G	8574K9-20	MS27789-22G	8575K9-20
ON →	NONE	← ON	D	-23D	K6-20	-23D	K6-20	-23D	K6-20
ON →	NONE	ON	F	-23F	K36-20	-23F	K36-20	-23F	K36-20
ON	NONE	← ON	G	-23G	K7-20	-23G	K7-20	-23G	K7-20
ON	← OFF	NONE	E	-24E	K16-20	-24E	K16-20	-24E	K16-20
ON →	OFF	NONE	F	MS27787-24F	8573K37-20	MS27788-24F	8574K37-20	MS27789-24F	8575K37-20
ON →	← OFF	NONE	K	-24K	K38-20	-24K	K38-20	-24K	K38-20
ON →	← OFF	NONE	M	-24M	K11-20	-24M	K11-20	-24M	K11-20
ON →	NONE	ON *	F	-26F	K20-20	-26F	K20-20	-26F	K20-20
*ON	← OFF →	ON *	E	MS27787-27E	8573K12-20	MS27788-27E	8574K12-20	MS27789-27E	8575K12-20
*ON	OFF →	ON *	L	-27L	K39-20	-27L	K39-20	-27L	K39-20
*ON	← OFF	ON *	N	-27N	K14-20	-27N	K14-20	-27N	K14-20
NONE	OFF →	ON *	E	-28E	K15-20	-28E	K15-20	-28E	K15-20
ON →	NONE	OFF *	F	-29F	K21-20	-29F	K21-20	-29F	K21-20
OFF→	NONE	ON *	F	MS27787-30F	8573K19-20	MS27788-30F	8574K19-20	MS27789-30F	8575K19-20
ON	← OFF →	ON *	E	-31E	K18-20	-31E	K18-20	-31E	K18-20
ON →	OFF	ON *	F	-31F	K40-20	-31F	K40-20	-31F	K40-20
ON →	← OFF →	ON *	K	-31K	K41-20	-31K	K41-20	-31K	K41-20
ON	OFF →	ON *	L	-31L	K13-20	-31L	K13-20	-31L	K13-20
ON →	← OFF	ON *	M	MS27787-31M	8573K17-20	MS27788-31M	8574K17-20	MS27789-31M	8575K17-20
ON	← OFF	ON *	N	-31N	K8-20	-31N	K8-20	-31N	K8-20
*ON	← ON	NONE	E	-32E	K23-20	-32E	K23-20	-32E	K23-20
ON	← ON	NONE	E	-33E	K24-20	-33E	K24-20	-33E	K24-20
ON →	ON	NONE	F	-33F	K25-20	-33F	K25-20	-33F	K25-20
ON →	← ON	NONE	K	MS27787-33K	8573K26-20	MS27788-33K	8574K26-20	MS27789-33K	8575K26-20
ON →	← ON	NONE	M	-33M	K42-20	-33M	K42-20	-33M	K42-20
ON →	← ON →	← ON	A		—	-1A	K65-20	-1A	K43-20
ON	← ON →	← ON	B			-1B	K66-20	-1B	K44-20
ON →	ON	← ON	D	—	—	MS27788-1D	K67-20	-1D	K45-20
ON	← ON →	ON	E	—	—	-1E	8574K68-20	MS27789-1E	8575K46-20
ON →	ON	ON	F	—		-1F	K69-20	-1F	K47-20
ON	ON	← ON	G			-1G	K70-20	-1G	K48-20
ON →	ON →	ON	H		—	-1H	K71-20	-1H	K49-20
ON	← ON	← ON	J	—		-1J	K72-20	-1J	K50-20
ON →	← ON →	ON	K			MS27788-1K	8574K73-20	MS27789-1K	8575K51-20
ON	ON →	ON	L			-1L	K74-20	-1L	K52-20
ON →	← ON	ON	M			-1M	K75-20	-1M	K53-20
ON	← ON	ON	N		—	-1N	K76-20	-1N	K54-20
ON	ON →	← ON	P	—		-1P	K77-20	-1P	K55-20
ON	← ON →	ON *	E			MS27788-2E	8574K78-20	MS27789-2E	8575K56-20
ON→	ON	ON *	F			-2F	K79-20	-2F	K57-20
ON→	← ON →	ON *	K			-2K	K80-20	-2K	K58-20
ON	ON →	ON *	L		—	-2L	K81-20	-2L	K59-20
ON→	← ON	ON *	M	—		-2M	K82-20	-2M	K60-20
ON	← ON	ON *	N			MS27788-2N	8574K83-20	MS27789-2N	8575K61-20
*ON	← ON →	ON *	E			-3E	K84-20	-3E	K62-20
*ON	ON →	ON *	L		—	-3L	K85-20	-3L	K63-20
*ON	← ON	ON *	N	—		-3N	K86-20	-3N	K64-20

*** Momentary contact.**

→ Indicates direction against which lever is locked.
See page A71 for circuit diagrams.

① Reference bushing styles on page A34.

MOUNTING DIMENSIONS - ONE POLE / 8573

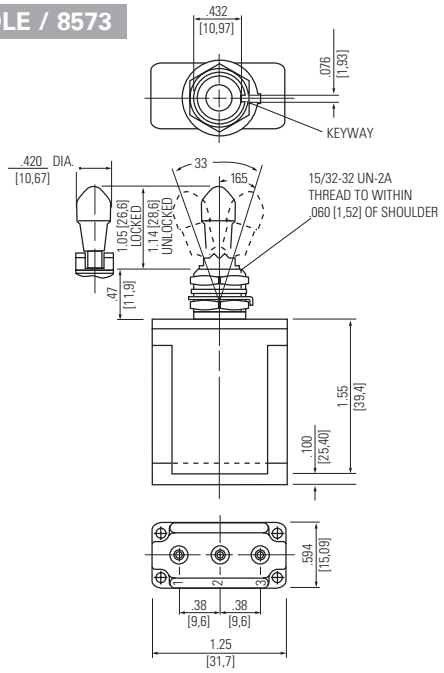

Terminal Identification

MOUNTING DIMENSIONS - TWO POLE / 8574

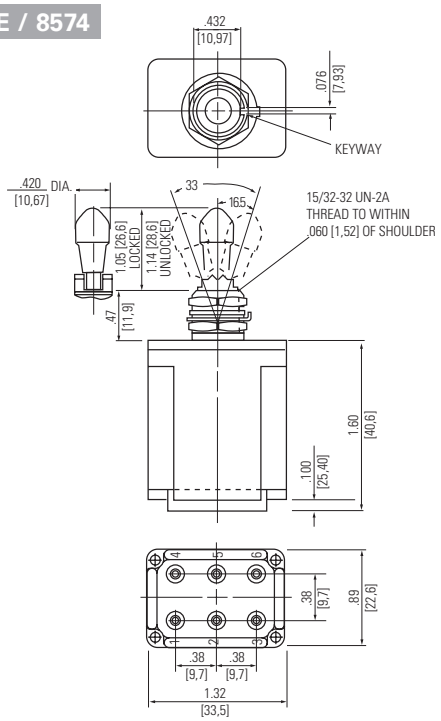

Terminal Identification

STANDARD
0.00 = inches
[0,0] = mm

Mounting dimensions for reference only.

Non-functional terminals not supplied.

MOUNTING DIMENSIONS - FOUR POLE / 8575

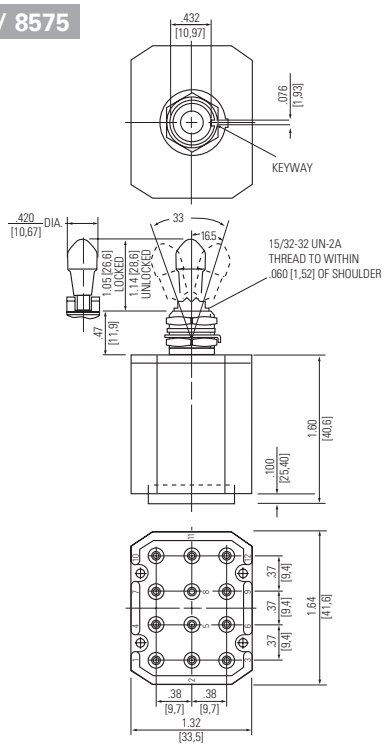

Terminal Identification

Non-functional terminals not supplied.

OPTIONS/ACCESSORIES

- Special mounting hardware
- Mounting hardware furnished assembled
- Special circuits
- Panel seal, part number 32-341 (See Accessories and Custom Components section)
- Special shaped caps available
- Custom wiring harnesses

LEVER LOCK - BUSHING STYLES

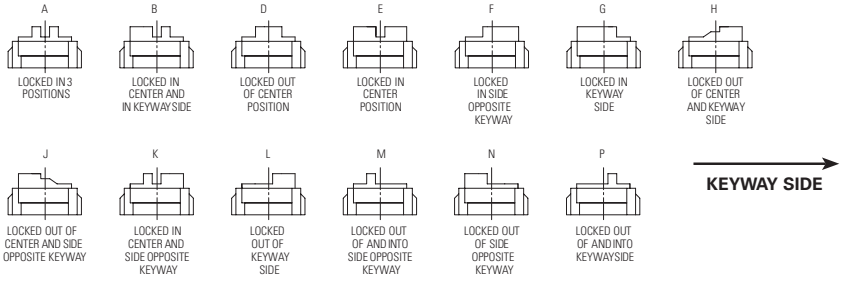

Figures A thru P do not represent details of construction. They schematically illustrate locking function.

PANEL CUTOUT DIMENSIONS

15/32 DIA. BUSHING

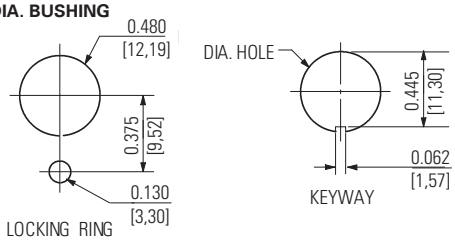

STANDARD
0.00 = inches
[0,0] = mm

Mounting dimensions for reference only.