MILITARY - ENVIRONMENTALLY SEALED SWITCHES
Series - 8500, 8501, 8502

MIL-DTL-3950 Toggle Switches

FEATURES

- Environmentally sealed
- 1, 2 and 4 pole circuitry
- 2 & 3 position with maintained and momentary action
- Molded-in terminal inserts and terminal numbers

SPECIFICATIONS

- Environmentally sealed per MIL-DTL-3950
- MS approved and QPL'd per MIL-DTL-3950
- Thermoset molding materials meet flame retardant requirements
- Bushing: 15/32" - 32 thread
- Temperature Range: -85°F to +160°F (-65°C to +71°C)
- Life: 20,000 operations at rated load
  40,000 operations mechanical life

CURRENT RATINGS

No. of Poles	Catalog Number	Type of Operation	28VDC			115VAC 60 or 400Hz		
			Lamp Load	Resistive Load	Inductive Load	Lamp Load	Resistive Load	Inductive Load
1	8500	Maintained	5	20	15	3	15	10
		Momentary	4	15	10	2	15	7
2	8501	Maintained	7	20	15	4	15	15
		Momentary	5	18	10	2	11	8
4	8502	Maintained	5	20	12	4	15	15
		Momentary	4	18	10	2	11	8

Minimum Rating: "Intermediate Current" per MIL-DTL-3950.

STANDARD LEVER SELECTION TABLE

8500

8501

8502

CIRCUIT WITH LEVER IN . . .			ONE POLE		TWO POLE		FOUR POLE	
Up Position	Center Position	Down Position (Keyway)	MS Part Number	Catalog Number	MS Part Number	Catalog Number	MS Part Number	Catalog Number
ON	OFF	ON	MS24523-21	8500K1	MS24524-21	8501K1	MS24525-21	8502K1
ON	NONE	OFF	-22	K9	-22	K9	-22	K9
ON	NONE	ON	-23	K4	-23	K4	-23	K4
ON	OFF	NONE	-24	K6	-24	K6	-24	K6
ON	NONE	ON*	MS24523-26	8500K5	MS24524-26	8501K5	MS24525-26	8502K5
* ON	OFF	ON*	-27	K2	-27	K2	-27	K2
NONE	OFF	ON*	-28	K7	-28	K7	-28	K7
ON	NONE	OFF*	-29	K10	-29	K10	-29	K10
OFF	NONE	ON*	-30	K11	-30	K11	-30	K11
ON	OFF	ON*	MS24523-31	8500K3	MS24524-31	8501K3	MS24525-31	8502K3
* ON	ON	NONE	-32	K12	-32	K12	-32	K12
ON	ON	NONE	-33	K13	-33	K13	-33	K13
ON	ON	ON	—	—	MS27407-1	8501K14	MS27406-1	8502K15
ON	ON	ON*	—	—	-2	K15	-2	K16
* ON	ON	ON*	—	—	-3	K16	-3	K17
ON	ON	ON	—	—	-4	K17	—	—
ON	ON	ON*	—	—	-5	K18	—	—
* ON	ON	ON*	—	—	-6	K19	—	—

*** Momentary contact.**

See page A71 for circuit diagrams.

"Safran Electrical & Power Proprietary Information. Information contained in this document is Safran Electrical & Power Proprietary Information and is disclosed in confidence. It is the property of Safran Electrical & Power and shall not be used, disclosed to others, or reproduced without the express written agreement of Safran Electrical & Power. If consent is given for reproduction in whole or in part, this notice set forth on each page of this document shall appear in any such reproduction in whole or in part. Unauthorized export or re-export is prohibited."

MOUNTING DIMENSIONS - ONE POLE / 8500

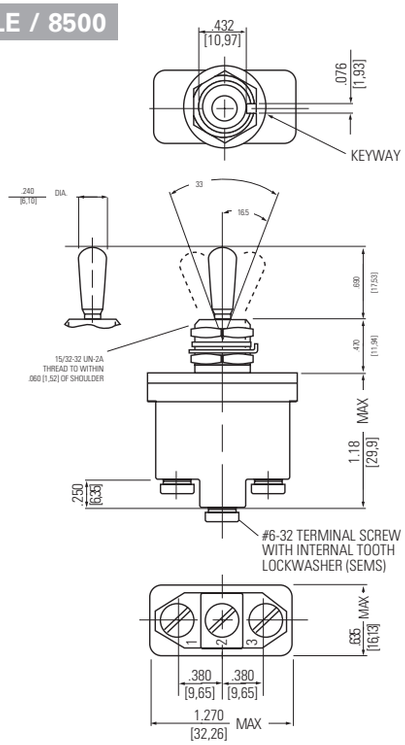

Terminal Identification

MOUNTING DIMENSIONS - TWO POLE / 8501

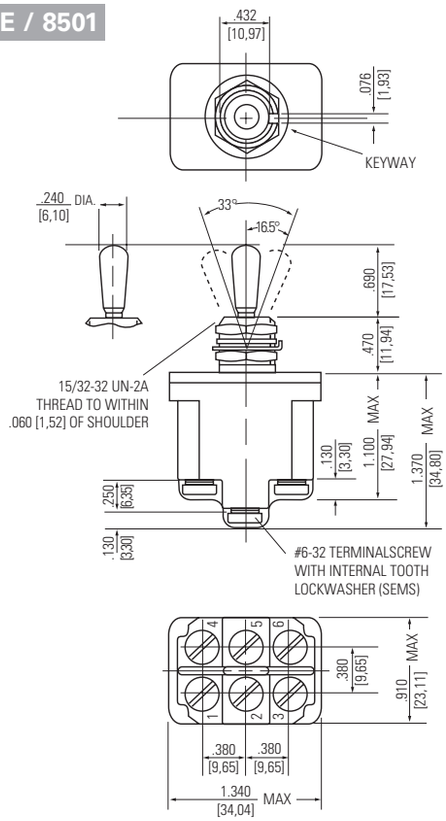

Terminal Identification

STANDARD
0.00 = inches
[0,0] = mm

Mounting dimensions for reference only.

Non-functional terminals not supplied.

"Safran Electrical & Power Proprietary Information. Information contained in this document is Safran Electrical & Power Proprietary Information and is disclosed in confidence. It is the property of Safran Electrical & Power and shall not be used, disclosed to others, or reproduced without the express written agreement of Safran Electrical & Power. If consent is given for reproduction in whole or in part, this notice set forth on each page of this document shall appear in any such reproduction in whole or in part. Unauthorized export or re-export is prohibited."

MOUNTING DIMENSIONS - FOUR POLE / 8502

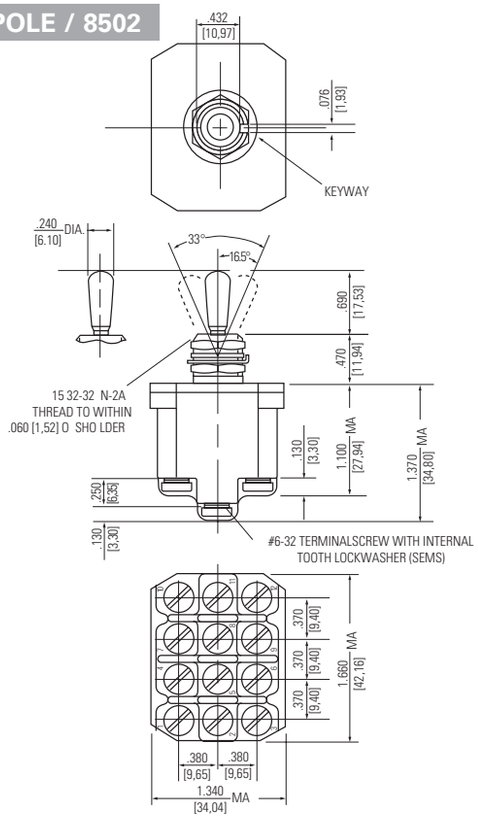

Terminal Identification

Non-functional terminals not supplied.

OPTIONS/ACCESSORIES

- Special mounting hardware
- Mounting hardware furnished assembled
- Terminal screws furnished assembled
- Special circuits
- Panel seal, part number 32-341 (See Accessories and Custom Components section)
- Special "3 Cateye" luminous lever attachment
- Lever extensions and attachable tips (See Accessories and Custom Components section)
- Custom wiring harnesses

PANEL CUTOUT

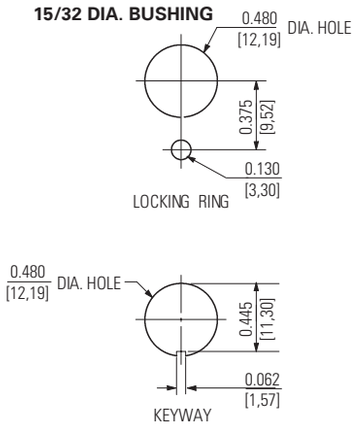

STANDARD
0.00 = inches
[0,0] = mm

Mounting dimensions for reference only.

"Safran Electrical & Power Proprietary Information. Information contained in this document is Safran Electrical & Power Proprietary Information and is disclosed in confidence. It is the property of Safran Electrical & Power and shall not be used, disclosed to others, or reproduced without the express written agreement of Safran Electrical & Power. If consent is given for reproduction in whole or in part, this notice set forth on each page of this document shall appear in any such reproduction in whole or in part. Unauthorized export or re-export is prohibited."