Series 582

Two Pole Lighted Pushbutton Switches

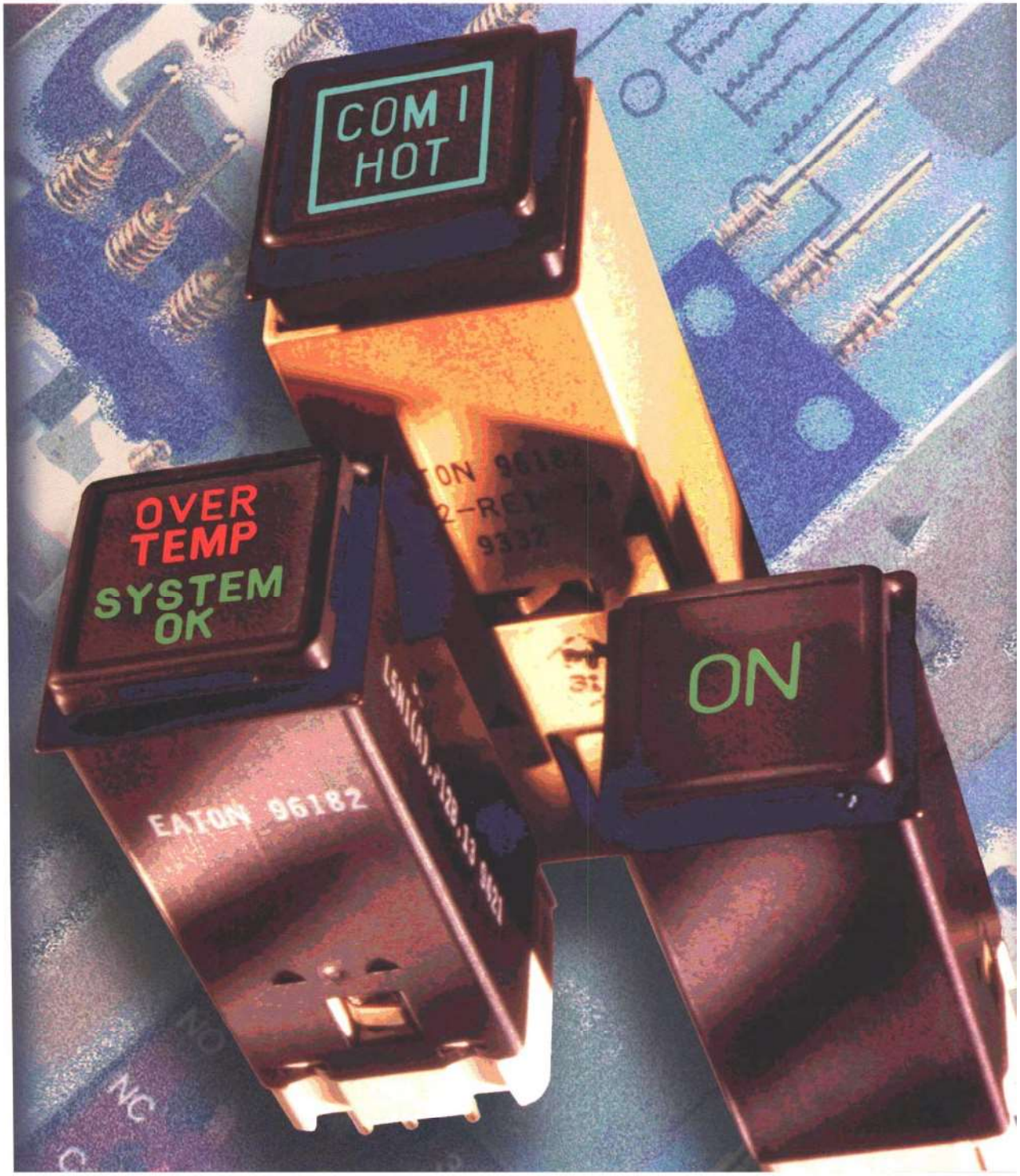

582 Two Pole Lighted Pushbutton Switches

Development

The Series 582 is designed for use in the crew stations of commercial and military aircraft, shipboard systems, off road vehicles and commercial applications requiring a high reliability switch with superior lighting. The 582 is a Series 581 switch mechanism with upgraded lighting capabilities and more options. The Series 581 is qualified to **MIL-S-22885/101.**

The switch design has evolved from specific customer requirements. We asked the people who manufacture avionic, vetronic and shipboard equipment what was needed in a two pole, lighted pushbutton switch. The answers that came back included reliability, light weight, short behind panel depth, sunlight readability, night vision imaging system compatibility, LED illumination, spray-tight sealing and plug-in mounting. The Series 582 provides these capabilities.

582 Switch

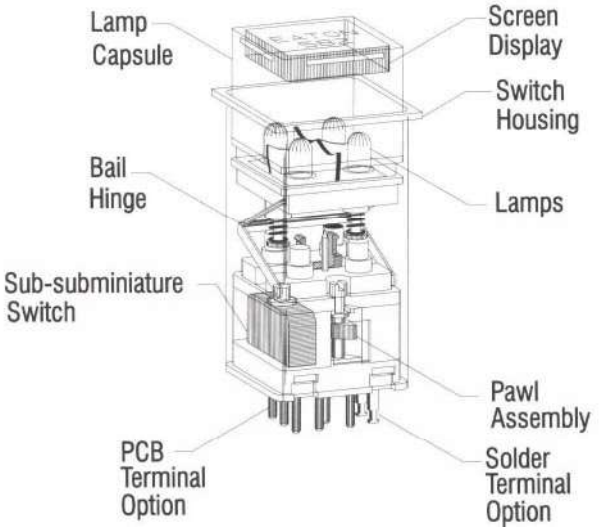

Since 1942, our lighted indicators and pushbutton switches have proven to be the best in the industry at meeting customer requirements for quality, reliability, variety of options and technical performance.

Your program needs will be supported by a committed team of people at Eaton. Eaton wants to be your long-term partner in product innovation, just-in-time delivery, electronic data interchange, quality improvement and responsiveness to changing design needs. A tour of our factory will prove our commitment to continuous improvement, quality control and responsiveness.

Switch Design

The Series 582 is a one or two pole, Form C switch available in momentary and indicating alternate configurations. It is also available in a simple indicator configuration. The Series 582 is supplied with gold-plated terminals and has a lamp capsule retention system that prevents the accidental interchange of capsules during relamping, maintaining the orientation of the capsule in relation to the switch body.

Lamp Capsule Replaceability and Retention

The lamp capsule retention system allows the removal and replacement of the lamp capsule, without requiring the replacement of the switch body, providing the lowest spares costs to the equipment operator. It also prevents the accidental interchange of capsules during relamping, maintaining the orientation of the capsule in relation to the switch body. This prevents accidental mis-orientation of the lamp capsule with the switch body during lamp replacement.

Dual Mounting Pawls

In order to ensure switch mounting integrity, two mounting pawls are supplied in the 582 which ensure balanced engagement force with the panel. Two pawls provide balanced clamping forces with the panel for superior performance under shock and vibration, and offer added safety in the event of a pawl failure or damage.

Sealing Capabilities

The Series 582 has three levels of sealing available; unsealed, drip-proof internal seal and spray-tight diaphragm seal. The unsealed version does not have provisions to prevent water or dust from entering the unit. The drip-proof version is sealed from the inside of the lamp capsule to prevent the entry of water or dust and includes a lamp capsule seal to protect the opening between the lamp capsule and switch housing. Also included wit the drip-proof unit is an o-ring and retainer that mounts between the housing flange and panel to prevent water from penetrating through the panel cut out. The spray-tight version uses an external seal to cover the opening between the capsule and housing and a flat panel seal to prevent water from leaking through the panel cut out.

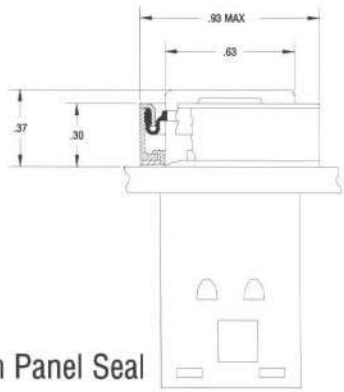

Diaphragm Panel Seal

RFI/EMI Protection

The primary ground path for RFI/EMI protection runs from the RFI screen, mounted in the lamp capsule behind the display screen, to the switch housing. Contact to the panel is made with the housing flange. A redundant ground path also runs through the mounting sleeve to the panel. To maintain the ground circuit, RFI versions are provided with a gold chemical film coated housing instead of the standard black anodized housing.

Termination and Mounting Systems

Termination systems for the 582 include solder, PCB and plug-in interfaces. A rod mount system is also available. In the rod mount version, the front housing flange is eliminated and a semi-circular relief is provided in the switch body. These alterations allow the units to be stacked together and configured within the smallest space possible. The units are assembled together by fastening rods through the hole formed by aligning the two semi-circular features on adjoining switches to end plates located on either end of the switch stack.

Panel spacers are used to adjust the exposure of the switch in front of the panel and to reduce the extension of the switch behind panel. When a light plate is used, it is common for a spacer to be used above panel to mount the housing flange flush with the light plate. In situations where behind panel depth is an issue, a panel spacer can be used to make the unit fit the space available. Custom switches with a shorter switch housing that expose more of the button can be designed for your specific application, if desired.

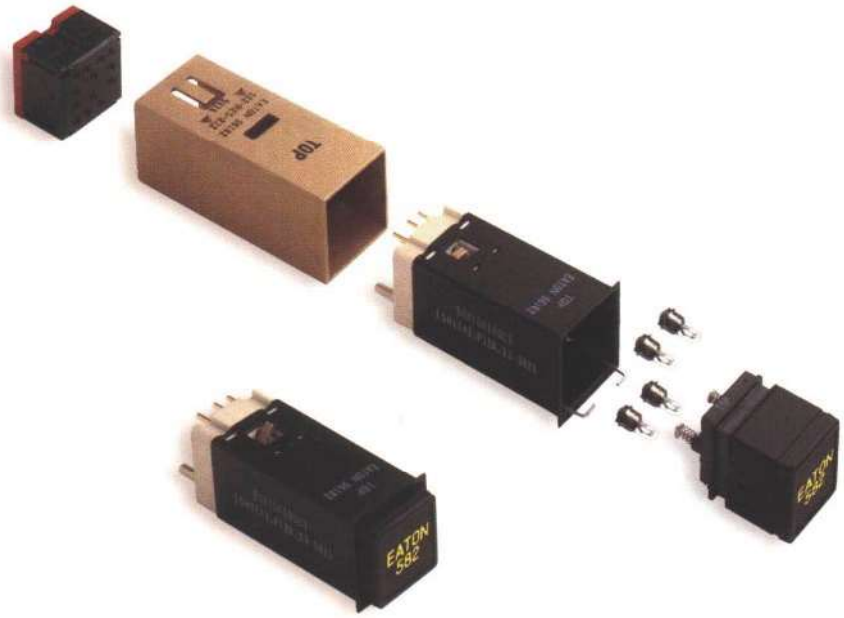

Optics

The **582** is available with state-of-the-art optics that provide superb uniformity and off angle legibility. Luminance has been increased 50 percent above the Series 581. Standard configurations include sunlight readable, lightplate white and NVIS compatible displays. Different colors are available; complying with MIL-S-22885/101, MIL-S-22885/110, MIL-C-25050 and MIL-L-85762. Custom lighting packages are available upon request.

The Eaton optics laboratory features state-of-the-art equipment necessary to design and measure displays in both sunlight readable and NVIS configurations. One highly sensitive spectroradiometer is equipped with an external detector cooled to -30°C that eliminates electronic noise. By eliminating low level noise, the spectroradiometer responds to 10E-15 watts/(cm2*steradian) for NVIS measurements and the resulting data gives Eaton the information to advance the boundaries of NVIS filter design. In addition, a computerized library of filter materials is used to model new designs before they are prototyped, shortening the development cycle for all display types.

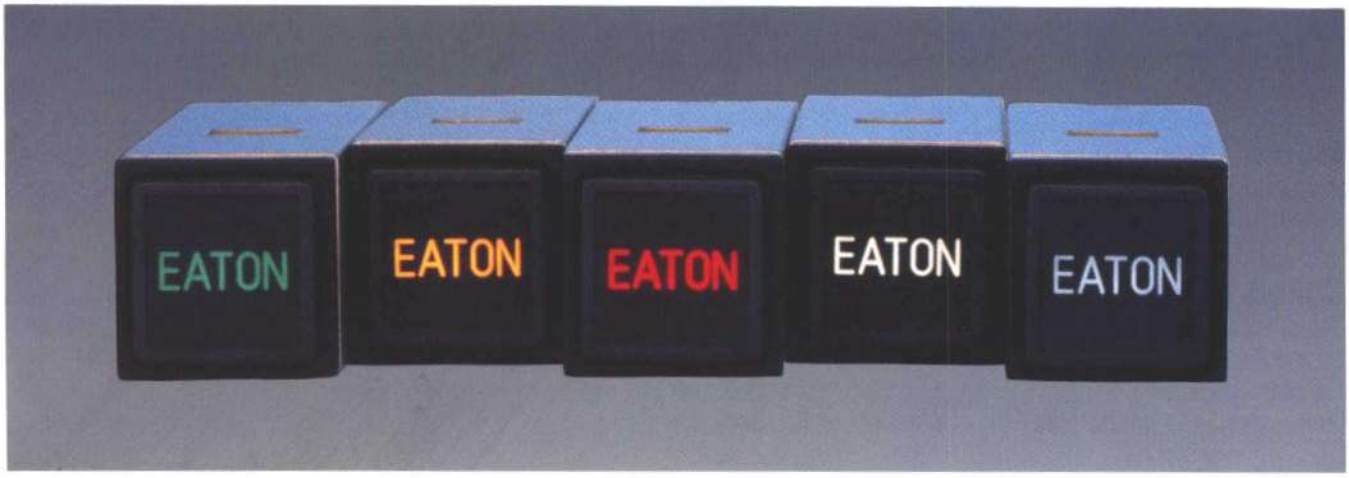

NVIS Lighting

The **582** is one platform for Eaton's NVIS technology. The NVIS system uses a combination of low pass and band pass filters to screen out unwanted near-infrared light from cockpit displays. NVIS displays are replaceable as a capsule only. More information on NVIS displays is contained in Eaton's "Crew Station Lighting for Night Operation" brochure.

LED Lighting

Eaton offers two styles of light-emitting diode light sources (LEDs), replaceable flange based T-1 LEDs and capsule replaceable sunlight readable LEDs, in green, yellow, amber and red colors. T-1 flange based LEDs are available in two and four chip configurations, offering the benefits of redundancy and ease of relamping. The sunlight readable system is replaceable as a capsule only. Contact the factory customer service center for information on specific requirements for split display sunlight readable LEDs. LED light sources have a rated life of 100,000 hours. New colors and more efficient LEDs will also be made available as LED technology matures.

The LED option offers the advantage of increased life with lower energy consumption. In the temperature range from -20°C to + 50°C, the reliability of LEDs over incandescent light sources is expected to be greater than ten to one. And, unlike incandescent light sources, the display brightness remains relatively stable with variations in applied voltage because LEDs are current dependent devices. However, voltage stability does limit the ability to adjust crew station displays to the different light environments of day, dusk and night.

The trade-offs for using a LED light source include lower light output and limited color offerings. Also, the actual life and luminance of LEDs is temperature dependent with a 10 percent reduction in display luminance expected after 10,000 hours of operation.

Dual Color Displays

The Series 582 is also offered with two options allowing the same legend to illuminate in two different colors. In the incandescent version, this is accomplished by assembling a prism into the lamp capsule that directs the light from one side of the display through one color filter and the lamps from the second side of the display through a second color filter. In the LED version, the color is provided by the T-1 lamps. For example, in a full display, the legend can be made to light in red when the top two lamps are energized and light in green when the bottom two lamps are energized. Full displays and two-way split displays can be supplied with the dual color feature.

Low Power Full Display

With this patent pending option, a full display unit can be operated with two lamps and maintain sunlight readability, brightness and uniformity comparable to four lamp systems. It also delivers lower power consumption and touch temperature. Originally developed for military applications, the low power full display is now available to the commercial market. The minimum oncontrast is 1.0 for green, red, amber and white and 0.8 for blue when subjected to 6500 fc of incident light.

Test Facilities

Eaton has made long-term investments in testing equipment to ensure the continuing quality of each product line and speed the design process. Our capabilities include environmental testing, functional testing and calibration of all in-house measuring equipment.

As a U.S. Government approved laboratory, the majority of testing for military and customer qualification tests is completed at the factory. This testing includes mechanical life, electrical life, sinusoidal and random vibration, half sine and sawtooth shock, temperature, humidity, salt spray, altitude, sealing, tensile strength and lighting.

Compatibility with the Series 581

The panel opening for the Series 582 requires a 0.031 maximum radius instead of the original 0.070 maximum radius required for the Series 581. Series 581 dripproof switch bodies can not be used in the Series 582 panel cut out without risking the failure of the panel seal. Series 581 switch bodies without the panel seal can be used in the 582 panel cutout. Also, the Series 582 lamp capsule can not be used with a Series 581 switch body.

Warranties

The Series 582 carries a two-year warranty for defects in materials and workmanship from the date of manufacture.

Mechanical Specifications

The length of each unit is specified from the rear of the housing flange to the end of the switch body, not including terminals. Terminal length is 0.15 inches (3.8 mm) for solder and PCB units, except alternate switches with a split ground, plug-in and rod mount units, which have a 0.20 inch (5.1 mm) terminal.

To calculate the actual behind panel depth for your application, subtract the thickness of the panel, the thickness of spacers used above panel and 0.030 inches for the drip-proof panel seal, if required, from the length of unit listed below. Weights listed are for switches with T-1 lamps.

The difference between the basic and short lengths is due to the size of the lamp capsule. The basic unit has better lighting uniformity, lower touch temperature and can provide for lighting options such as the NVIS compatible display and the sunlight readable LED display.

	Maximum Length Behind Housing Flange	Maximum Weight
Short Length, Solder & PCB termination	1.19 inches (30.2 mm)	18 grams
Short Length, Rod Mount & Plug-in termination	1.36 inches (34.5 mm)	21 grams
Basic Length, Solder & PCB termination	1.40 inches (35.6 mm)	21 grams
Basic Length, Rod Mount & Plug-in termination	1.57 inches (39.9 mm)	24 grams
Basic Length, Solder & PCB termination, Diaphragm Seal	1.16 inches (29.5 mm)	26 grams
Basic Length, Plug-in termination, Diaphragm Seal	1.33 inches (33.8 mm)	29 grams
582-81/582-RE1 Plug-in Mount	See 582-R1/RE1	14 grams

Switch Mechanism	MIL-S-8805/101, silver contacts with gold plating
Switch Form	Form C
Actuation Travel	0.125 ± 0.025 inches (3.2 ± 0.6 mm)
Actuation Force	1 to 5 lbs (4.5 to 22.3 N)
Extraction Force	2 to 5 lbs (8.9 to 22.3 N)
Mounting Torque	16 ± 4 inch-oz. (0.113 ± 0.028 J)
Internal Seal	Drip-proof per MIL-STD-108
Diaphragm Seal	Spraytight MIL-STD-108
Mechanical Life	100,000 cycles
EMI/RFI Shielding	When specified, resistance between the mounting panel and EMI/RFI screen shall be measured in accordance with MIL-STD-202, Method 307 and shall not exceed 3 ohms.
Marking	MIL-STD-130
Light Sources	Both incandescent and LED light sources are considered expendable parts and do not have a warranteed life. Light sources are rated under ideal conditions and vary considerably in service. MTBF and life data presented in this catalog are for comparison purposes only.

Mechanical Specifications

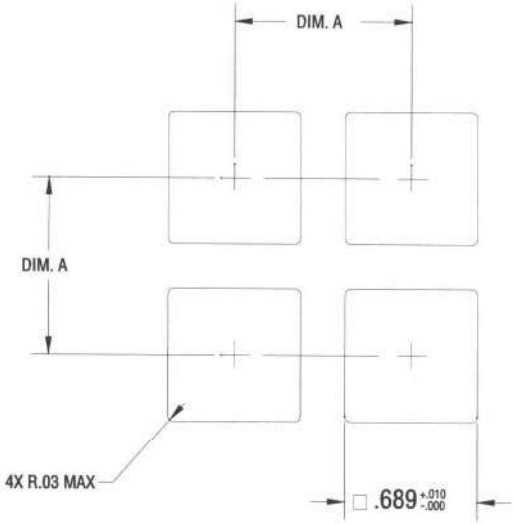

Recommended Panel Cutout

	Dim A
Standard	.780 (19.8)
Diaphragm	.930 (23.6)

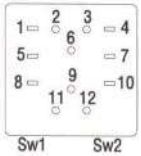

Terminal Identification (Shown in Solder Option)

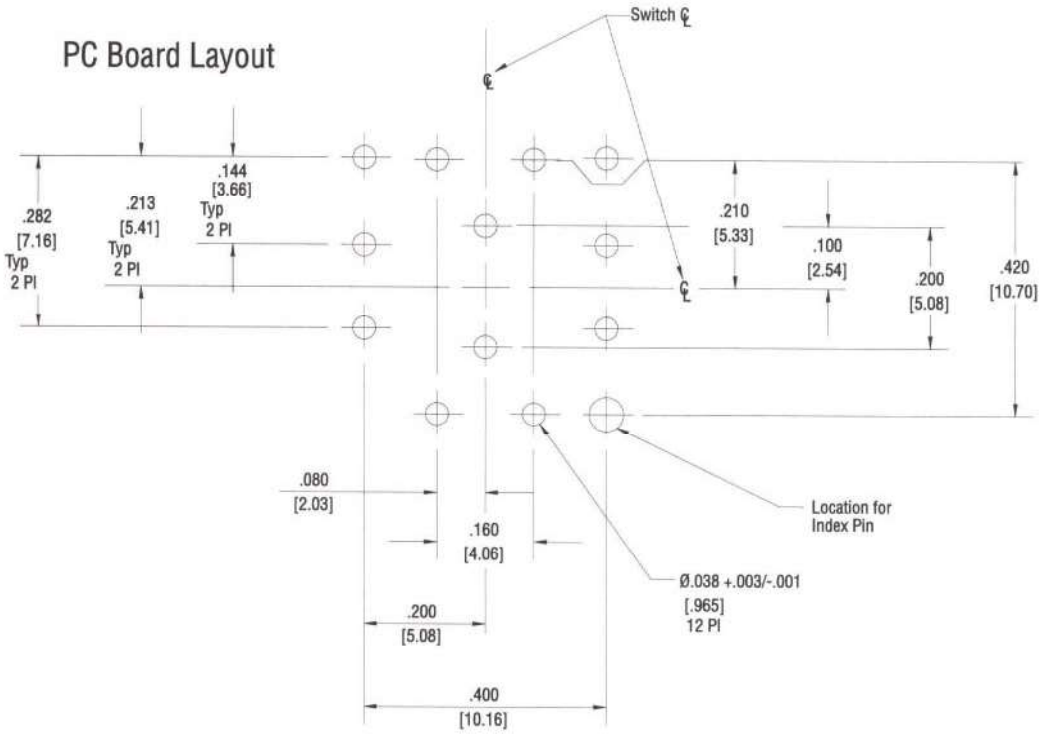

Dimensional Specificiations

Series 582
Sealed and Unsealed

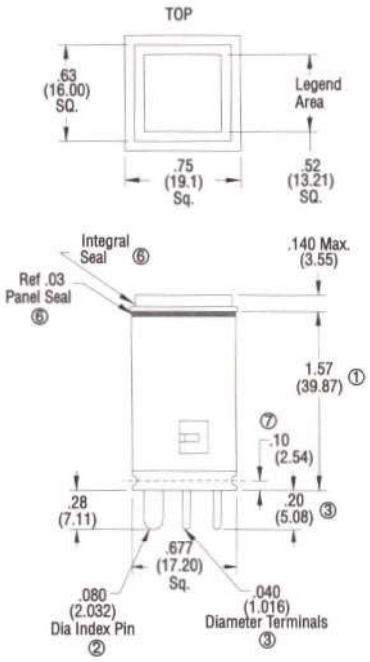

Series 582
Diaphragm Seal

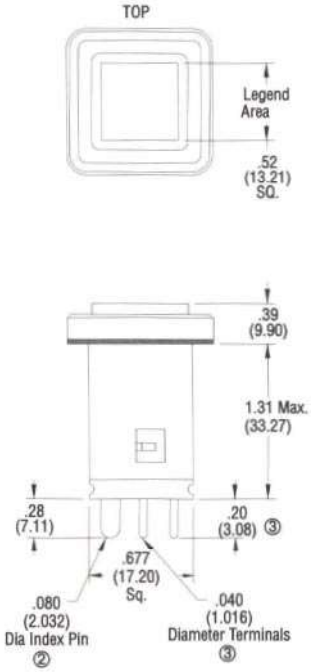

① For short unit subtract .210" from dimension shown.

② Included on plugin/crimp type termination units.

③ For PCB shall be .030 diameter. For solder shall be single turret .050 diameter.

4 . Dimensions are in inches. Unless otherwise specified, tolerances are ±.010 for three place decimals and ±.03 for two place decimals.

5. Mounting screw torque 16 ±4 in-oz.

⑥ For sealed units only.

⑦ Required for rodmount. Optional for other types.

Rod Mount and Plug-in/Crimp Type Terminations

Series 582
Sealed and Unsealed

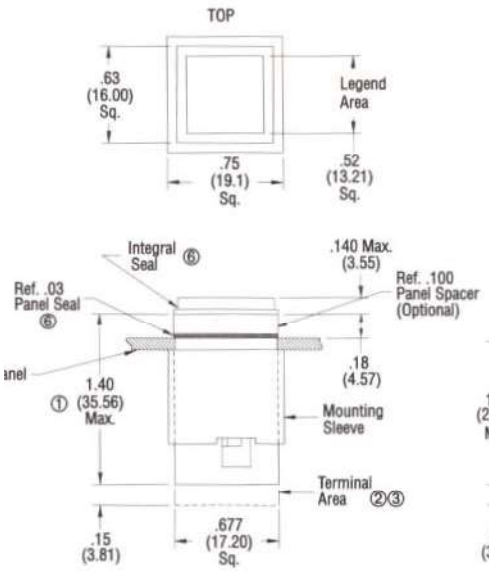

Series 582
Diaphragm Seal

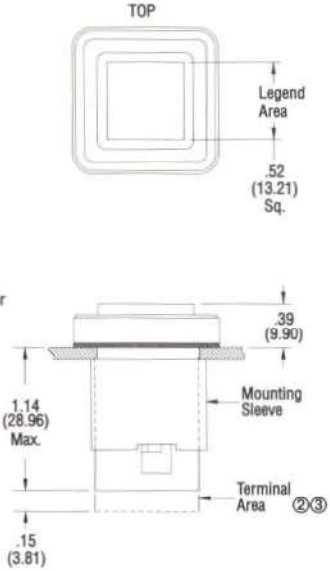

① For short unit subtract 0.210" from from dimension shown.

② Terminals for printed circuit board shall be .030 diameter for lamp circuit and .030 x .020 for switch.

③ Terminals for solder shall be single turret, .050 diameter for lamp circuit and .05 x .02 for switch.

4. Dimensions are in inches. Unless otherwise specified, tolerances are ±.010 for three place decimals and ±.03 for two place decimals.

5. Mounting screw torque 16 ±4 in-oz.

⑥ For sealed units only.

7. Alternate with split ground lamp circuit is provided the plug-in length.

8. Mounting sleeve & spacer is included on solder and PCB type units.

Solder and PCB Termination

Environmental Specifications

Operating Temperature	-55°C to + 71 °C -20°C to + 50°C for T-1 LED light sources -25°C to + 75°C for SLR LED light sources
Storage Temperatures	-55°C to + 85°C -64°C to + 95°C for 24 hours excluding LED light sources -30°C to + 86°C for LED light sources
Thermal Shock	MIL-STD-202, Method 107, Condition A
Moisture	MIL-STD-202, Method 106
Salt Spray	MIL-STD-202, Method 101, Condition A, 96 hours
Sand and Dust	MIL-STD-202, Method 110
Fungus	MIL-STD-810, Method 508, All materials used are non-nutrient to fungus
Vibration	MIL-STD-202, Method 204, Condition B, for single channel mount. For multiple channel matrix mount, contact the factory for information.
Shock	MIL-STD-202, Method 213, Condition B
Explosion	MIL-STD-202, Method 109

Electrical Specifications

High Current Rating

Load	Sea Level 28 VDC max	Sea Level 115 VAC max	50 000 ft 28 VDC max	50 000 ft 115 VAC max	Life
Resistive	7.5 A	7.5 A	5.0 A	5.0 A	50 000 cycles
Inductive	4.0 A	4.0 A	2.0 A	2.0 A	50 000 cycles
Lamp	1.OA	1.OA	-	-	-

Low Current Rating

Load	Sea Level 28 VDC max	Sea Level 115 VAC max	50 000 ft 28 VDC max	50 000 ft 115 VAC max	Life
Resistive	1.0 A	1.0 A	0.5 A	0.5 A	50 000 cycles
Inductive	0.5 A	0.5 A	0.5 A	0.5 A	50 000 cycles

Low Level Resistive	Sea Level 0.03 VDC max	Life
	0.01 A	50 000 cycles

1. Contacts subjected to currents over 100 mA are no longer usable for low current applications.

2. Contact Resistance: Initial contact resistance at 6 VDC, 100 mA is 25 mΩ maximum. Post application resistance is 1 I of the electrical circuit when measured during the operation of that circuit. The switch contacts are not hermetically sealed. Actual contact resistance will vary based upon the cleanliness of the operating environment.

Form "C" Switch Circuits

Lamp Circuits

Display Type Specifications

The Series 582 is available with a variety of display screens. The most common types are listed below, for special requirements, contact the factory service center.

Display Type	With light source not energized		With light source energized		Description
	Legend	Background	Legend	Background	
1	White	Black	Color	Black	White legend lights in color when energized.
2	Black	White	Black	Color	White background lights in color when energized.
5	Black	Black	Color	Black	Hidden legend lights in sunlight readable color when energized.
6	Black	Color	Black	Color	Colored background lights in color when energized.
8	Black	Black	Black	Color	Hidden background lights in sunlight readable color when energized.
9	White	Black	White	Color	Hidden background lights in sunlight readable color when energized. Legend is white at all times.
12	White	Black	Color	Black	Top Half: White legend lights in color when energized and is specifically designed for low ambient light conditions.
	Black	Black	Color	Black	Bottom half: Hidden legend lights in sunlight readable color when energized.
35	Gray	Black	Color	Black	Slightly visible gray legend lights in sunlight readable color when energized.
36	Black	Black	Color	Black	Top half: Hidden legend lights in sunlight readable color when energized.
	White	Black	Color	Black	Bottom Half: White legend lights in color when energized and is specifically designed for low ambient light conditions.
40	White	Black	Color	Black	White legend lights in color when energized. Designed for low ambient light conditions.
48	Black	Black	Black	Color	Top half: Hidden background lights in sunlight read able color when energized. Color may be visible in the unenergized condition.
	Black	Black	Color	Black	Bottom half: Hidden legend lights in sunlight readable color when energized.
72	Black	Black	Color	Black	Top half: Hidden legend lights in sunlight readable color when energized.
	Black	Black	Black	Color	Bottom half: Hidden background lights in sunlight readable color when energized. Some color may be visible in the unenergized condition.

Optical Specifications

Sunlight Readable Display Types & NVIS Displays in Sunlight Readable mode

On Contrast	> 0.6
Off Contrast	< 0.1
Character-to-Character Brightness Uniformity	< 2.0:1 Basic Length (Except NVIS Red and Green A Displays)
Character-to-Character Brightness Uniformity	< 3.0:1 Short Length
Luminance (without RFI)	185 fL minimum
Luminance (with RFI)	150 fL minimum

All SRL displays meet or exceed the requirements of MIL-S-22885/101 when used with a 0.15 MSCP lamp. See the military specification for more detailed information on the color coordinates and luminance of individual colors.

Non-Sunlight Readable Displays

For applications that do not have sunlight readability requirements, a line of commercial display screens is available. These displays meet the requirements listed below when used with a 0.15 MSCP lamp. Values are in fL.

	Display Type 1		Display Type 2 & 6		Display Type 40[1]	
Color	STD	RFI	STD	RFI	STD	RFI
White	300	150	350	175	3.0 ± 1.0	1.5 ± 1.0
Blue	25	12	30	12	3.0±1.0	1.5±1.0
Yellow	200	100	350	175	3.0 ± 1.0	1.5 ± 1.0
Green	40	20	50	25	3.0 ± 1.0	1.5 ± 1.0
Red	50	25	70	35	3.0 ± 1.0	1.5 ± 1.0

1. When used with a 5V, 0.15 MSCP lamp operated at 4.5 ± 0.5 V, luminance will be 1.0 ± 0.5 fL per MIL-L-27160, section 3.3.5.a.

NVIS Display Types in NVIS mode

	NRa maximum	NRb maximum
Green A, Green B @ 0.1 fL	8.0 X 10 -11	7.0 X 10 -11
Yellow, Class A C 15.0 fl	5.0 X 10 -8	N/A
Yellow, Class B @ 15.0 fL	N/A	4.7 X 10 -8
Red @ 15.0 fL	N/A	1.4 X 10 -7
White @ 10.0fL	1.0 X 10 -7	6.0 X 10

NVIS displays meet the compatibility requirements of MIL-L-85762 at derated voltage and the sunlight readability requirements of MIL-S-22885/101 when energized at full rated voltage with a 0.15 MSCP lamp. With 28 VDC lamps, Green A, green B and white comply with the MIL-L-85762 luminance requirement when energized at approximately 6 VDC, yellow complies at approximately 12 VDC and red complies at approximately 14 VDC.

LED Displays

Approximate values of display luminance for a hidden message, lighted letter display type 5 are listed below. Values are in fL.

LED Color	Peak Wavelength	2 Chip	4 Chip	Sunlight Readable	SLR RFI
Pure Green	555 nm	20	40	100	80
Green	565 nm	40	80	200	160
Amber	585 nm	35	70	150	120
Orange	610 nm	45	90	200	160
Ultra Red	660 nm	45	90	200	160

1. Lighting values assume the use of four LED lamps in a full display. Splitting the display will nominally reduce luminance values.
2. Pure green is not sunlight readable.

How to Use this Catalog

This catalog describes the standard and optional features of the Series 582. To determine the correct part number, refer to the following pages or use the Quick Reference Specification Tables in the inside back cover. Samples of a typical part number are shown on pages 7-13 and a Part Number Specification Sheet is provided on page 21 to aid your selection.

582	11	A4	B21	C1	D2[1]	F4	L5	N2	(GR)	,P12	,16	ON/OFF
Series Number	Unit Options	Basic Unit	Termin-ation	Lamp Circuit	Panel Thickness	Lamp Type	Display Screen	Display Configuration	Display Color	Character Font/Height	Legend Configuration	Legend

1. The panel thickness call-out is only required for solder and PCB part numbers where mounting hardware is supplied. Plug-in termination mounting hardware is identified by separate part numbers listed in the rear of the catalog.

Series and Option Codes

58211 A4B21 C1 D2F4L5N2(GR),P12,16 ON/OFF

The Series number and unit options are identified by the first five digits of the part number. The first three digits identify the unit as a Series 582. The fourth and fifth digits identify product options.

Lighting Option	Behind Flange Length Solder/PCB [1,2]	Behind Flange Length Plug-in/ Rod Mount	**Fourth Digit**
T-1 Lamp, Short Capsule	1.19 inches (30.2 mm)	1.36 inches (34.5 mm)	0
T-1 Lamp, Basic Capsule	1.40 inches (35.6 mm)	1.57 inches (39.9 mm)	1
LED	1.40 inches (35.6 mm)	1.57 inches (39.9 mm)	2
Dual Color	1.40 inches (35.6 mm)	1.57 inches (39.9 mm)	3
NVIS	1.40 inches (35.6 mm)	1.57 inches (39.9 mm)	4
Low Power Full Display [3]	1.40 inches (35.6 mm)	1.57 inches (39.9 mm)	5
Dual Color, T1 LED	1.40 inches (35.6 mm)	1.57 inches (39.9 mm)	6

1. Alternate switches requiring a split ground circuit (C3) will be the plug-in length.
2. Units specified with the rod mount feature will be the plug-in length.
3. Patent Pending. Only uses two T-1 lamps mounted diagonally from each other.

Seal and RFI Option	**Fifth Digit**
Unsealed	0
Drip-proof, w/ Panel Seal	1
Spraytight, w/ Diaphragm Seal	2
Unsealed, w/ RFI	3
Drip-proof, w/ Panel Seal & RFI	4
Spraytight, w/ Diaph. Seal & RFI	5

1. RFI not available with SLR LED.

Switch Action Codes

58211 **A4** B21 C1 D2F4L5N2(GR),P12,16 ON/OFF

The letter "A" and the digit immediately following it identify the switch action and number of poles.

Basic Unit	**Code**
Indicator	**AO**
1 PDT Momentary switch	**A1**
2PDT Momentary switch	**A2**
1 PDT Alternate switch	**A3**
2PDT Alternate switch	**A4**

Termination and Mounting Codes

58211A4 **B2** 1C1D2F4L5N2(GR),P12,16 ON/OFF

The letter "B" and the digit following it identify the termination and mounting method.

Termination	**Code**
Plug-in	BO
Single Turret Solder	B21
Single Turret Solder, Tin Dipped	B22
PCB	B31
PCB, Tin Dipped	B32
Single Turret Solder w/ Rod Mount	B41
Single Turret Solder w/ Rod Mount, Tin Dipped	B42
PCB w/ Rod Mount	B51
PCB w/ Rod Mount, Tin Dipped	B52

Lamp Circuit Codes

58211A4B21 **C1** D2F4L5N2(GR),P12,16 ON/OFF

The letter "C" and the digit following it designate the lamp circuit. For information on custom circuits, contact the factory customer service center.

Lamp Circuit	**Code**
Common Ground	C1
Horizontal Split, Dual Ground [1]	C3

t. When specified with the B2X or B3X terminations and alternate action, the basic and short length switches will be 1.57 (39.9 mm) and 1.36 (34.5mm) inches respectively.

Mounting Hardware Codes

58211 A4B21 C1 **D2** F4L5N2(GR),P12.16 ON/OFF

The letter "D" and the digit following it identify the mounting hardware requirements for solder and PCB units. This code is omitted if a plug-in mount unit is specified. Plug-in hardware is specified by separate part numbers listed later in this catalog.

Gold colored parts are chemical film coated to maintain EMI/RFI compatibility. Custom hardware for panel thicknesses outside the listed range is available. Contact the factory customer service center.

Spacer Color	Spacer Height	Panel Thickness Range	**Code**
No Spacer	-	0.030 - 0.250 (0.76 - 6.35 mm)	D1
Black	0.100 (2.5 mm)	0.030 - 0.250 (0.76 - 6.35 mm)	D2
Gold (EMI/RFI)	0.100 (2.5 mm)	0.030 - 0.250 (0.76 - 6.35 mm)	D3

Light Source Codes

58211 A4B21 C1D2 **F4** L5N2(GR),P12,16 ON/OFF

The letter "F" and the digits immediately following it identify the light source supplied with the unit.

The Series 582 uses four T-1, midget flange, based lamps for a light source, except for the sunlight readable LED light source which uses integrally mounted LEDs in the capsule. T-1 lamps are the lowest replaceable unit when specified and are available in incandescent, 2 chip LED and 4 chip LED configurations.

Light Source Codes continued

T-1 Incandescent Lamps

Lamp Type	Design Volts	Design Amps	Design Watts	Avg MSCP[1]	Design Life (hrs)	Lamp Code
Incandescent 2,4	5.0	0.06	0.30	0.15	6,500	F8
Incandescent 2,3,4	5.0	0.115	0.58	0.15	40,000	F2
Incandescent	6.0	0.06	0.36	0.13	3,000	F13
Incandescent 3	12.0	0.04	0.48	0.15	16,000	F18
Incandescent 3	14.0	0.04	0.56	0.15	16,000	F6
Incandescent 3	18.0	0.026	0.47	0.15	10,000	F10
Incandescent 3,5	28.0	0.024	0.67	0.13	16,000	F4
Incandescent 3,10	28.0	0.026	0.73	0.23	16,000	F29
Low Power Display 6	5.0	0.115	0.58	0.15	40,000	F46
Dummy lamp	-	-	-	-	-	F11

1. MSCP is defined as Mean Spherical Candle Power and is an indication of the total light emitted by the lamp. Lamps are aged and selected to a ±15°/ tolerance.
2. 5 volt lamps have nickel plated bases to eliminate the effect of fretting corrosion in lead based lamps. Over time, the voltage seen by lamp will drop about 1.5 VDC due to the increased resistance caused by fretting corrosion.
3. When using lamps above 0.45 design watts, only the basic length versions can be used. Additional heat sinking and air flow is recommended. Matrix mounting is not recommended.
4. MS-24515
5. MS-3338
6. Two F2 lamps and two dummy plugs provided. Lamps are assembled in diagonally apposite positions.
7. Under mechanical stress, incandescent lamps will operate for approximately 20%-40% of their rated life before failure.
8. Series 582 units are designed for use with lamps installed. For proper operation of the switch, all four locations must have a lamp or dummy plug installed.
9. The lamps listed above will work with all display types. Other lamps with lower current and MSCP are available by request. Contact the factory customer service center for additional information.
10. Required for NVIS red compliance to MIL-L-85762. Minimizes radiance output of all NVIS colors at specified luminance.

T-1 Light Emitting Diode Lamps with Internal Resistors [1]

LED Type	Peak Wavelength	Design Voltage	Design Amperage	Design Watts	Average Brightness (mcd)	Code
2 Chip LED, Pure Grn	555 nm	5.0	0.040	0.20	4	F40
2 Chip LED, Green	565 nm	5.0	0.040	0.20	13	F40
2 Chip LED, Amber	585 nm	5.0	0.040	0.20	11	F40
2 Chip LED, Orange	610 nm	5.0	0.040	0.20	11	F40
2 Chip LED, Ultra Red	660 nm	5.0	0.040	0.20	25	F40
4 Chip LED, Pure Grn	555 nm	28.0	0.020	0.56	10	F43
4 Chip LED, Green	565 nm	28.0	0.020	0.56	20	F43
4 Chip LED, Amber	585 nm	28.0	0.020	0.56	10	F43
4 Chip LED, Orange	610 nm	28.0	0.020	0.56	14	F43
4 Chip LED, Ultra Red	660 nm	28.0	0.020	0.56	30	F43

Sunlight Readable Light Emitting Diode Capsule 2,3

LED Type	Peak Wavelength	LED V Forward Voltage	Design Amperage	Code
SR LED, Green	565 nm	7.5 min.	.040 max	F45
SR LED, Amber	585 nm	7.5 min.	.040 max	F45
SR LED, Orange	606 nm	7.5 min.	.040 max	F45
SR LED, Red	639 nm	6.5 min.	.040 max	F45

1. T-1 LEDs are not recommended for high ambient light levels due to their low light output.
2. Lowest replaceable unit is the lamp capsule.
3. Application notes on resistor sizing, dimming and pulse width modulation available from the factory.
4. For all LED light sources, PIN#6 or/and 9 are ground (-).
5. RFI not available with SLR LED

Display Screen Codes

58211A4B21C1D2F4 **L5** N2(GR),P12,16 ON/OFF

The letter "L" and the digits immediately following it identify the display screen. Display screens vary by the light source specified. To select the proper display screen code, identify the display type listed in the left column and the light source listed across the top row. Display screen types were specified in the Optical section, see page 6 .

Display Screen Codes

Display Type	Incandescent	NVIS	SLR LED & T-1 LED	Dual Color	Low Power	LED Dual Color
1	L301		L401	L501	L601	L701
2	L302		L402	L502	L602	L702
5	L5	L60	L405	L503	L605	L703 [2]
6	L306					
7	L7				L607	
8	L8 [1]	L61	L408	L508	L608	L708 [2]
9	L9 [1]		L409		L609	
12	L12	L62	L412		L612	
35	L35	L64	L435		L635	
36	L36	L65	L436			
40	L40	L66	L440		L640	
48	L48	L63	L448			
72	L72[1]	L67	L472			

1. Color may be discernible in off condition in the short length version.
2. Not sunlight readable.

Display Configuration Codes

58211A4B21 C1 D2F4L5N2(GR).P12,16 ON/OFF

The letter "N" and the number immediately following it designate the lens configuration as follows. Color callouts are shown for orientation.

Color Codes

58211A4B21C1D2F4L5N2 **(GR)**, P12,16 ON/OFF

The letters in parentheses following the lens configuration identify the lighted colors of the unit. In split displays, multiple letters are used to designate the colors of individual sections, in order from left to right and top to bottom. For example, in a four way split device, the designation (RDLG) would identify a red upper left quadrant, white upper right, blue lower left and green lower right.
Note: for dual color displays, two color codes are required where one is used in the standard part number.
For example, 58231 A2BOC1 F4LJ05N1(RG),P12,12 READY.

Color Codes continued

Incandescent Display Color Codes

The colors listed below have improved color discrimination throughout the dimming range when compared to the original 581 colors. Please note that the Series 581 MIL-S-22885/101 display screen designs for blue and white are no longer available. Each color is defined by color coordinates published in the referenced military specification.

Color	Dominant Wavelength	M22885/101	M22885/110	MIL-C-25050	**Code**
Blue[1]	530 nm	No	Yes	No	L
Green[1]	543 nm	Yes	No	No	G
Green	553 nm	No	Yes	Yes	M
White[1]	565 nm	No	Yes	No	D
Amber[1]	592 nm	Yes	Yes	Yes	A
Red[1]	621 nm	Yes	Yes	Yes	R

1. Meets M22885/90 and M22885/109 color and luminance specifications.
2. Color coordinates are published in MIL-S-22885/101 and MIL-S-22885/110.
3. Aviation blue per MIL-C-25050 is not suitable for lighted pushbuttons because it can not be made sunlight readable.
4. Eaton's white color "D" supersedes the use of aviation white. It overlaps part of the MIL-C-25050 white specification, but eliminates the undesired yellow and pink variations inherent with aviation white's location on the CIE 1931 color chart.

NVIS Display Color Codes

Color[2]	u'	v'	r'	NVIS Luminance	Fast Jet G/R	Helo G/R	Fast Jet NVGGain	Sunlight Readable Luminance	Code
Green A	.088	.543	.037	0.1	230	1600	.387	>200 fL	F
Green B	.131	.623	.057	0.1	230	2600	.618	>200 fL	H
Yellow, Class A	.274	.622	.083	15.0	N/A	N/A	N/A	>150 fL	T
Yellow, Class B	.274	.622	.083	15.0	180	80	.910	>200 fL	J
Red	.450	.550	.060	15.0	120	25	.634	>160 fL	K
White	.195	.505	.037	10.0	330	210	.478	>200 fL	P

1. All NVIS colors meet the requirements of MIL-L-85762 and current UK military specifications. NVIS white was developed for the UK market. The U.S. military specification does not have a white requirement at this time.
2. Luminance values are for full and half displays. Quarter displays have a 110 fL minimum,
3. G/R and NVG Gain are the measurements for NVIS compatibility in the UK. The values listed are specified at 14 VDC with 28V, 0.15 MSCP lamps. Tests at the Defense Research Agency-Farnborough confirm these results.

LED Display Color Codes

Color	Dominant Wavelength	**Code**
Pure Grn	555 nm	P (T-1 only)
Green	565 nm	G
Amber	585 nm	A
Orange	606 nm	0
Red	639 nm	R
Ultra Red	660 nm	U (T-1 only)

Color Codes continued

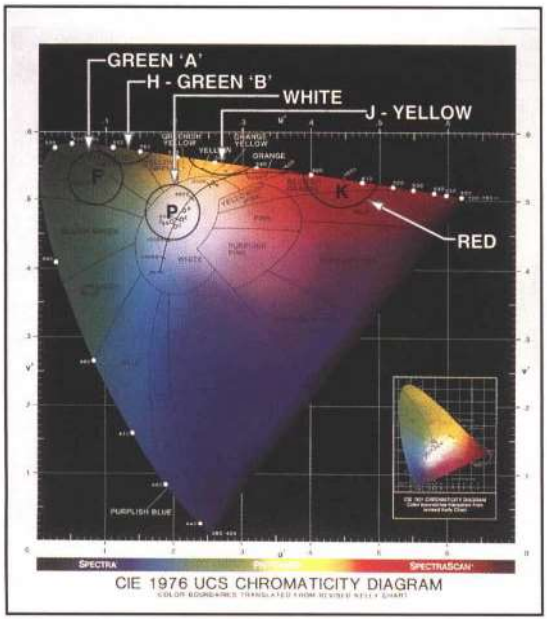

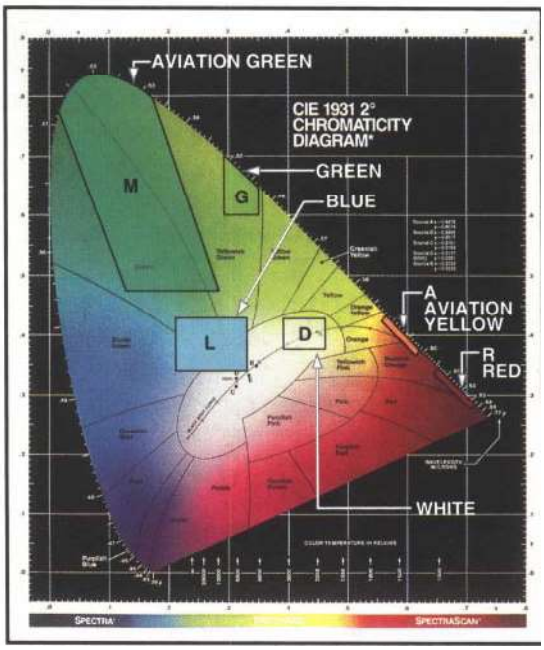

CIE Diagrams provided courtesy Photo Research.

Character Font and Height Codes

58211A4B21C1D2F4L5N2(GR),**P12,**16 ON/OFF

The letter "P" and the digits following it identify the font style and character height to be used for the legend nomenclature.

Letter Style	Font#	Character Height	Letters per Full row [2]	Letters per Half Row [3]	Code
Helvetica Medium[1]	1	0.093 (2.4 mm)t	7	3	P11
Helvetica Medium	1	0.125 (3.2 mm)	5	2	P12
Helvetica Medium Bold [4]	1	0.125 (3.2 mm)	5	2	P12B
Helvetica Medium Condensed	2	0.093 (2.4 mm)	8	3	P14
Helvetica Medium Condensed	2	0.125 (3.2 mm)	6	2	P16
Helvetica Med Condensed Bold [4]	2	0.125 (3.2 mm)	6	2	P16B
DIN 1451/17	4	0.125 (3.2 mm)	4	2	P18
DIN 1451/17 Bold [4]	4	0.125 (3.2 mm)	4	2	Pi
813					
DIN 1451/17 Condensed	5	0.125 (3.2 mm)	6	2	P19
DIN 1451/17 Condensed Bald	5	0.125 (3.2 mm)	6	2	P19B
Futura Medium	7	0.125 (3.2 mm)	5	2	P20
Futura Medium Bold [4]	7	0.125 (3.2 mm)	5	2	P20B
Futura Medium Condensed	8	0.125 (3.2 mm)	6	2	P21
Futura Med Condensed Bold [4]	8	0.125 (3.2 mm)	6	2	P21 B

1. Default letter style and height. Allows two rows of text per half (N2) display, larger heights only allow one row of text.
2. Average for a full width N1 or N2 display. Each legend will vary based on the actual letters used.
3. Average for a half width N3. N11, N12. N13. N14 or N15 display. Each legend will vary based on the actual letters used.
4. 15% wider character stroke width. Recommended far better off-angle viewing and lighted background displays.

Legend Configuration Codes

58211A4B21 C1 D2F4L5N2(GR),P12,**16** ON/OFF

The two digits following the second comma identify the legend configuration. Legend configurations are listed below. The .093 inch (2.4 mm) character height is shown.

The legend itself must be written out as part of the catalog number when ordering a switch or indicator. The legend information required is added to the catalog number after the legend configuration, using commas between rows of characters and a diagonal slash to indicate where the split is. When specifying a split, the order in which the nomenclature is written is upper left, upper right, lower left, and lower right (the same convention as used in the color designation). See examples below.

Horizontal Rows of Letters (6 characters or spaces per row 0.093" high)

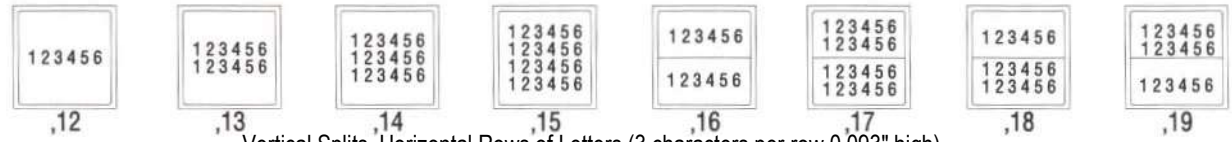

Vertical Splits, Horizontal Rows of Letters (3 characters per row 0.093" high)

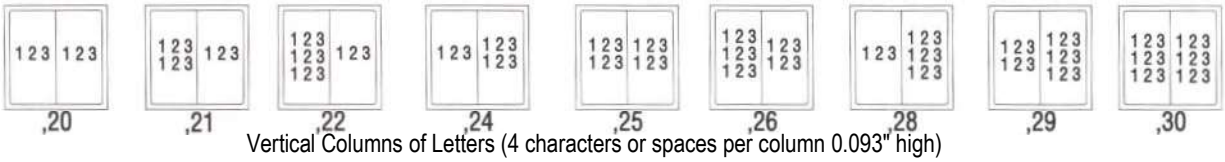

Vertical Columns of Letters (4 characters or spaces per column 0.093" high)

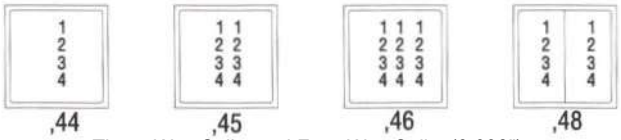

Three-Way Splits and Four-Way Splits (0.093")

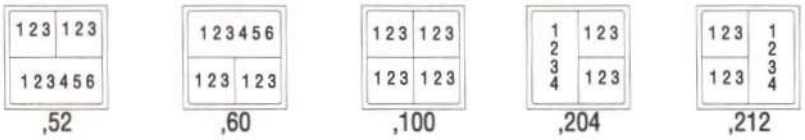

Legend Nomenclature

58211A4B21 C1 D2F4L5N2(GR),P12.16 **ON/OFF**

The legend nomenclature must be written out as part of the catalog part number when ordering a switch or indicator. The legend is appended to the catalog part number after the legend configuration code. Commas are used between rows of characters and a slash is used to identify legend splits. When specifying a legend with a split, the order for the nomenclature is upper left, upper right, lower left and lower right. Examples are listed below.

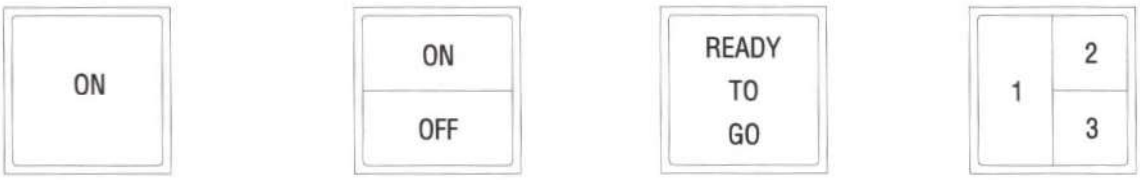

Series 582 Plug-In Mounting Sleeves with Connector Block

After the switch has been inserted in the panel, this sleeve slides over the behind panel portion of the switch and is secured by tightening the pawl. When switch removal is necessary, access to both the front and rear of the panel is required.

582 RE1 for M24317/11 **Connector Pins**

			Panel Thickness (± 0.010 inches (0.3 mm))											
Switch Length	**Code**	Panel Spacer	0.032 (0.8)	DIM A	0.063 (1.6)	DIM A	0.090 (2.3)	DIM A	0.125 (3.2)	DIM A	0.190 (4.8)	DIM A	0.250 (6.4)	DIM A
Short	582-R1	None	-011	1.911	-012	1.880	-013	1.853	-014	1.818	-015	1.753	-016	1.693
Basic	582-RE1	None	-021	2.121	-022	2.090	-023	2.063	-024	2.028	-025	1.963	-026	1.903
Diaphragm	582-RD1	None	-031	1.866	-032	1.835	-033	1.808	-034	1.773	-035	1.708	-036	1.648
Short	582-R1	0.100 (2.5 mm) Gold*	-111	1.811	-112	1.780	-113	1.753	-114	1.718	-115	1.653	-116	1.593
Basic	582-RE1	0.100 (2.5 mm) Gold*	-121	2.021	-122	1.990	-123	1.963	-124	1.928	-125	1.863	-126	1.803
Short	582-R1	0.100 (2.5 mm) Black*	-211	1.811	-212	1.780	-213	1.753	-214	1.718	-215	1.653	-216	1.593
Basic	582-RE1	0.100 (2.5 mm) Black*	-221	2.021	-222	1.990	-223	1.963	-224	1.928	-225	1.863	-226	1.803

*Gold = Gold chemical film for RFI applications

*Black = Black anodize

582 RE5 for M39029/22-192 **Connector Pins**

			Panel Thickness (± 0.010 inches (0.3 mm))											
Switch Length	**Code**	Panel Spacer	0.032 (0.8)	DIM A	0.063 (1.6)	DIM A	0.090 (2.3)	DIM A	0.125 (3.2)	DIM A	0.190 (4.8)	DIM A	0.250 (6.4)	DIM A
Short	582-135	None	-011	1.911	-012	1.880	-013	1.853	-014	1.818	-015	1.753	-016	1.693
Basic	582-RE5	None	-021	2.121	-022	2.090	-023	2.063	-024	2.028	-025	1.963	-026	1.903
Diaphragm	582-RD5	None	-031	1.866	-032	1.835	-033	1.808	-034	1.773	-035	1.708	-036	1.648
Short	582-1115	0.100 (2.5 mm) Gold*	-111	1.811	-112	1.780	-113	1.753	-114	1.718	-115	1.653	-116	1.593
Basic	582-RE5	0.100 (2.5 mm) Gold*	-121	2.021	-122	1.990	-123	1.963	-124	1.928	-125	1.863	-126	1.803
Short	582-115	0.100 (2.5 mm) Black*	-211	1.811	-212	1.780	-213	1.753	-214	1.718	-215	1.653	-216	1.593
Basic	582-RE5	0.100 (2.5 mm) Black*	-221	2.021	-222	1.990	-223	1.963	-224	1.928	-225	1.863	-226	1.803

*Gold = Gold chemical film for RFI applications

*Black = Black anodize

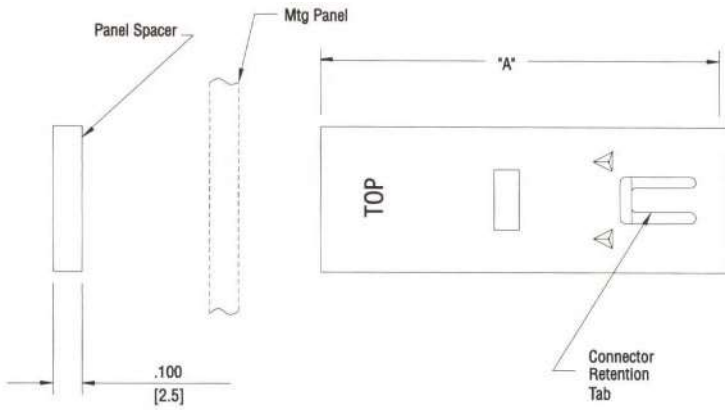

RE1 TYPE

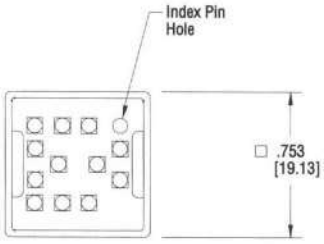

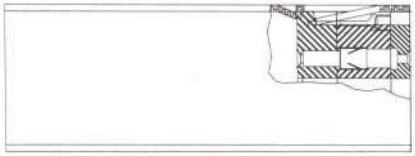

RE5 TYPE

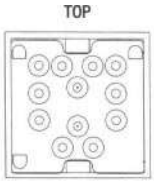

Series 582 Snap-On Mounting Sleeves with Connector Block

Snap-On Mounting Sleeve 582-R6-# and 582-RE6-# for M39029/22-192 Connector Pin

In the snap-on version, the 582-RE5 sleeve is modified to provide a positive stop above panel, leaving part of the sleeve protruding above the panel. Two versions are available, one with a 0.125 inch protrusion above panel and one with a flush mount. The sleeve is installed and retained by a snap-on clip assembled from the rear of the panel. The sleeve assembly remains loosely attached to the panel until the switch is inserted and tightened, creating a rigid mounting. The switch is removable from the front of the panel, rear access is not required. Not available for use with the EMI/RFI option or drip-proof seal and spray-tight seal switches. Contact the factory customer sevice center for addtional information.

582 RE3 for M24317/11 Connector Pins

				Panel Thickness (± 0.010 inches (0.3 mm))					
Length	Height Above Panel	Dim "L"	**Code**	0.032 (0.8)	0.063 (1 .6)	0.090 (2.3)	0.125 (3 2)	0.190 (4 8)	0.250 (6 4)
Short	0.125	2.02	**582-R6**	N/A	N/A	-003	-004	N/A	N/A
Basic	0.125	2.32	**582-RE6**	N/A	N/A	-003	-004	N/A	N/A
Short	0.040	2.02	**582-R6**	N/A	N/A	-103	-104	N/A	N/A
Basic	0.040	2.32	**582-RE6**	N/A	N/A	-103	-104	N/A	N/A

582 RE6 for M39029-192/11 Connector Pins

				Panel Thickness (± 0.010 inches (0.3 mm))					
Length	Height Above Panel	Dim "L"	**Code**	0.032 (0.8)	0.063 (1.6)	0.090 (2.3)	0.125 (3 2)	0.190 (4 8)	0.250 (6 4)
Short	0.125	2.02	**582-R6**	N/A	N/A	-003	-004	N/A	N/A
Basic	0.125	2.32	**582-RE6**	N/A	N/A	-003	-004	N/A	N/A
Short	0.040	2.02	**582-R6**	N/A	N/A	-103	-104	N/A	N/A
Basic	0.040	2.32	**582-RE6**	N/A	N/A	-103	-104	N/A	N/A

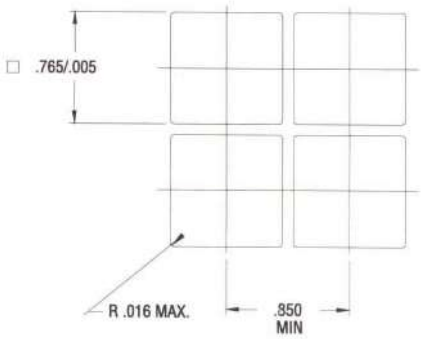

Snap-On Panel Cutout

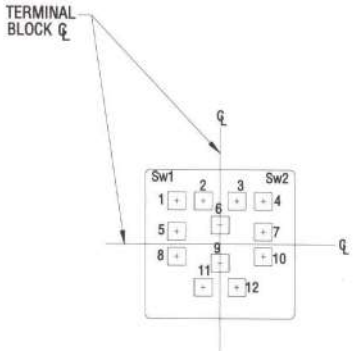

Terminal Block

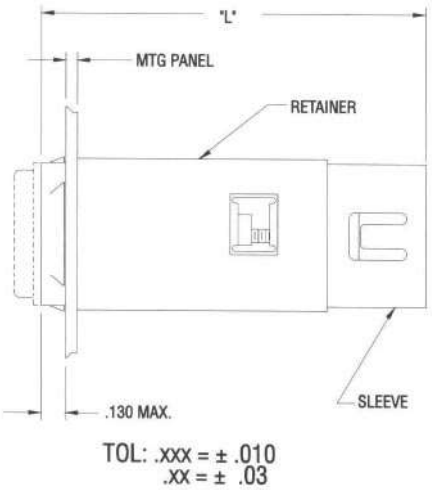

Snap-On Mounting Sleeve

Series 582 Matrices

Series 582 matrices are modular units in which switches and indicators can be mounted. The maximum square matrix is 5 X 5 and the maximum rectangular matrix is 5 X 10. Contact the factory service center for information on other configurations. Wire terminals and installation tools are listed on page 19.

Bezel Matrix 582-REWYxxxx

The bezel matrix has a black colored bezel and is inserted through the front of the panel. Matrix selection must be coordinated with switch length. Fasteners are inserted into slots in the matrix after the matrix has been inserted into the panel and are tightened to secure the unit. Once mounted, the switches are removable from the front of the panel. Rear access is not required. Not available with the diaphragm seal version.

Code	Identifies	Codes
582-REWY0203	Matrix length	Use **REWY** for basic units, RWY for short
582-REWY0203	No. of units per horizontal row	Two digits
582-REWY0203	No. of units per vertical column	Two digits

Bezel Matrix Dimensions

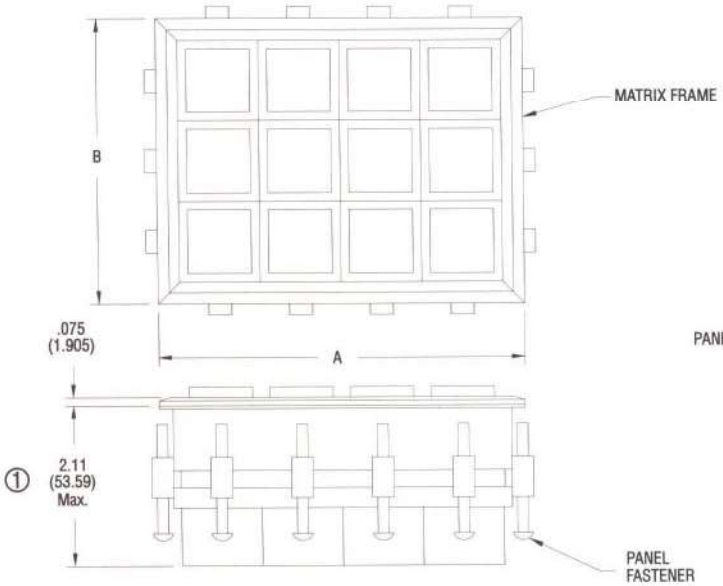

Caution

To prevent overheating due to heat generated by the lamps, one of the following means of dissipating heat will be required:
A. Reduction of operating voltage
B. Increased air circulation
C. Intermittent (flashing) operation

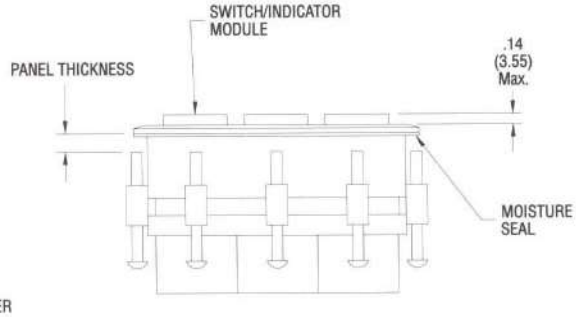

① STANDARD LENGTH 2.11 IN. MAX., SHORT LENGTH 1.90 IN. MAX.

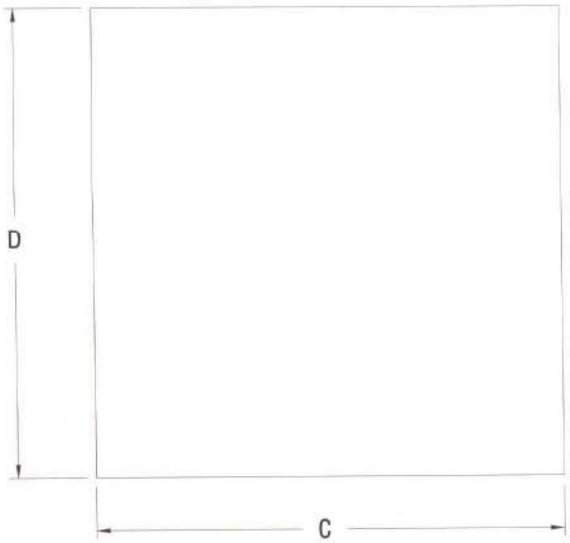

Recommended Panel Cutout

TABLE: DIMENSIONS

NUMBER OF STATIONS	MATRIX ±.020(.51)		RECOMENDED PANEL CUTOUT +.030 -.000 (.76)		NUMBER OF FASTENERS PER SIDE
	A	B	C	D	
1	1.150 (29.21)	1.150 (29.21)	.985 (25.02)	.985 (25.02)	1
2	1.908 (48.46)	1.908 (48.46)	1.740 (44.20)	1.740 (44.20)	1
3	2.663 (67.64)	2.663 (67.64)	2.495 (63.37)	2.495 (63.37)	2
4	3.418 (86.82)	3.418 (86.82)	3.250 (82.55)	3.250 (82.55)	2
5	4.173 (106.00)	4.173 (106.00)	4.005 (101.73)	4.005 (101.73)	2
6	4.928 (125.17)	4.928 (125.17)	4.760 (120.90)	4.760 (120.90)	2
7	5.683 (144.35)	5.683 (144.35)	5.515 (140.08)	5.515 (140.08)	3
8	6.438 (163.53)	6.438 (163.53)	6.270 (159.26)	6.270 (159.26)	3
9	7.193 (182.70)	7.193 (182.70)	7.025 (178.44)	7.025 (178.44)	3
10	7.948 (201.88)	7.948 (201.88)	7.780 (197.61)	7.780 (197.61)	4

Series 582 Matrices continued

Flange Matrix 582-REXxxxx-.xxx

The flange matrix mounts from the rear of the panel and is secured with screws (not included). Flange mount matrices are RFI compatible, but are not supplied in a drip-proof or diaphragm seal versions. Matrix selection must be coordinated with switch length. Letters in the part number are omitted if the feature is not required. Switches are removable from the front of the panel, rear access is not required.

Code	Identifies	Codes
582-REX0203-.125	Matrix length	Use REX for basic units, RX - for short units
582-REX0203-.125	No. of units per horizontal row	Two digits
582-REX0203-.125	No. of units per vertical column	Two digits
582-REX0203-.125	Panel thickness	Std thicknesses: 0.063 (1.6), 0.090 (2.3), 0.125 (3.2) 0.190 (4.8)

Flange Matrix Dimensions

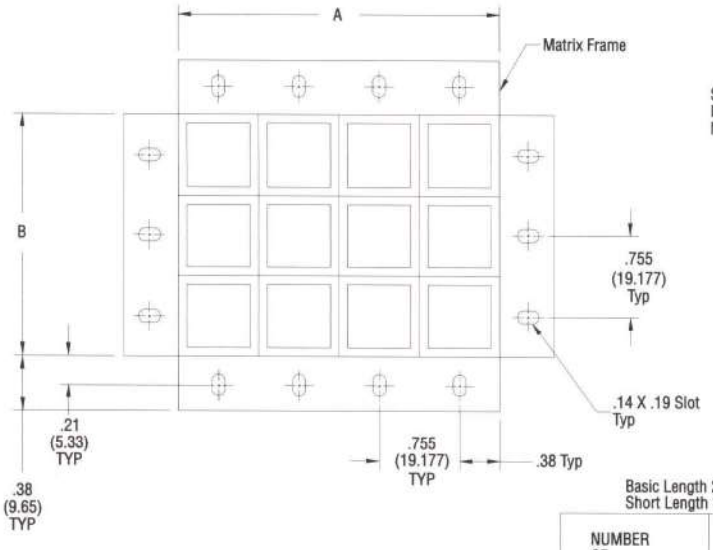

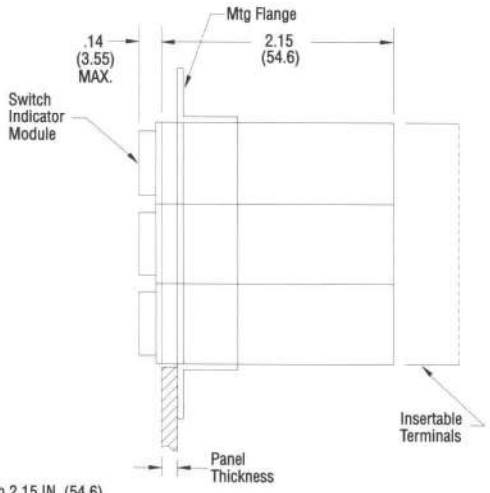

Basic Length 2.15 IN. (54.6)
Short Length 1.94 IN. (49.3)

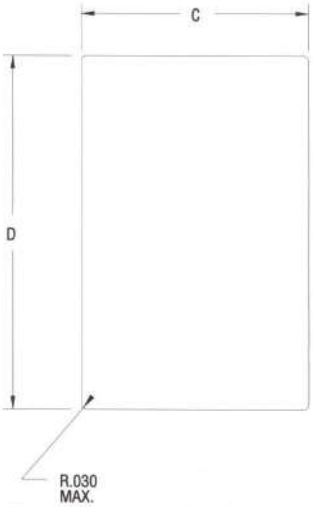

Recommended Panel Cutout

NUMBER OF STATIONS	MATRIX ±.015		RECOMMENDED PANEL CUTOUT +.030/-.000	
	DIM A	DIM B	DIM C	DIM D
1	.755 (19.18)	.755 (19.18)	.775 (19.69)	.775 (19.69)
2	1.510 (38.35)	1.510 (38.35)	1.530 (38.86)	1.530 (38.86)
3	2.265 (57.53)	2.265 (57.53)	2.285 (58.04)	2.285 (58.04)
4	3.020 (76.71)	3.020 (76.71)	3.040 (77.22)	3.040 (77.22)
5	3.775 (95.89)	3.775 (95.89)	3.795 (96.39)	3.795 (96.39)
6	4.530 (115.06)	4.530 (115.06)	4.550 (115.57)	4.550 (115.57)
7	5.285 (134.24)	5.285 (134.24)	5.305 (134.75)	5.305 (134.75)
8	6.040 (153.42)	6.040 (153.42)	6.060 (153.92)	6.060 (153.92)
9	6.795 (172.59)	6.795 (172.59)	6.815 (173.10)	6.815 (173.10)
10	7.550 (191.77)	7.550 (191.77)	7.570 (192.28)	7.570 (192.28)

FOR LARGER SIZES CONSULT MANUFACTURER

TOL: .XXX = ±.010
.XX = ±.03

Caution: To prevent overheating due to heat generated by the lamps, one of the following means of dissipating heat will be required:
A. Reduction of operating voltage
B. Increased air circulation
C. Intermittent (flashing) operation

Series 582 Rod Mount Hardware

The rod mount system allows for units to be mounted in the smallest allowable space by using a system of rods and plates to hold the switch/indicator units together and fasten them to the mounting panel. Not released for production at time of publication. Contact the factory customer service center for information.

582-REMxxxx-.xxx

Code	Identifies	Codes
582-REM0303-.125	Matrix length	Use REM for basic units, RM for short units
582-REM0303-.125	No. of units per horizontal row	Two digits
582-REM0303-.125	No. of units per vertical column	Two digits
582-REM0303-.125	Panel thickness	Std sizes: 0.063 (1.6), 0.090 (2.3), 0.125 (3.2)

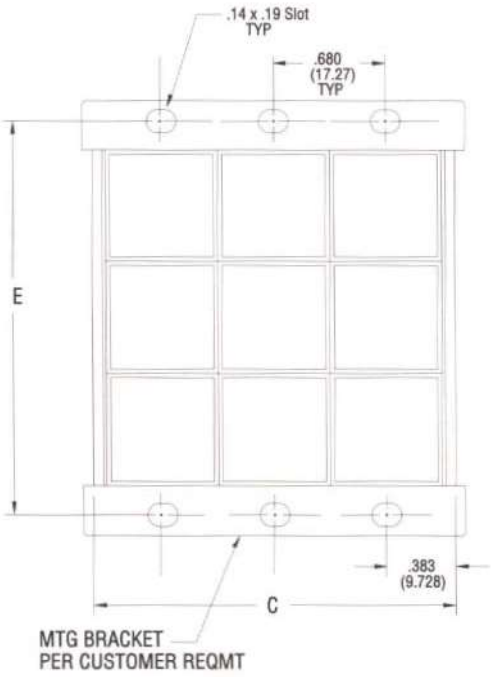

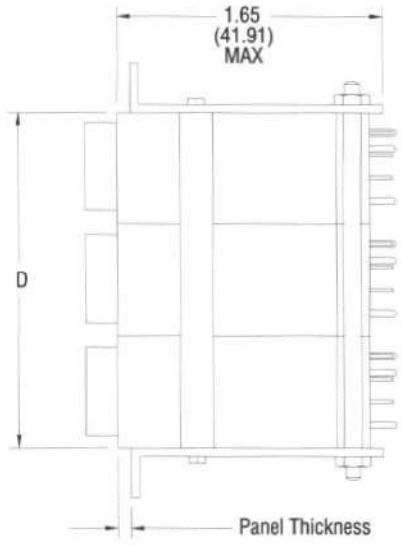

3 X 3 SHOWN
(HORIZ X VERT)

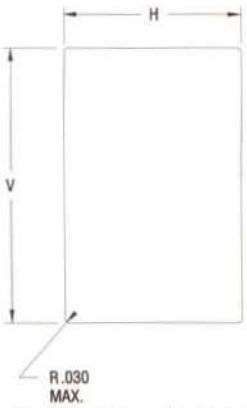

Recommended Panel Cutout

NUMBER OF STATIONS	RECOMMENDED PANEL CUTOUT +.030/-.000		MATRIX ±.025		
	DIM H	DIM V	DIM C	DIM D	DIM E
1	.700	.700	.766	.680	1.104
2	1.380	1.380	1.446	1.360	1.784
3	2.060	2.060	2.126	2.040	2.464
4	2.740	2.740	2.806	2.720	3.144
5	3.420	3.420	3.486	3.400	3.824
6	4.100	4.100	4.166	4.080	4.504

FOR LARGER SIZES CONSULT MANUFACTURER

TOL: .XXX = ±.010
.XX = ±.03

Caution: To prevent overheating due to heat generated by the lamps, one of the following means of dissipating heat will be required:
A. Reduction of operating voltage
B. Increased air circulation
C. Intermittent (flashing) operation

Spare Parts

Lamps	582-F#	(See Pages 11, 12)
Capsule	582-##C#F#L#N#(#),P##,##	(See Pages 9 thru 15)
Body	582-##A#B#C#	(See Pages 9, 10)
Mounting Hardware	582-##D##	(See Page 10)
Panel Seal and Retainer, Black	582-515-1	
Panel Seal and Retainer, Stainless Steel	582-515-2	
Capsule Seal	582-507	
Frame Matrix Fastener	582-526	
Connector Block	582-504	

Accessories

Molycote 33 Lubricant, Light Grade, 1 gram tube	58A-101
Connector Pin, M24317/11, Crimp Style, 1 ea,20-24 AWG	58A-102-1
Connector Pin, M24317/11-905, 25 ct, 20-24 AWG	58A-102-2
Connector Pin, M24317/11, Wire Wrap, 1 ea, 20-24 AWG	58A-103-1
Connector Pin, M24317/11-901, 25 ct, 20-24 AWG	58A-103-2
Connector Pin, M39029/22-192, Crimp Style, 1 ea, 20-24 AWG	58A-111-1
Connector Pin, M39029/22-192, Crimp Style, 25 ct, 20-24 AWG	58A-111-2
Clear Plastic Switchguard	58A-104
Wire Switchguard, Black	58A-105-1
Wire Switchguard, Red	58A-105-2

Installation and Removal Tools

Lamp Capsule Removal Tool	58T-101
Connector Pin Crimp Tool	58T-103
Connector Pin Removal Tool	58T-104
Connector Pin Removal Tool Tip for 58T-105-1	58T-105-2
Connector Pin Removal Tool, Extended	58T-105-1
Torque Screwdriver	58T-106
Connector Block Removal Tool	58T-107

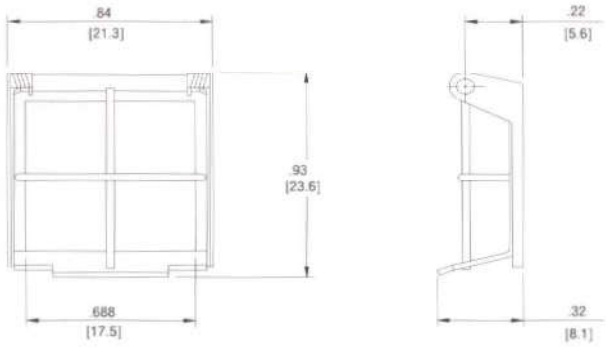

Wire Switch Guard
Not For Use With Matrices
Individual Mount Only

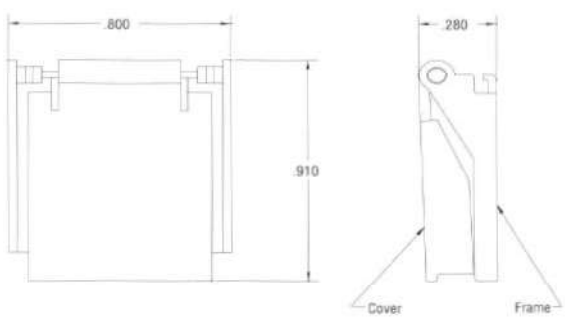

Clear Plastic Switch Guard
Not For **Use With Matrices**
Individual Mount Only

Part Number Specification Sheet

The Part Number Specification Sheet and accompanying Quick Reference Specification Tables have been created to streamline your selection of standards and features for the Series 582. For an in-depth description of this material, refer to pages 7-13.

Project

Customer

Submitted By

Customer Code

	Unit Options	Basic Unit	Termination	Lamp Circuit	Panel Thickness	Lamp Type	Display Screen	Display Configuration	Display Color	Character Font/Height	Legend Configuration	Legend Nomenclature
Table	**1**	**2**	**3**	**4**	**5**	**6**	**7**	**8**	**9**	**10**	**11**	**12**
582	11	A4	B12	C1	D2	F4	L5	N2	(GR)	,P12	,16	on/off
582												
582												
582												
582												
582												
582												
582												
582												
582												
582												

Notes/Comments