Accessories for EURO/SR, FULL SIZE, ESPORT and NGR Rockers

DIMENSIONS APPROXIMATE IN MM (INCHES)

ESPORT CONNECTOR

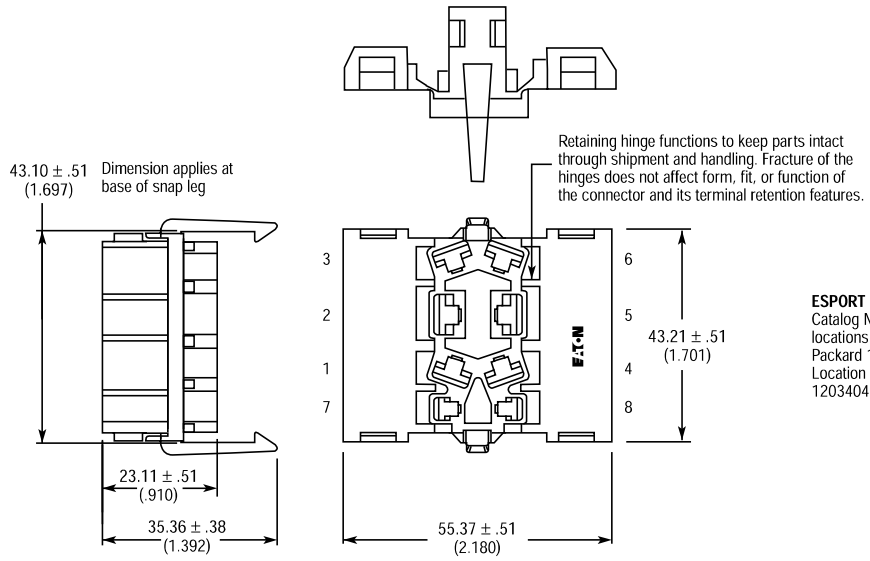

ESPORT Connector
Catalog Number **28-5558**
locations 1, 2, 3, 4, 5, and 6 accept Packard 12015870 Metri-Pack Terminals. Location 7 And 8 accept Packard 12034046 Metri-Pack Terminals.

NGR CONNECTOR

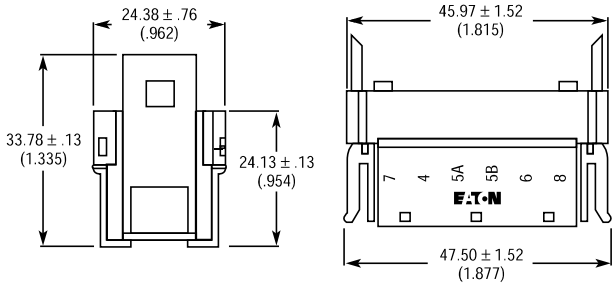

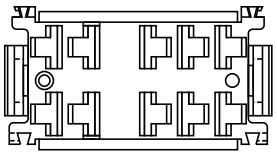

NGR Connector
Catalog Number **28-5637-2** accepts Packard 12015870 Metri-Pack Terminals or AMP compatible connector **28-5940** accepts AMP terminals 42100-2.

EURO-LOOK AND EURO/SR CONNECTOR

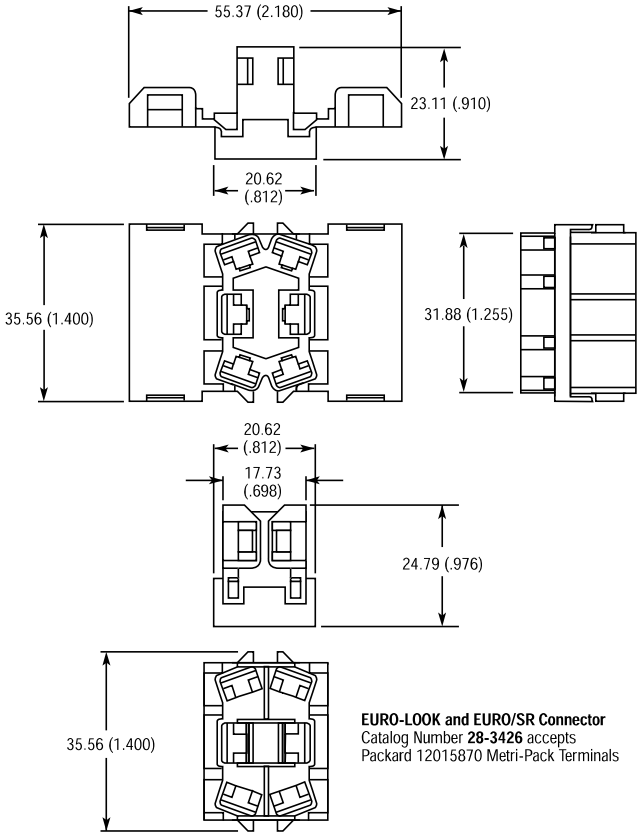

EURO-LOOK and EURO/SR Connector
Catalog Number **28-3426** accepts Packard 12015870 Metri-Pack Terminals