ELECTROSWITCH
•ELECTRONIC PRODUCTS
UNIT OF ELECTRO SWITCH CORP.

500 SERIES MAGNETIC ENCODERS

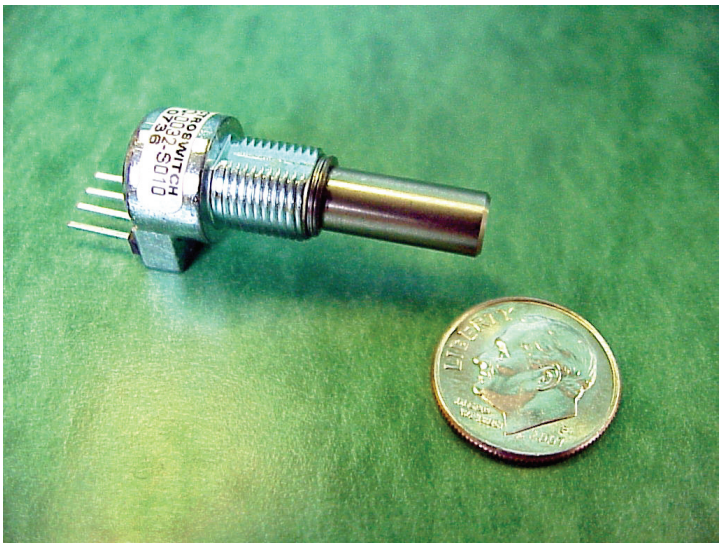

The Electroswitch 500 Series Magnetic Encoders are built upon a contact free integrated circuit design. This encoder integrates Hall Effect sensing and digital signal processing to provide high-resolution angular measurement solutions.

An important advantage of the 500 Series is the dramatic reduction in package size to ½ inch, while still incorporating the performance and output options required to support the widest range of industrial and motion sensing applications.

The 500 Series design leverages its reduced part count and simplified construction to provide extremely robust, high shock and vibration resistant performance, excelling in harsh and dirty environments.

FEATURES

- Compact, Robust, 1/2" package
- High Resolution Encoding up to 1024 PPR
- Widest Temperature Range
- Absolute and Incremental Outputs
- Zero Reference Positioning
- Tachometer with Direction Sensing
- Quadrature Code Output
- RoHS Compliant
- Contact Free Magnetic Design
- 3.3 or 5.0 VDC Options

BENEFITS

- Compact Size
- Multiple Output Codes Allowing Simpler Integration With a Wider Variety of Receiving Devices
- Best Encoder Reliability
  - Longest Life
  - Excellent Performance in Harsh Environments
- Low Power Consumption

APPLICATIONS

MOTOR CONTROL DEVICES

Control of motor circuits is accomplished by linking encoder to motor shaft

- Material Handling Equipment
- Machine Tools
- Conveyor Belts
- Printing Equipment
- Elevators
- Factory Automation

FLOW CONTROL DEVICES

Fluid flow can be metered by the encoder attached to displacement turbine and other styles of meters and pumps

- Manufacturing Process Controls
- Valve and Flow controls
- Fuel Pumps

AUDIO / ENTERTAINMENT

Frequency Select for Professional and High End Audio Applications

- Mixing Consoles
- High End Amplifiers
- Lighting Controls (intensity select)

AVIONICS

- Altitude Positioning
- Missile Firing and Guidance
- In-flight Refueling
- Auto Pilot Controls

MEDICAL

- Infusion Pump Flow
- Dispensing Equipment
- Automated Vial Sampling Equipment
- Dialysis Machines
- Ventilators

INDUSTRIAL POSITION SENSING AND POSITION CONTROL

- Off Road / Construction Equipment
- Lift Trucks
- Welding Machines

WWW.ELECTRO-NC.COM
2010 Yonkers Road Raleigh, NC 27604 • tel: 1.888.768.2797 or 919.833.0707
fax: 800.909.9171 or 919.833.8016 • sales@electro-nc.com

Mechanical Drawings

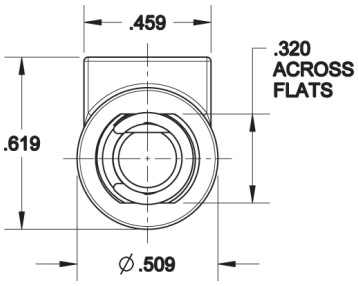

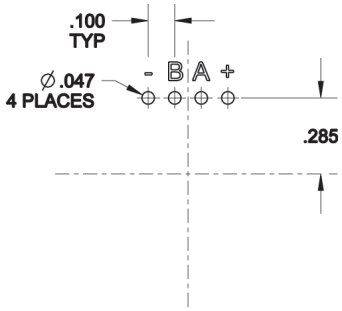

MOUNT FOOTPRINT

Quadrature Pinout Shown.
(Consult factory for Additional Pinouts)

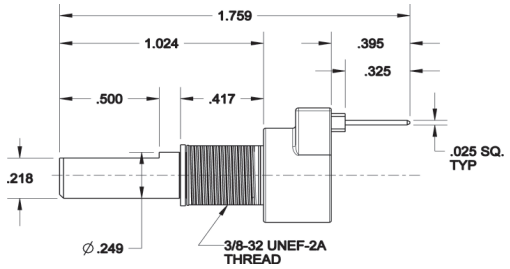

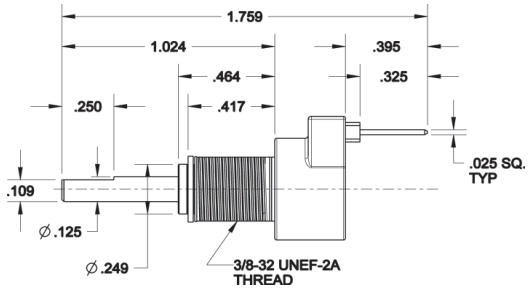

Specifications

Electrical Specifications

Operating Voltage	4.7 to 5.7 VDC or 3.3 to 3.8 VDC
Supply Current	[30 mA Max]
Logic output	VCC High; 0.4 Low
Power Consumption	165mW max.

Codes:

Quadrature	32, 64, 128 or 256 PPR
Tachometer	64, 128, 256, 512 PPR (w/ direction)
Absolute	10 bit PWM (1024 PPR) *
Quadrature	32, 64, 128 or 256 PPR w/ Z channel*

Frequency [fixed] 1 µs

Environmental Specifications

Operation Temperature	-40C to +105C
Storage Temperature	-55 C to +125C
Humidity	MIL STD 202G Method 103B Condition A or Higher

Mechanical Specifications

Mechanical Vibration
Harmonic motion with amplitude of 15g, varied from 10 to 2000 Hz for 12 hours, per MIL STD 202G Method 204D Condition B or Higher

Mechanical Shock
100g for 6 ms half sine wave with velocity change of 12.3 ft/s, per MIL STD 202G Method 213B Condition C or Higher

Life cycles:	10M w/ sleeve bearing
Operational speed:	200 rpm max w/ sleeve bearing
Weight:	0.5 oz.

Materials:

Housing:	Zinc Die Cast Alloy
Shaft:	Stainless Steel
Terminal:	Tin Plated

NOTE: Mounting Hardware Included

Standard Sealing: Limited Dust and Water Ingress Protection

Ordering Information

50 ☐ ☐ - ☐☐☐☐ - ☐ ☐☐ ☐

Voltage:
5= 5 VDC

Output:
Q= Quadrature
T= Tachometer w/ direction

Resolution / PPR:
Quadrature: 0032, 0064, 0128, 0256
Tachometer 0064, 0128, 0256, 0512 (Tachometer)

Sealing:
S=Standard

Shaft Diam:
01 = .250
02 = .125

Termination:
0= Straight Pins

*Additional Options

Voltage:
3= 3.3VDC

Output:
A= Absolute (10 bit PWM)
Z= Quadrature w/ Z channel

Resolution / PPR:
Absolute: 1024
Quadrature w/ Z: 0032, 0064, 0128, 0256

Sealing:
P= Panel Seal
I=IP67

Termination:
4= 4" Cable & Connector

Example Part #
505Q-0256-S010 = 500 Series Encoder, 5 volt, Quadrature, 256, no additional sealing, ¼" diam. shaft, w/ straight pins
***Additional Options:** Contact Electroswitch for Lead-times and Minimum Order Requirements
Customization can include: Modified Shaft Lengths and Flats - Cabling Options

Technical Data August 2007 - All Information subject to change without notice

 ©Copyright Electroswitch 2007

ELECTROSWITCH
•ELECTRONIC PRODUCTS
UNIT OF ELECTRO SWITCH CORP.

700 SERIES MECHANICAL ENCODERS

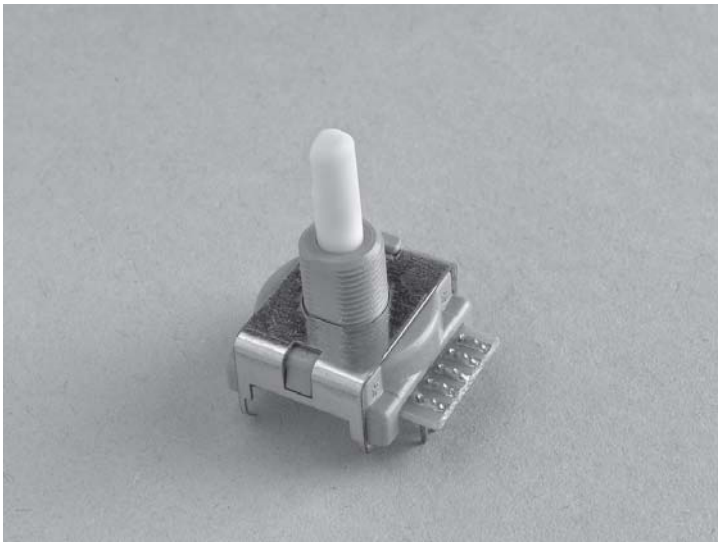

The Electroswitch 700 Series is the economical solution to virtually any digital encoder or potentiometer requirement. As the latest version in our new generation of rotary encoder products, the 700 Series has been freshly tooled to include resistive analog output for potentiometer applications, as well as the standard digital code for direct interface with a microprocessor. The .890" package enhances the original design concept, delivering high performance and quality levels in triple digit PPRs.

FEATURES

- **Digital Codes Available: Incremental Quadrature, Absolute, Gray**
- **Analog Resistive Output For Use As A Potentiometer**
- **5K And 10K Resistive Element Standard**
- **High Temperature Materials Meet 85°C Requirements**
- **Push button Feature**
- **Push to Turn Feature**
- **RoHs Compliant**

BENEFITS

- **Multiple Output Codes Allow Simpler Integration with a Wider Variety of Receiving Devices**
- **Encoder or Potentiometer function in same package**
- **Excellent Performance in Harsh Environments**
- **Push button Allows Dual Function with Single Shaft Input**
- **Low Profile Package**

APPLICATIONS

Medical
- Rehab Treadmills
- X-Ray Equipment
- Cold Therapy/Compression Equipment

Audio/Music
- Volume Control
- Automotive
- Home
- Professional
- Electric Guitars

HVAC
- Temperature Control
- Fan Control

Appliance
- Electronic Range Control of Bake time
- Electronic Range Control of Temperature and Duration
- Dishwasher Control

Agriculture/Construction
- Bailer control for height and speed
- Electronic control interface

Test and Measurement
- Automotive Test Equipment

Panel Input Device
- Menu scroll and select via pushbutton

Timer Setting
- Irrigation controls

Electroswitch Electronic Products • 2010 Yonkers Road • Raleigh, North Carolina
T 888-768-2797 • F 800-909-9171 • www.electro-nc.com

ELECTROSWITCH
•ELECTRONIC PRODUCTS
UNIT OF ELECTRO SWITCH CORP.

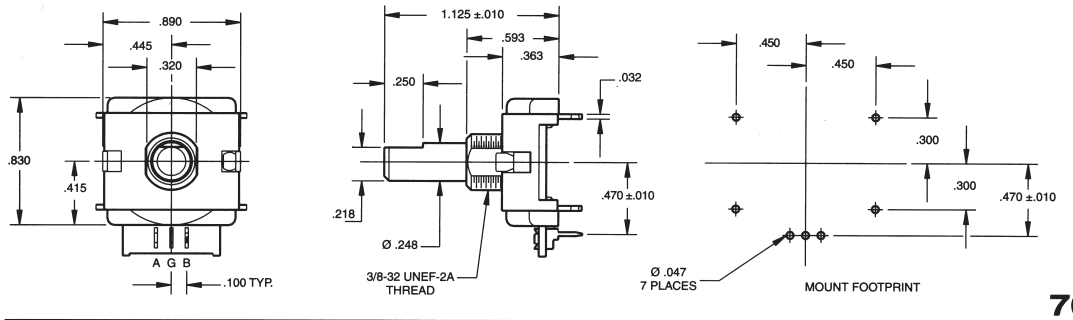

700 Series

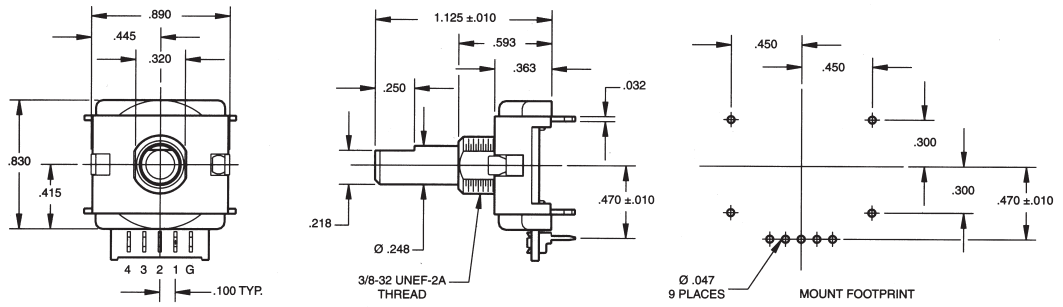

12 or 16 position **702 Series**

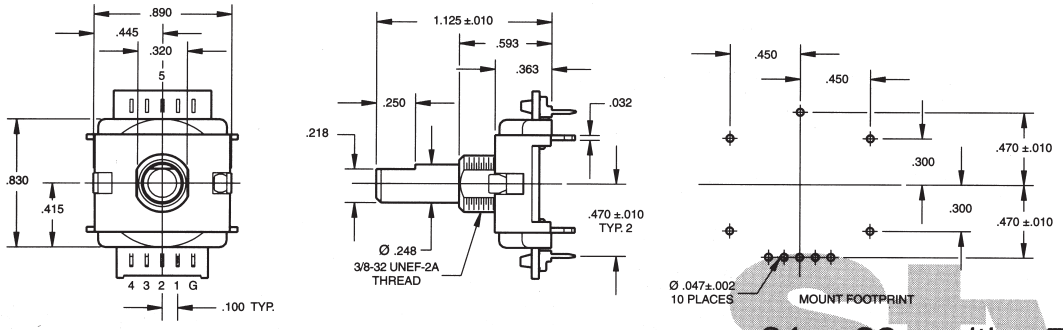

24 or 32 position **702 Series**

Styles

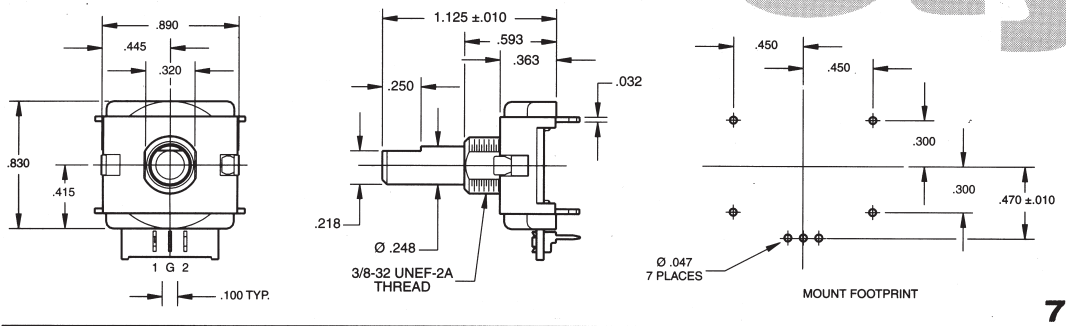

703 Series

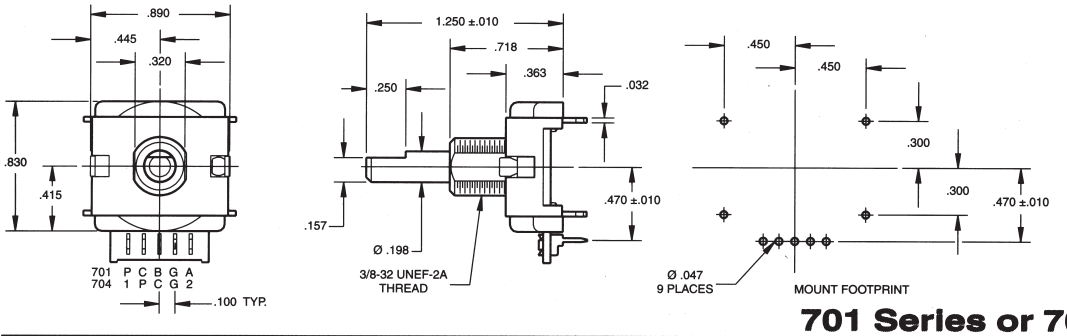

701 Series or 704 Series

Truth and Output Tables

QUADRATURE CODE FULL CYCLE PER DETENT
(12, 16, 24 POSITION)

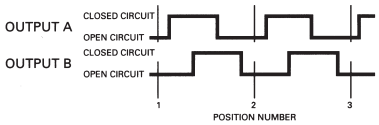

QUADRATURE CODE 1/4 CYCLE PER DETENT
(12,16, 24, 32, OR 36 POSITION)

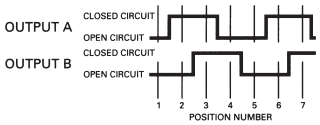

QUADRATURE CODE
FULL CYCLE
12, 16, 24 POSITION

SWITCH POSITIONS	OUTPUT A	OUTPUT B
1		
	•	
	•	•
		•
2		
	•	
	•	•
		•
3		
	•	
	•	•
		•
4		
		•
24		

QUADRATURE CODE
1/4 CYCLE
ALL POSITION

SWITCH POSITIONS	OUTPUT A	OUTPUT B
1		
2	•	
3	•	•
4		•
5		
6	•	
7	•	•
8		•
9		
10	•	
11	•	•
12		•
13		
XX	•	•
36		•

• INDICATES LOGIC HIGH

GRAY CODE
16 POSITION (*)

SWITCH POSITIONS	OUTPUT 1	2	4	8	16
1					
2	•				
3	•	•			
4		•			
5		•	•		
6	•	•	•		
7	•		•		
8			•		
9			•	•	
10	•		•	•	
11	•	•	•	•	
12		•	•	•	
13		•		•	
14	•	•		•	
15	•			•	
16				•	

* - 12 position gray code is the same as a 16 position without positions 11 through 14.

GRAY CODE
32 POSITION (**)

SWITCH POSITIONS	OUTPUT 1	2	4	8	16
17				•	•
18	•			•	•
19	•	•		•	•
20		•		•	•
21		•	•	•	•
22	•	•	•	•	•
23	•		•	•	•
24			•	•	•
25			•		•
26	•		•		•
27	•	•	•		•
28		•	•		•
29		•			•
30	•	•			•
31	•				•
32					•

** - 24 position gray code is the same as a 32 position without positions 21 through 28.

Specifications

Current Carrying Capacity	Resistive 0.5 watt
Switching Load	1mA at 115 VAC, 15mA at 14 VDC
Shock Humidity	MIL-STD 202E
Dielectric Strength	750 volts
Contact Resistance	1 ohm typical
Contact Bounce	5 ms @ 15 RPM
Contacts	Phosphor-bronze gold interface with program board
Codes	Resistive, Quadrature, A/B, Binary, Gray
Code Program	Non-shorting typical
Operating Forces	16 position = 7.5 in.-oz. ±20%, 36 position = 4.5 in.-oz. ±20%
Life	50,000 cycles (50% loss in torque over life. High temperature operation will reduce detent life.)
Operating Temperature	-40°C to +85°C
Shaft Material	Molded plastic
Anti-Rotation Device	Flatted mounting bushing .375" dia. x .320", double "D"

Detent Angles	36°, 30°, 22.5°, 15°, 11.25°, 10°; others upon request
Molded Construction	Valox plastic rated 94 V-O or better
Board Material	FR-4 with 1 oz. copper clad, plated
Push-Button Characteristics	Stroke: .065 ±.015
	Push-Button Force: 15 oz. max.
	Push-Button Resistance: 80 ohms max.
	Torque: 12, 24 position = 1.6 ±.3 in.-oz.
	Torque: 16 position = 2 ±.3 in.-oz.
	Torque: 32, 36 position = 1.2 ±.3 in.-oz.
	Contact Resistance: 5 ohms max.
	Contact Bounces: 5 ms max. @ 15 RPM
	Push-Button Life: minimum 250,000 operations

Ordering Information

Code
- 700: Quadrature
- 701: Quadrature with Push-button
- 702: Absolute
- 703: Resistive
- 704: Resistive with Push-button

Electrical Cycles or Resistive Value
- 700: 06, 08, 09, 12, 16, 24, 32 or 36
- 701: 06, 08, 09, 12, 16, 24, 32 or 36
- 702: 01
- 703: 05K or 10K
- 704: 05K or 10K

Number of Detent Positions
- 700: 12, 16, 24, 32, 36 or 00: No Detents
- 701: 12, 16, 24, 32, 36 or 00: No Detents
- 702: 12, 16, 24, or 32
- 703: 00: No Detents
- 704: 00: No Detents

701 **08** — **32**

700 Series Standard Offerings

700-09-36	701-08-32	702-01-12	703-05-00	704-05-00
700-16-16	701-04-16	702-01-16	703-10-00	704-10-00
700-24-24	701-06-24	702-01-24		

ELECTROSWITCH
ELECTRONIC PRODUCTS
UNIT OF ELECTRO SWITCH CORP.

MM Series Rotary Encoder

Features:

- Robust .865" Square Package
- Strong Electron Welded PC Terminations
- Dual and Tri-Concentric Shaft Option
- Enclosed High Temperature Design
- Push Button Feature Option
- Precious Metal Contacts
- Contacts Insert Molded

Benefits:

- Compact Size
- Easy Insertion into PCB
- Multiple Functions Save Panel Space
- Wave Solder Applications
- Addition of Push button allows Scroll and Select Function
- Long Service Life of over 50,000 cycles with Low Contact Resistance
- Maximum Switch Position Accuracy

MM Series Applications

Avionics:

- Radio Channel Select
- Auto Pilot Select
- Fuel / Air data systems
- Flight Simulators

Communication Equipment:

- GPS—Co-ordinates Input
- Military and Commercial Radio Channel Select

Medical:

- Defibrillators — Voltage Control
- X-Ray Equipment—Intensity Input

Construction / Agricultural Equipment

- Combine Platform Height Select
- HVAC Cab Controls

Test Equipment

- Oscilloscopes—Scale Input Control

Front facing PC terminals option

Electroswitch MM Series

Dual Concentric with optional Pushbutton

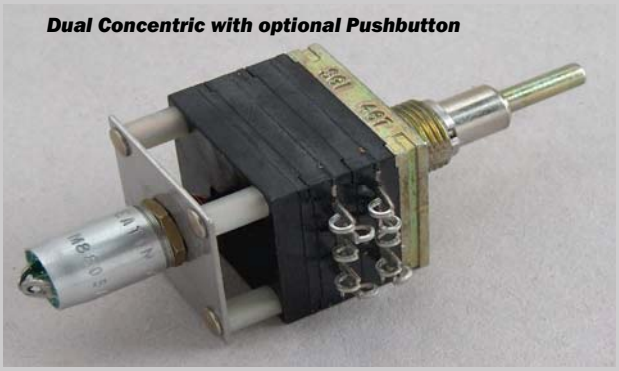

The MM Series represents the best in contemporary rotary technology and reflects the high standards of reliability that have made Electroswitch rotary devices known worldwide. At only .86" square, these compact switches have up to 36 positions and adapt to numerous design requirements.

Durable construction and an enclosed, high temperature resistant design make the MM Series ideal for wave solder applications. Contacts are insert molded in place for lifetime performance and switching accuracy.

Available options include concentric shafts as well as shaft and panel seals. These switches are highly versatile and economically customized. These options help make the MM Series a cost effective solution for a wide range of applications.

Electroswitch Electronic Products • 2010 Yonkers Road • Raleigh, North Carolina 27604
Phone: 888-768-2797 • Fax: 800-909-9171 • sales@electro-nc.com
WWW.ELECTRO-NC.COM

All Information subject to change without notice

Flier EEP–MM RevA ©Copyright Electroswitch 2010

ELECTROSWITCH
ELECTRONIC PRODUCTS
UNIT OF ELECTRO SWITCH CORP.

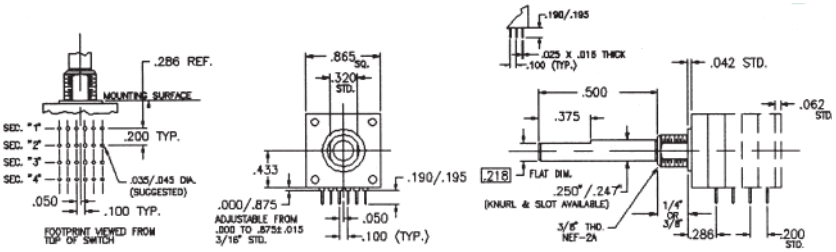

Parallel Shaft Mounting (relative to PC Board)

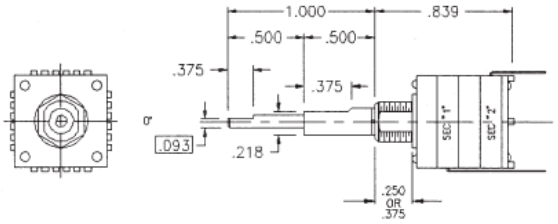

Perpendicular Shaft Mounting (relative to PC Board)

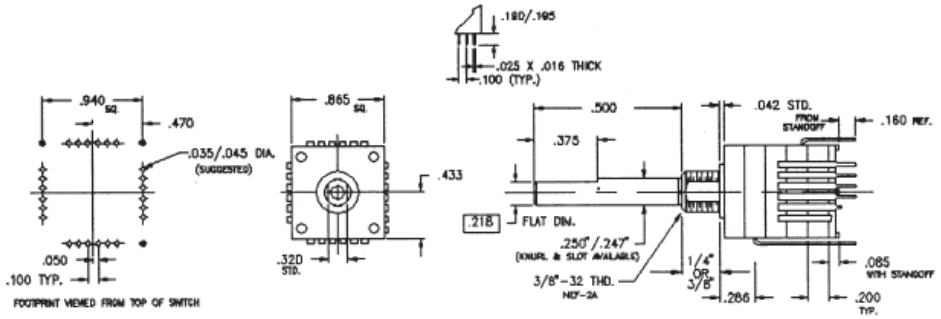

Perpendicular Shaft Mounting (relative to PC Board)

Shaft and Bushing Options			
Suffix	Shaft Diam	Shaft Lgth. From End of Bushing	Bush Lgth
01	.125"	.375"	.250"
02	.125"	.375"	.375"
03	.125"	.500"	.250"
04	.125"	.500"	.375"
05	.125"	.750"	.250"
06	.125"	.750"	.375"
07	.125"	1.00"	.250"
08	.125"	1.00"	.375"
09	.250"	.375"	.250"
10	.250"	.375"	.375"
11	.250"	.500"	.250"
12	.250"	.500"	.375"
13	.250"	.750"	.250"
14	.250"	.750"	.375"
15	.250"	1.00"	.250"
16	.250"	1.00"	.375"

Ordering Information

MM — [ ] [ ][ ] [ ] [ ] — [ ][ ] [ ] [ ] [ ][ ]

Number of Decks	Number of Positions	Code Output:	Termination:	Index Angle	Stop Type	Sealing:	See chart Above for Suffix
		G = Gray Q= Quadrature H = Hexidecimal * B = BCD * * = *optional*	F = Front PC R = Rear PC P = Perpendicular PC L = Solder Lug	90°, 60°,45° 36°, 30° 22.5° 20° 18°, 15° 12.8°, 11.25° 10°	F = Fixed C= Continuous	S = Standard (No Seals) P = Shaft and Panel	

Consult Factory for Additional Available Options

Electrical / Mechanical Specifications

Electrical Specifications

Current Carrying Capacity:	Resistive Load 250 mA at 28 VDC Switching Loads 1.5 mA at 115VAC 150 mA at 14 VDC
Contact Design:	Shorting or Non-shorting (non-shorting version up to 16 positions only)
Dielectric Strength:	From pole to shaft 1,000 volts minimum
Contact Resistance:	75 milliohms maximum over lifetime.
Codes:	Gray, Quadrature, BCD and Hexidecimal Others available for special order

Environmental Specifications

Operation Temperature:	-55°C to +85°C (105°C optional)
Shock / Humidity	MIL STD 202E Method

Mechanical Specifications

Operational Forces:	(Torque over detents): 7 to 20in /oz. ±25%
Stop Strength:	15 in/lb. minimum
Sealing:	Terminals are insert molded into housing. Front and rear molded sections of module are Interlock construction and ideally suited for wave soldering.
Anti-Rotation Device:	Flatted bushing .375" dia. X .320" , double "D"
Concentric Shafts:	Available
Life:	50,000 minimum cycles at rated load
Detent Angles:	90°, 60°,45°36°, 30°, 22.5°, 20°, 18°, 15° 12.8°, 11.25° 10°

Materials (RoHS Compliant)

Shaft and Hardware:	Shafts and Hardware are steel, zinc and chromate treated.
Molded Construction:	Molded parts are Ryton R4 and Polyester PBT, chosen for heat resistance and electrical characteristics. Rated UL 94 V-0 or better
Disc Construction:	Program Disc is glass epoxy, copper clad with silver plating standard. Gold upon request.
Contacts:	Phosphor-bronze with silver inlay at interface with program disc. Gold inlays available upon request. External terminals are tin plated except on die cut edges.

RoHS

Electroswitch Electronic Products • 2010 Yonkers Road • Raleigh, North Carolina 27604
Phone: 888-768-2797 • Fax: 800-909-9171 • sales@electro-nc.com
WWW.ELECTRO-NC.COM

ELECTROSWITCH
•ELECTRONIC PRODUCTS
UNIT OF ELECTRO SWITCH CORP.

Table of Contents

Indicator Lights

Selection Considerations 1
Selection Guide 2
Presslite Switches 4
- Friction Cap 5
- Watertight 12
- Low Profile 13
- Snap-in 15

Optolite Indicators 16
- General Purpose 17
- Watertight 22
- E.M.I. Supressed 25
- Press-to-Test 27

Push-in Indicators 34
Military Cross Reference 35
Lamp Selection Guide 36

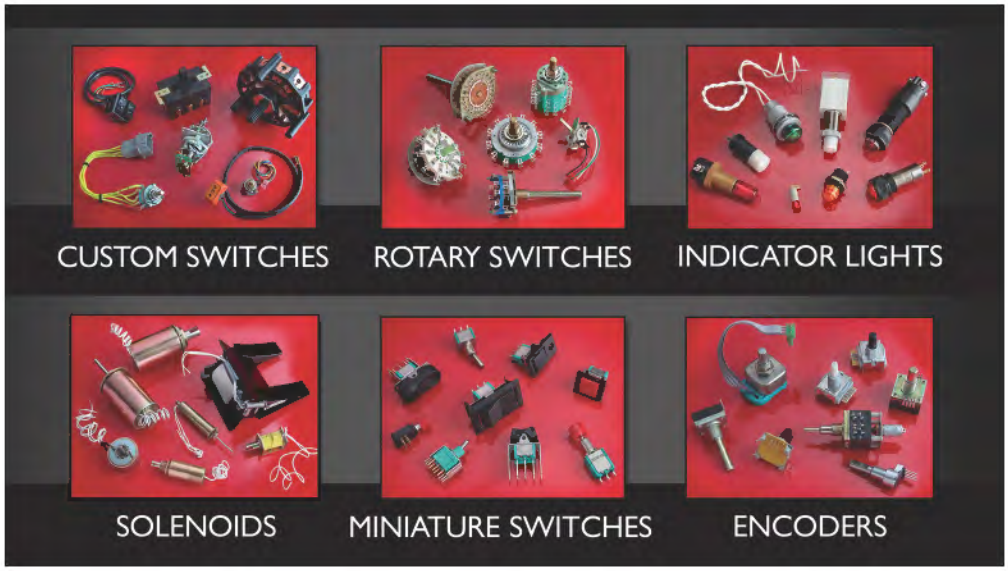

ELECTROSWITCH
•ELECTRONIC PRODUCTS
UNIT OF ELECTRO SWITCH CORP.

Switch Selection Considerations

During more than a quarter century of assisting customers with their Presslite switch requirements, Electroswitch has learned that the best rule is... evaluate before you buy! Test samples of selected switches should be installed in the projected equipment, and should be exposed to actual operating conditions and environments before final procurement.

In evaluation and selection, some general considerations are worth stating which apply to all types of switches. These include...

Over-Specification

Do not specify a higher power switch than is actually required, on the assumption that the higher rating will automatically provide a safety factor and increase its life in the application. It doesn't! In fact, the exact opposite may be true, because of the high mechanical loads necessary to assure adequate contact force. In addition, the necessarily greater contact mass may introduce intolerable "bounce" problems into the overall circuit.

Low Level (Dry Circuit)

Although there is no industry standard definition of low level or dry circuit, and they tend to be used interchangeably, it is generally understood that these terms describe conditions where applied voltage is insufficient to puncture any chemical film which may form over the contacts. So, switch design features to look for in this type of circuit application are:

- Wiping Action, to cut through the film
- Hermetically Sealed Contacts, to provide a controlled atmosphere
- High Contact Pressure, to pierce the film

Lens Color

A broad range of lamp brightness is available for different switch applications. Generally, lenses of white, red, and orange give the greatest apparent brightness for a given lamp. Because of the spectral distribution of the incandescent filament, and the response of the human eye, green is noticeably dimmer; blue should be avoided in many applications.

Where a neon lamp is used, smaller caps are recommended ... in off-white (for greater transparency), red, and orange. Green and blue are not usable.

Standards

Certain styles have been designated as standards. These products generally offer shorter lead times.

Product Support

There are many considerations that must be kept in mind during the switch selection process. Ultimately, the entire process reverts again to the basic rule - evaluate before you buy. Electroswitch has for many years worked with customers to provide just the right switch for the application, be it a standard unit, a slightly modified version, or a special design. The application engineering staff is prepared to discuss special design features and colors at any time to assure switch performance and acceptability in your end product or system.

Presslite Switch

Selection Guide

ELECTROSWITCH
•ELECTRONIC PRODUCTS
UNIT OF ELECTRO SWITCH CORP.

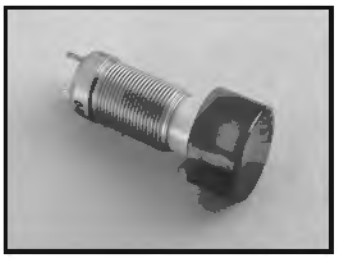

Description	Type	Page Number
Friction Cap Bases		4
3 Amp S.P.D.T. 2 Circuit Form Z	543, 545, 546	5
General Purpose Indicator Base	516, 518	5
5 Amp S.P.D.T. Form C	532	6
5 Amp D.P.D.T. Form C	520, 521	6
10.1 Amp S.P.D.T. Form C	5710, 5810	6
10.1 Amp D.P.D.T. Form C	5720, 5820	7
15 Amp S.P.D.T. Form C	517, 519	7

Pushbutton Cap Selection Cap Key		8
Hardware		
Recess Adaptor		9
Flush Snap-In Mount		10
Barrier Snap-In Mount		10
Specialty Hardware		
Splashproof and Oiltight		11
Splashproof and E.M.I. Supressed		11

Watertight

3 Amp S.P.D.T. 2 Circuit Form Z	643	12

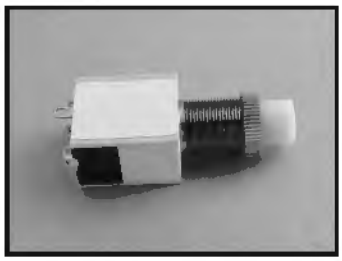

Description	Type	Page Number
Low Profile Switches		
5 Amp Snap Action	416, 616, 418, 618	13
10.1 Amp Snap Action	6710, 6720 6810, 6820	14

Snap-In Switches

.5 Amp	591	15

General Purpose

Sub-Miniature	99-33180	17
Miniature, Neon	31-36180, 31-36280	17
Miniature	11-33480, 59-52480	18
	14-30080	19
13-VM	305, 309	20
Miniature Neon	33-30880, 33-30881	20
Miniature	14-32280	21
Miniature	14-35180	21

Electroswitch Electronic Products • 2010 Yonkers Road • Raleigh, North Carolina
T 888-768-2797 • F 800-909-9171 • www.electro-nc.com

Optolite Indicator

Selection Guide

ELECTROSWITCH
•ELECTRONIC PRODUCTS
UNIT OF ELECTRO SWITCH CORP.

Description	Series	Page Number
Watertight		
Sub-Miniature, Watertight	95-33180	22
Miniature, Neon Watertight	31-36680, 31-36681	22
Miniature, Watertight	11-35182, 15-30083	23
Miniature, Watertight	VM-700	24

E.M.I. Supressed		
Sub-Miniature, Optional E.M.I. Suppression	98-36980, 99-36980	25
Miniature, Neon E.M.I. Suppressed	38-36180, 38-36280	25
Miniature, E.M.I. Suppressed	18-36880	26
Miniature, E.M.I. Suppressed Watertight	18-36680	26

Description	Series	Page Number
Press-to-Test		
Miniature, Optional Press-to-Test	59-52280, 59-52380	27
Miniature, Press-to-Test	01-91180	27
Standard Size, Press-to-Test	02-91180	28
Miniature, Watertight Press-to-Test	05-90880	28
	05-91182	29
Watertight, Press-to-Test	06-91182	29
Standard Size	04-VM905	30
Miniature, Press-to-Test	03-90980	30
Miniature, Press-to-Test	03-93480, 03-93481	31
Miniature, Press-to-Test	03-90981	32
Miniature, E.M.I. Suppressed, Watertight, Press-to-Test	08-83283	33
Miniature, E.M.I. Suppressed	08-83281	33

Push-in		
Sub-miniature "Little QT"	99-33080, 99-33081	34
Little QT Lamps		34

Presslite Switches

INDICATOR LIGHTS

ELECTROSWITCH
•ELECTRONIC PRODUCTS
UNIT OF ELECTRO SWITCH CORP.

Presslites Friction Cap

A versatile and expanding line of modular Presslite switches and matching indicator assemblies is the end product of years of continuing design improvements. The Friction Cap Presslite Series provides the broadest possible flexibility in terms of electrical characteristics, appearance and mounting procedure, allowing the user to "engineer" a switch assembly to meet specific requirements.

Many pushbutton sizes and configurations are offered, with sufficient space for engraved legends or symbols. A wide range of mounting hardware is available to meet virtually every panel appearance or mounting requirement

Presslites Friction Cap Bases

A wide range of electrical ratings and contact configurations are available in both alternate (push-on/push-off) and momentary operation. All assemblies accept size T-1 3/4 lamps. Unless otherwise specified in the following pages, materials for Friction Cap bases are as follows:

Contacts
Coin Silver (Gold plated contacts are available on some types.)

Solder Terminals
Coin Silver or Plated Brass

Terminal Insulation
Molded Thermoset Plastic

Housing
Anodized Aluminum (except 10.1 amp bases, which have thermoplastic housing and nickel plated brass mounting bushing.)

Switch Life Expectancies

Rating	Type	Expected Life at Rated Load
.5 Amp	591	1 to 3 million cycles
3 Amps	543, 546, 643	1 to 2 million cycles
5 Amps	416,418 516,518, 520, 521, 616, 618	500,000 to 1 million cycles
10.1 Amps	5710, 5720, 5810, 5820, 6710, 6720, 6810, 6820	100,000 cycles
15 Amps	517, 519	50,000 to 100,000 cycles

The complete part number for a Friction Cap Presslite assembly consists of four blocks of digits, such as the following:

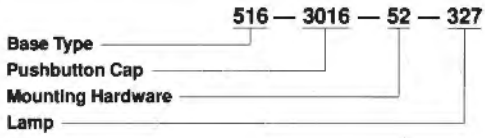

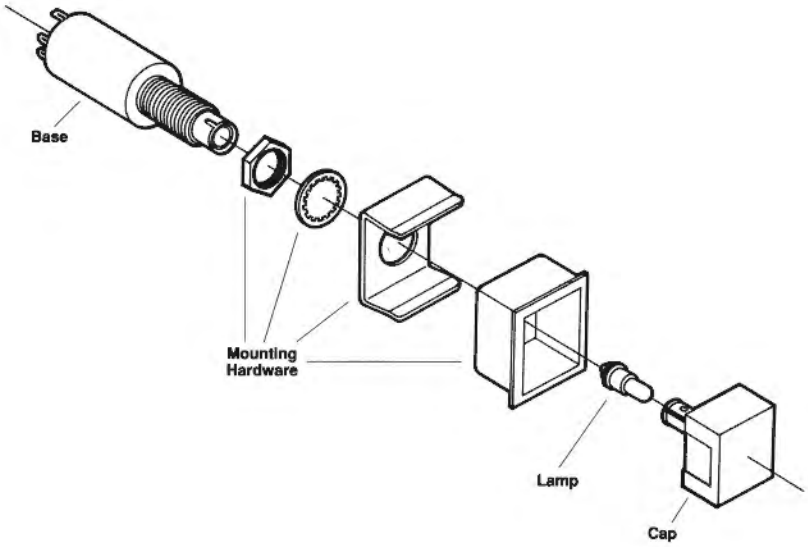

Electroswitch Electronic Products • 2010 Yonkers Road • Raleigh, North Carolina
T 888-768-2797 • F 800-909-9171 • www.electro-nc.com

Presslites
Friction Cap Bases

INDICATOR LIGHTS

ELECTROSWITCH
•ELECTRONIC PRODUCTS
UNIT OF ELECTRO SWITCH CORP.

Type 516 ALTERNATE ACTION

Switch Characteristics
Contact rating: 5 amps resistive at 115 VDC or 28 VDC.
Nominal pushbutton travel: .219 in
Nominal operating force: 24 oz.
Material and Finishes
Pushbutton: high impact resistant plastic per L-P-349.
Pushbutton retention and knurled nut: aluminum, bright anodized.
Keywasher and mounting nut: brass, nickel plated.
Housing: aluminum, anodized.
Terminals and Contacts: coin silver
Terminal Board: molded thermoset plastic
Lamp
T-1¾ incandescent or T-2 neon with midget flange base. See Lamp Selection Guide. Lamp may be replaced from front of panel by removing pushbutton retention nut. Switches will not operate with lamp removed.
Weight
Approximately .5 oz.
Styles
Where maximum indication of pushbutton illumination is of primary importance, the reflector style retention nut is recommended.

5 Amp Switch Base

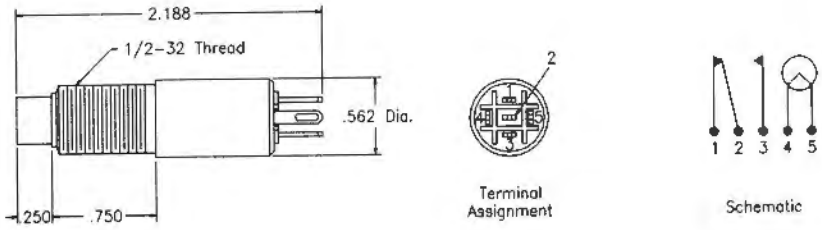

Single pole, double throw (Form C) snap action contacts.
Contact rating: 5 amps resistive at 115 VAC or 28 VDC.

Type 518 MOMENTARY ACTION

Switch Characteristics
Contact rating: 5 amps resistive at 115 VDC or 28 VDC.
Nominal pushbutton travel: .219 in
Nominal operating force: 24 oz.
Material and Finishes
Pushbutton: high impact resistant plastic per L-P-349.
Pushbutton retention and knurled nut: aluminum, bright anodized.
Keywasher and mounting nut: brass, nickel plated.
Housing: aluminum, anodized.
Terminals and Contacts: coin silver
Terminal Board: molded thermoset plastic
Lamp
T-1¾ incandescent or T-2 neon with midget flange base. See Lamp Selection Guide. Lamp may be replaced from front of panel by removing pushbutton retention nut. Switches will not operate with lamp removed.
Weight
Approximately .5 oz.

- Nominal operating force: 32 oz.
- Nominal pushbutton travel: .094 in.

3 Amp Switch Base

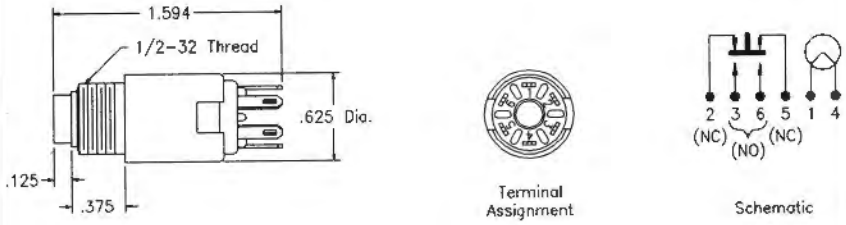

Single pole, 2 circuit double break (Form Z). Contact rating: 3 amps resistive at 115 VAC or 30 VDC.
Nominal pushbutton travel: .0125 in. including .031 in. pretravel and .031 in. overtravel.
Mounting hardware: intended for use with styles 7 and 8 (snap-in mounting adaptors).

Type 543 MOMENTARY ACTION

- Nominal operating force: 14 oz. to close normally open contacts.

Type 546 MOMENTARY ACTION

- Contacts: Gold plated for low level switching.
- Nominal operating force: 7 oz. to close normally open contacts.

Type 545 MOMENTARY ACTION

Momentary Action SPDT 3A @ 30VDC or 115VAC
- Contacts: Gold plated for low level switching
- Nominal operating force: 7 oz. to close normally open contacts
- Nominal pushbutton travel: 1/8" including 1/32" pre travel and 1/32" over travel

3 Amp Switch Base

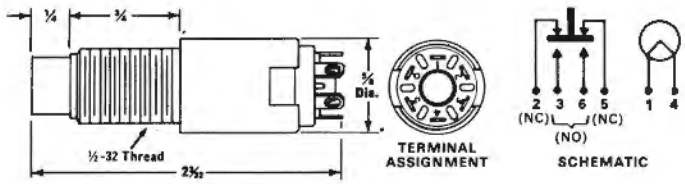

Single pole, 2 circuit double break (Form Z). Contact rating: 3 amps resistive at 115 VAC or 30 VDC.
Nominal pushbutton travel: .0125 in. including .031 in. pretravel and .031 in. overtravel.

Presslites
Friction Cap Bases

INDICATOR LIGHTS

ELECTROSWITCH
•ELECTRONIC PRODUCTS
UNIT OF ELECTRO SWITCH CORP.

Type 532

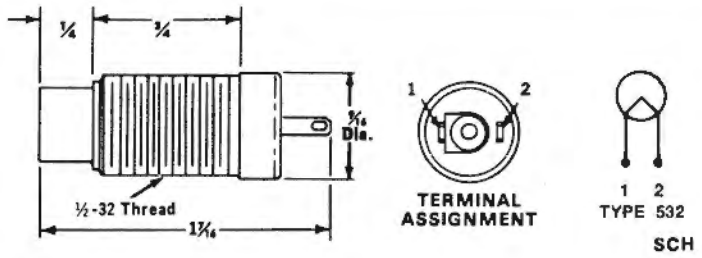

• Provides same pushbutton projection as Presslite switch bases in all styles of mounting hardware.

Material and Finishes
Pushbutton: high impact resistant plastic per L-P-349.
Pushbutton retention and knurled nut: aluminum, bright anodized.
Keywasher and mounting nut: brass, nickel plated.
Housing: aluminum, anodized.
Terminals and Contacts: coin silver
Terminal Board: molded thermoset plastic

Lamp
T-1¾ incandescent or T-2 neon with midget flange base. See Lamp Selection Guide. Lamp may be replaced from front of panel by removing pushbutton retention nut. Switches will not operate with lamp removed.

Weight
Approximately .5 oz.

Type 520

- Nominal operating force: 32 oz.
- Nominal pushbutton travel: .219 in.

Type 521

- Nominal operating force: 40 oz.
- Nominal pushbutton travel: .094 in.

Type 5710 ALTERNATE LATCHING ACTION

- Nominal operating force: 12 oz.
- Nominal pushbutton travel: .219 in.
- Latching action: Pushing plunger closes N.O. contacts and latches plunger. Pushing plunger again releases contacts and plunger returns to "out" position. Plunger latch point is .156 in. from "out" position. Swing and latch interlocked to prevent teasing.

Type 5810 MOMENTARY ACTION

- Nominal operating force: 10 oz.
- Nominal pushbutton travel: .094 in.

5 Amp Switch Base

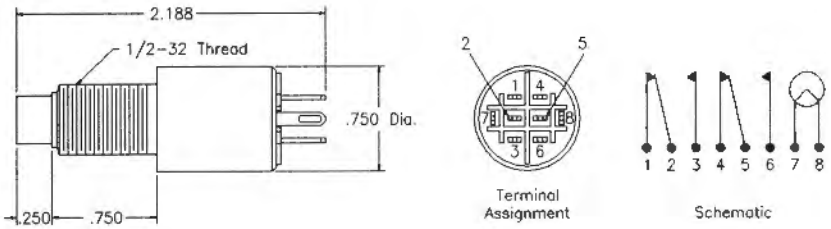

Double pole, double throw (Form C) snap action contacts.
Contact rating: 5 amps resistive at 115 VAC or 28 VDC.

10.1 Amp Switch Base

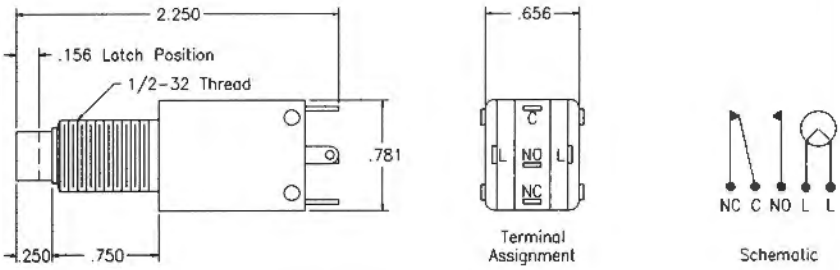

Single pole, double throw (Form C) snap action contacts.
Contact rating: 10.1 amps resistive at 125/250 VAC or 14 VDC.
Contact module is UL Listed (not tested for multiple circuits) and CSA Certified.

Electroswitch Electronic Products • 2010 Yonkers Road • Raleigh, North Carolina
T 888-768-2797 • F 800-909-9171 • www.electro-nc.com

Presslites
Friction Cap Bases

INDICATOR LIGHTS

ELECTROSWITCH
•ELECTRONIC PRODUCTS
UNIT OF ELECTRO SWITCH CORP.

Type 5720 ALTERNATE LATCHINGACTION

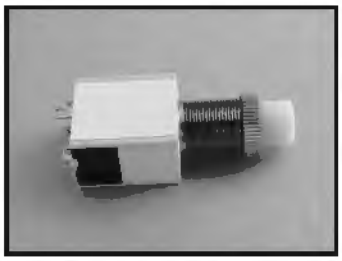

Switch Characteristics

- Double pole, double throw contact rating 10.5 amp resistive @ 125/250 VAC or 28 VDC - 5 amp resistive @ 30 VDC
- Nominal operating force: 20 oz.
- Nominal pushbutton travel: .219 in.
- Latching action: Pushing plunger closes N.O. contacts and latches plunger. Pushing plunger again releases contacts and plunger return to "out" position. Plunger latch point is .156 in. from "out" position. Switch and latch interlocked to prevent teasing.

10.1 Amp Switch Base

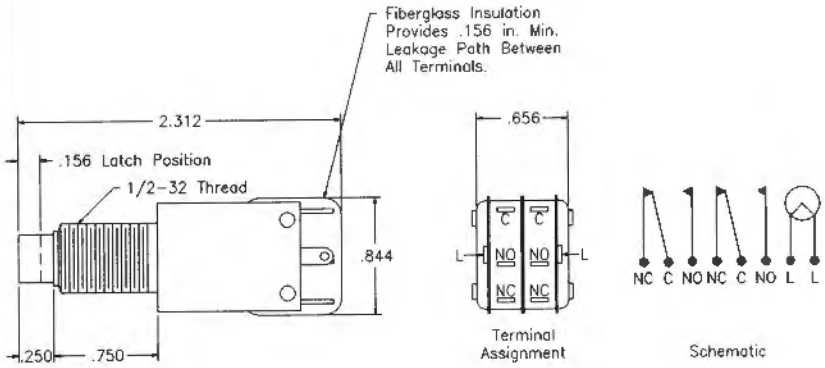

Double pole, double throw (Form C) snap action contacts.
Contact rating: 10.5 amps resistive at 125/250 VAC or 28 VDC, 5 amps resistive at 30 VDC.
Contact module is UL Listed (not tested for multiple circuits) and CSA Certified.

Type 5820

- Nominal operating force: 16 oz.
- Nominal pushbutton travel: .094 in.

Type 517 ALTERNATE ACTION

- Nominal operating force: 32 oz.
- Nominal pushbutton travel: .219 in.

Type 519 MOMENTARY ACTION

- Nominal operating force: 40 oz.
- Nominal pushbutton travel: .219 in.

15 Amp Switch Base

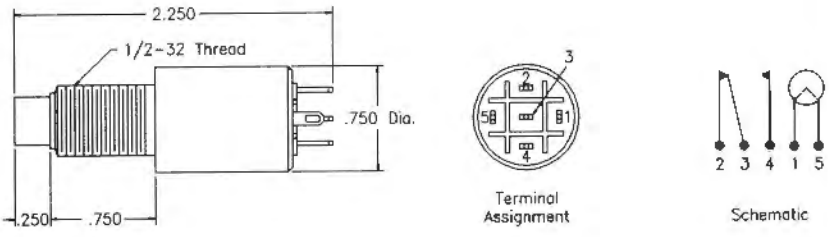

Single pole, double throw (Form C) snap action contacts.
Contact rating: 15 amps resistive at 115 VAC or 28 VDC.

Presslites
Pushbutton Cap

INDICATOR LIGHTS

ELECTROSWITCH
•ELECTRONIC PRODUCTS
UNIT OF ELECTRO SWITCH CORP.

Presslites Friction Pushbutton Caps
The Friction Cap Presslite switch line offers a variety of pushbuttons that vary by style, shape, size, and color. The buttons are made from high impact-resistant plastic per L-P-349. The pushbutton code is based on the cap's characteristics, and is used in the complete assembly part number. All Presslite switches use size T-1 3/4 incandescent midget flange base lamps. Available lamps are listed in the Lamp Selection Guide.

Presslite caps allow for engraving or printing of legends on the button's surface, in order to identify function or for added convenience. Most Electroswitch distributors provide custom engraving of Presslites and Indicators, and the factory maintains a well equipped engraving and hot stamping department.

Standards
Some pushbutton caps have been designated as standards. They are 5/8 in. round, 5/8 in. square, and 3/4 in. x 1 in. rectangular. These products generally offer shorter lead times.

Style
Three basic cap styles, are available:
#1 features wrap-around construction, providing front and side surfaces of one continuous piece of translucent material. This is the most frequently used style and provides the greatest legend area.

#2 features a flat colored lens on the top and black opaque sides. The legend area is reduced due to the .031 in. frame, but the cap is useful in applications where no light transmission through the sides of the button is allowed.

#4 has an off-white colored wrap-around cap with an internal colored filter. When lit, the button takes on the filter color. This cap provides maximum legibility in the "on" position, and is easily read in the presence of ambient light.

Shape and Size
Three shapes are available: round, square, and rectangular. Round and square caps come in 1/2 in., 5/8 in., and 3/4 in. sizes, the rectangular cap is available in 3/4 in. x 1 in. sizes.

Color
Six standard colors are available: white, off-white, red, green, blue, and orange. Internal color filters are not available in colors white and off-white. For custom colors contact the factory.

Keying
Keyed (non-rotatable) circular caps are available. Mounting hardware for square and rectangular caps provides inherent keying, and non-keyed caps will be provided.

3 0 1 6

- **Shape and Size** — 3
- **Keying** — 0
- **Style** — 1
- **Color** — 6

Shape and Size
- 1 1/2 in. Round
- 2 1/2 in. Square
- 3 5/8 in. Square
- 4 3/4 in. Square
- 5 3/4 in. Round
- 6 5/8 in. Round
- 12 3/4 in. x 1 in. Rectangular

Keying
- 0 Not Keyed
- 1 Keyed

Style
- 1 Solid Color
- 2 Black Sides
- 4 Internal Filter

Color
- 5 White
- 6 Red
- 7 Green
- 11 Blue
- 16 Orange
- 17 Off-white

FRICTION CAP PUSHBUTTON AVAILABILITY

Shape and Size		Pushbutton Styles		
		1	2	4
Round	1/2 in.	X	X	–
	5/8 in.	X	X	X
	3/4 in.	X	X	X
Square	1/2 in.	X	X	X
	5/8 in.	X	X	X
	3/4 in.	X	--	X
Rectangular	3/4 in. x 1 in.	X	X*	X

Shaded "X" indicates standard size and style. *Pushbuttons made from polycarbonate per L-P-393.

Presslites
Friction Cap Hardware

INDICATOR LIGHTS

ELECTROSWITCH
•ELECTRONIC PRODUCTS
UNIT OF ELECTRO SWITCH CORP.

Hardware Availability
The versatility of Friction Cap Switches extends to the broad selection of mounting hardware styles and finishes. This includes recessed and barrier mounting, as well as low cost snap-in mounts. Hardware availability is summarized in the table at right. Three hardware standards have been designated as shown.

HARDWARE AVAILABILITY

Shape and Size		Hardware Styles		
		5	7	8
Round	1/2 in.	X	–	–
	5/8 in.		–	–
	3/4 in.	X	–	–
Square	1/2 in.	X	–	–
	5/8 in.			X
	3/4 in.	X	X	X

Shaded "X" indicates standard hardware size and style.

Part Number Identification
The third block of digits in the complete part number identifies the mounting hardware as shown at right. Consult applications engineering for information concerning specialized finishes.

516 — 3016 — 5 2 — 327

Style
5 Recess Adaptor
7 Flush Snap-in Mount
8 Barrier Snap-in Mount

Finish
2 Black

Base Projection
The projection of the base behind the front of the mounting panel depends on the base type and style of mounting hardware as shown at right. To determine projection behind the back of the panel, subtract the panel thickness from the given dimension.

BASE PROJECTION BEHIND FRONT OF MOUNTING PANEL

Overall Base Length	Hardware Style		
	5	7	8
1.0625 in.	N/A	1.3125 in.	1.3125 in.
1.5938 in.	N/A	1.8125 in.	1.8125 in.
2.1875 in.	2.3125 in.	2.4375 in.	2.4375 in.
2.2500 in.	2.3750 in.	2.5000 in.	2.5000 in.
2.3125 in.	2.4375 in.	2.5625 in.	2.5625 in.

Style 5

Material and Finishes
Recess adaptor: aluminum, black anodized
Mounting bracket: stainless steel
Lockwasher: stainless steel
Mounting nut: brass, nickel plated

Mounting Hardware Configuration

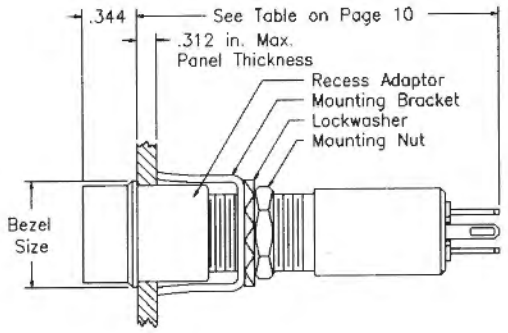

Mounting Dimensions

Pushbutton Size	Bezel Size	Panel Cutout Dimensions	
		Single Unit +.015 -.000	Stacked Units
1/2 in. Round	.65 in. Dia.	.562 in. Dia.	-
5/8 in. Round	.80 in. Dia.	.718 in. Dia.	-
3/4 in. Round	.93 in. Dia.	.843 in. Dia.	-
1/2 in. Square	.67 in. Sq.	.571 in. Sq.	Add .671 in. x N*
5/8 in. Square	.81 in. Sq.	.718 in. Sq.	Add .817 in. x N*
3/4 in. Square	.94 in. Sq.	.843 in. Sq.	Add .942 in. x N*

*N = Number of additional units. Example: Cutout length for three 1/2 in. square recess adaptors is .671 in. x 2 + .571 in. = 1.913 in. +.015 -.000

Presslites
Friction Cap Hardware

INDICATOR LIGHTS

ELECTROSWITCH
•ELECTRONIC PRODUCTS
UNIT OF ELECTRO SWITCH CORP.

Style 7

Material and Finishes
Housing: black thermoplastic
Mounting clip: stainless steel
Spacer: aluminum

Mounting Hardware Configuration

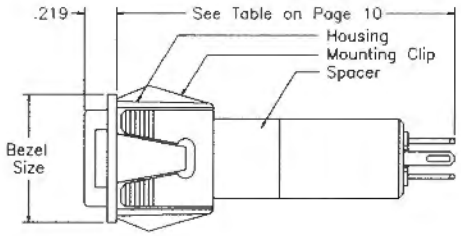

Mounting Dimensions

Pushbutton Size	Bezel Size	Single Unit Cutout ± .005	Stacked Units*
5/8 in. Square §	.81 in. Square	.745 in. for panels .050 in. to .120 thick .755 in. for panels .120 in. to .187 thick	Add .815 in. x N
3/4 in. Square	.94 in. Square	.870 in. for panels .050 in. to .120 thick .880 in. for panels .120 in. to .187 thick	Add .940 in. x N
3/4 in. x 1 in Rectangle	.94 in. x 1.18 in. Rectangle	.870 in. x 1.110 in.	Add .942 in. x N Vertical Add 1.182 in. x N Horizontal

*N = Number of additional units.
Example: Cutout length for three 5/8 in. square mounts is .815 in. x 2 + .745 in. = 2.375 in. ± .005.

§ Not recommended for use with 10.1 amp Presslite bases since they will not pass through panel cutout.

Style 8

Material and Finishes
Housing: black thermoplastic
Mounting clip: stainless steel
Spacer: aluminum

Mounting Hardware Configuration

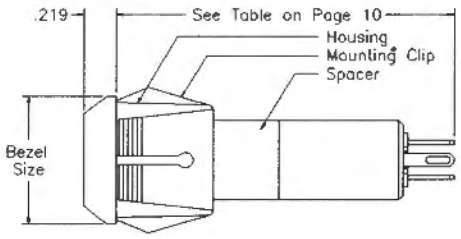

Mounting Dimensions

Pushbutton Size	Bezel Size	Single Unit Cutout ± .005	Stacked Units*
5/8 in Square §	.81 in. Square	.745 in. for panels .050 in. to .120 thick .755 in. for panels .120 in. to .187 thick	Add .815 in. x N
3/4 in. Square	.94 in. Square	.870 in. for panels .050 in. to .120 thick .880 in. for panels .120 in. to .187 thick	Add .940 in. x N

*N = Number of additional units.
Example: Cutout length for three 5/8 in. square mounts is .815 in. x 2 + .745 in. = 2.375 in. ± .005.

§ Not recommended for use with 10.1 amp Presslite bases since they will not pass through panel cutout

Electroswitch Electronic Products • 2010 Yonkers Road • Raleigh, North Carolina
T 888-768-2797 • F 800-909-9171 • www.electro-nc.com

Presslites
Friction Cap
Specialty Hardware

INDICATOR LIGHTS

ELECTROSWITCH
•ELECTRONIC PRODUCTS
UNIT OF ELECTRO SWITCH CORP.

Splashproof and Oiltight

Switch or Indicator Bases
All Presslite base types shown on pages 5 through 8 except Types 543 and 546 may be used with this mounting accessory.

Material and Finishes
Pushbutton: high impact resistant plastic per L-P 349.
Rubber boot: gray silicone rubber supplied with bright anodized adaptor. Black neoprene rubber supplied with black anodized adaptor. (Neoprene seals recommended for oiltight applications.)
Mounting adaptor: aluminum, bright or black anodized.
Hex nut: brass, nickel plated.
Lockwasher: stainless steel.

Lamp
T-1 ¾ bulb with midget flange base. See Lamp Selection Guide. Lamp may be replaced from front of panel by removing pushbutton.

Mechanical Drawing

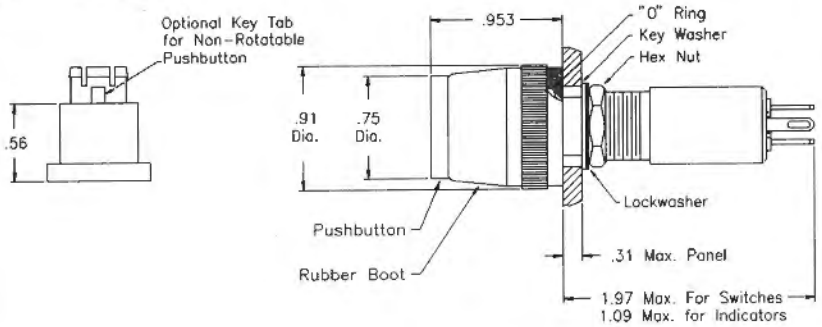

Panel Cutouts

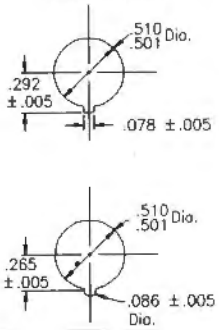

Complete Assembly Part Numbers (Less Lamp) With Rotatable Pushbutton and Type 516 Switch

Translucent Pushbutton Colors	Mounting Adaptor Finish	
	Bright Anodized	Black Anodized
White	516-9015-91	516-9015-92
Red	516-9016-91	516-9016-92
Green	516-9017-91	516-9017-92
Blue	516-90111-91	516-90111-92
Orange	516-90116-91	516-90116-92
Off-white	516-90117-91	516-90117-92

To order complete assembly with other base type, change Base Number 516 to desired type. Example: 521-9015-91.
To order non-rotatable pushbutton change second digit of Pushbutton Number from 0 to 1. Example: 516-9115-91.
To order complete assembly with lamp installed, add Lamp Number as 3 digit suffix to Part Number. Example: 516-9015-91-327.

Splashproof and E.M.I. Suppressed

Switch or Indicator Bases
All Presslite base types shown on pages 5 through 8 except Types 543 and 546 may be used with this mounting accessory.

Material and Finishes
Pushbutton: high impact resistant plastic per L-P 349.
Rubber boot: gray silicone rubber
Hex nut and spacers: brass, nickel plated.
Lockwashers: stainless steel.

Lamp
T-1 ¾ bulb with midget flange base. See Lamp Selection Guide. Lamp may be replaced from front of panel by removing pushbutton.

Mechanical Drawing

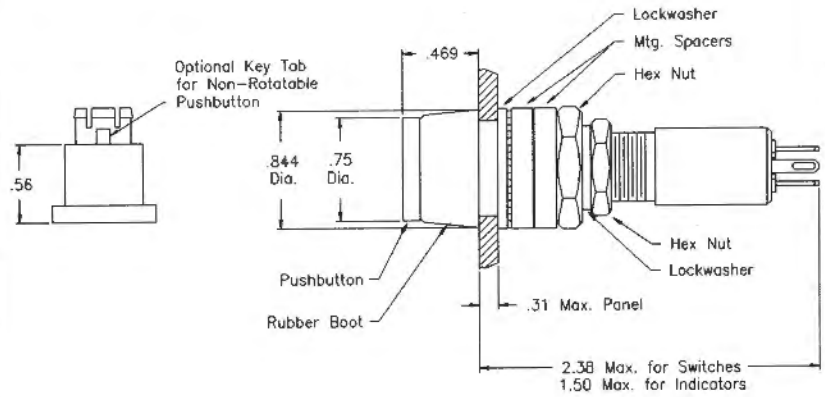

Panel Cutouts

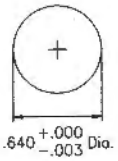

Complete Assembly Part Numbers (Less Lamp) With Type 516 Switch

Translucent Pushbutton Colors	Rotatable Pushbutton	Non-Rotatable Pushbutton
White	516-53660-10-5	516-53660-11-5
Red	516-53660-10-6	516-53660-11-6
Green	516-53660-10-7	516-53660-11-7
Blue	516-53660-10-11	516-53660-11-11
Orange	516-53660-10-16	516-53660-11-16
Off-white	516-53660-10-17	516-53660-11-17

To order complete assembly with other base type, change Base Number 516 to desired type. Example: 521-53660-10-5.
To order complete assembly with lamp installed, add Lamp Number as 3 digit suffix to Part Number. Example: 516-53660-10-5-327.

Presslites
Watertight Switch

INDICATOR LIGHTS

ELECTROSWITCH
•ELECTRONIC PRODUCTS
UNIT OF ELECTRO SWITCH CORP.

Watertight, 3 Amp Momentary Action

This switch features a gray silicone rubber boot and rubber washer which provide a true watertight seal from the front of the mounting panel. The pushbutton screws into the switch base and may be removed from the front of the panel for relamping.
When switching a 3 amp resistive load, life expectancy exceeds 1 million cycles.
The linear action switch mechanism is provided with a special overtravel device which prevents damage to the contacts from excessive pushbutton pressure and assures positive engagement of the contacts at an optimum force. To assure immunity to mildly corrosive environments, all terminals, contacts, and springs are heavy gold flashed.

Switch Characteristics
Contact rating: 3 amps resistive at 115 VAC or 30 VDC.
Nominal pushbutton travel: .125 in. including .031 in. pretravel and .031 in. overtravel.
Nominal operating force: 48 oz.
Material and Finishes
Pushbutton: high impact resistant plastic per L-P-349.
Lens holder: aluminum, black anodized.
Rubber boot and "O" ring: silicone rubber
Mounting tube and spacers: aluminum, anodized per MIL-A-8625.
Keywasher: brass, nickel plated.
Lockwasher: stainless steel.
Terminal board: molded thermoset plastic.
Terminals and contacts: coin silver, gold plated.
Lamp
T-1 ¾, bulb with midget flange base. See Lamp Selection Guide. Choose from Group A.

Type 643

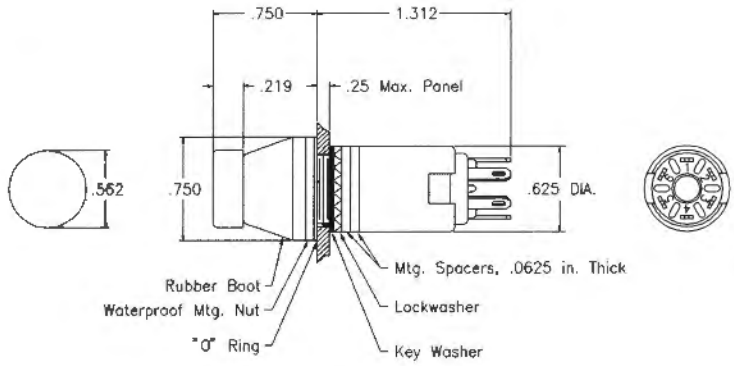

Schematics

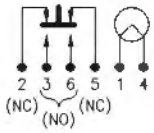

Panel Cutouts

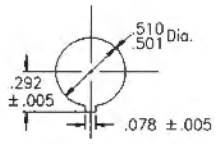

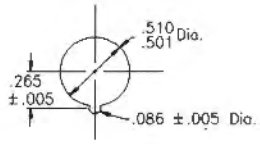

Key washer and slot may be omitted in some installations.

Complete Assembly Part Numbers (Less Lamp)

Transparent Pushbutton Colors	Part Number
Clear*	643-35-7
Red	643-36-7
Green	643-37-7
Amber	643-38-7
Blue	643-311-7
Orange	643-316-7
Off-white	643-317-7

Translucent colors: Add "TL" to first Dash Number of Part Number. *White if translucent color specified. To order complete assembly with lamp installed, add Lamp Number as 3 digit suffix to Part Number. Example: 643-36-7-327.

Electroswitch Electronic Products • 2010 Yonkers Road • Raleigh, North Carolina
T 888-768-2797 • F 800-909-9171 • www.electro-nc.com

Presslites
Low Profile Switches

INDICATOR LIGHTS

ELECTROSWITCH
•ELECTRONIC PRODUCTS
UNIT OF ELECTRO SWITCH CORP.

5 Amp Snap Action

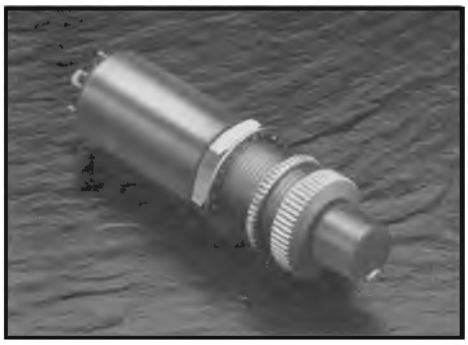

Switch Characteristics
Contact rating:
5 amps resistive at 115 VDC or 28 VDC.
Nominal pushbutton travel: .219 in.
Nominal operating force: 24 oz.

Material and Finishes
Pushbutton: high impact resistant plastic per L-P-349.
Pushbutton retention and knurled nut: aluminum, bright anodized.
Keywasher and mounting nut: brass, nickel plated.
Housing: aluminum, anodized.
Terminals and Contacts: coin silver
Terminal Board: molded thermoset plastic

Lamp
T-1¾ incandescent or T-2 neon with midget flange base. See Lamp Selection Guide. Lamp may be replaced from front of panel by removing pushbutton retention nut. Switches will not operate with lamp removed.

Weight
Approximately .5 oz.

Styles
Where maximum indication of pushbutton illumination is of primary importance, the reflector style retention nut is recommended.

Alternate Action Type 416, Type 616
Momentary Action Type 418, Type 618

Style 1
Beveled Retention Nut

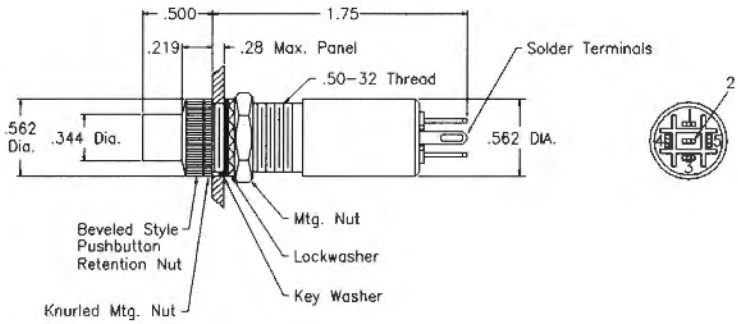

Style 2
Reflector Retention Nut

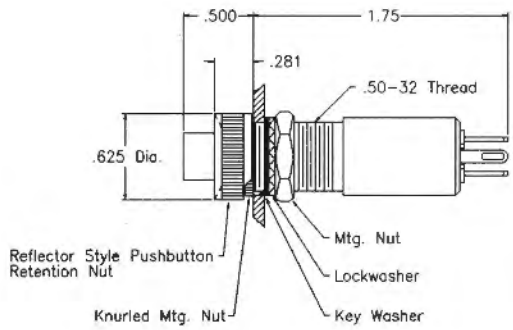

Panel Cutouts

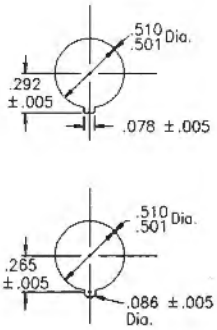

Key washer and slot may be omitted for mounting in round hole.

Schematics

Types 616 & 618 - Types 416 & 418

Complete Assembly Part Numbers For Style 1 Pushbutton Rentention Nut

Translucent Pushbutton Colors	Incandescent (Less Lamp)		115 VAC Neon (Includes A1H Lamp)	
	Alternate Action	Momentary Action	Alternate Action	Momentary Action
White	616-5-1	618-5-1	416-5-1-A1H	418-5-1-A1H
Red	616-6-1	618-6-1	416-6-1-A1H	418-6-1-A1H
Green	616-7-1	618-7-1	-	-
Amber	616-8-1	618-8-1	416-8-1-A1H	418-8-1-A1H
Blue	616-11-1	618-11-1	-	-
Orange	616-16-1	618-16-1	-	-
Off-white	616-17-1	618-17-1	416-17-1-A1H	418-17-1-A1H

To order switch with reflector style pushbutton retention nut (style 2), change hardware designation number from 1 to 2. Example: 616-5-2. To order switch with incandescent lamp installed, add Lamp Number as 3 digit suffix to part number. Example: 616-5-1-327.

Presslites
Low Profile Switches

INDICATOR LIGHTS

ELECTROSWITCH
•ELECTRONIC PRODUCTS
UNIT OF ELECTRO SWITCH CORP.

10.1 Amp Snap Action

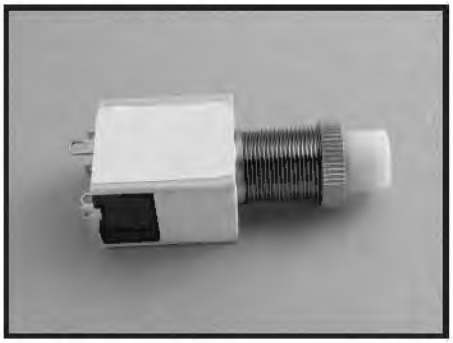

Switch Characteristics
Contact rating:
10.1 amps resistive at 125/250 VAC or 14 VDC
5 amps resistive at 30 VDC.
Nominal pushbutton travel:
Alternate action switches, .219 in.
Nominal operating force:
Single pole switches, 12 oz.
Double pole switches, 20 oz.

Material and Finishes
Pushbutton: high impact resistant plastic per L-P-349.
Knurled nut: aluminum, bright anodized.
Keywasher and mounting nut: brass, nickel plated.
Lockwasher: stainless steel.
Housing molded thermoplastic.
Contacts: coin silver

Lamp
T-1¾ incandescent with midget flange base or Al H neon. See Lamp Selection Guide. Lamp may be replaced from front of panel by removing pushbutton.

Weight
Approximately .6 oz.

Solder Terminals
Terminals accept AMP FASTON No. 60729-1 receptacles or equivalent.

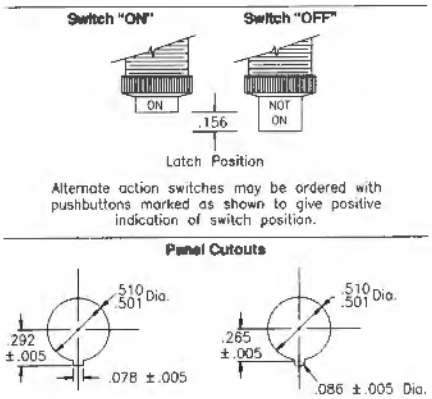

Alternate Action: Types 6710, 6720
Momentary Action: Types 6810, 6820

Type 6710, Type 6810

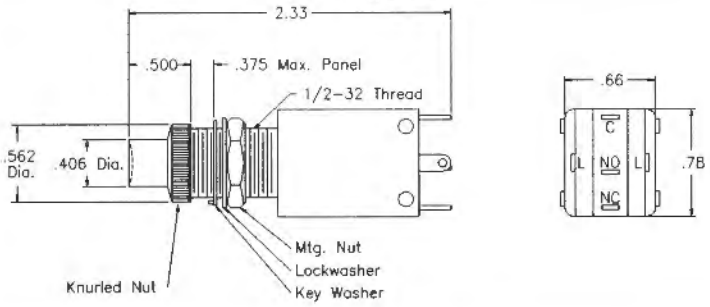

Schematics

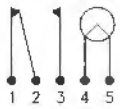

SINGLE POLE, DOUBLE THROW
Type 6710 Alternate Action
Type 6810 Momentary Action

Type 6720, Type 6820

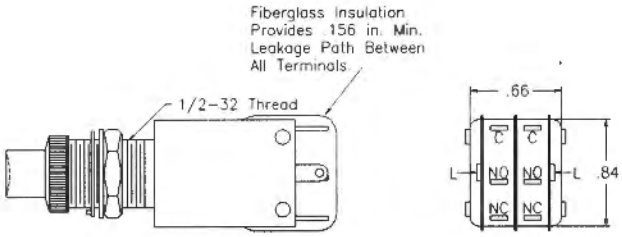

Schematics

DOUBLE POLE, DOUBLE THROW
Type 6720 Alternate Action
Type 6820 Momentary Action

Complete Assembly Part Numbers (Less Lamp) For Switches With Unmarked Pushbutton

Translucent Pushbutton Colors	Single Pole Double Throw, 2 Circuit		Double Pole Double Throw, 2 Circuit	
	Alternate	Momentary	Alternate	Momentary
White	6710-5	6810-5	6720-5	6820-5
Red	6710-6	6810-6	6720-6	6820-6
Green	6710-7	6810-7	6720-7	6820-7
Amber	6710-8	6810-8	6720-8	6820-8
Blue	6710-11	6810-11	6720-11	6820-11
Orange	6710-16	6810-16	6720-16	6820-16
Off-white	6710-17	6810-17	6720-17	6820-17

To order switch with "Not On" marking on pushbutton, add 5 to Part Number suffix. Examples: 6710-55, 6710-56.
To order switch with lamp installed, add Lamp Number as 3 digit suffix to part number. Example: 6710-5-327.

Electroswitch Electronic Products • 2010 Yonkers Road • Raleigh, North Carolina
T 888-768-2797 • F 800-909-9171 • www.electro-nc.com

Presslites
Snap-In Switches

INDICATOR LIGHTS

ELECTROSWITCH
•ELECTRONIC PRODUCTS
UNIT OF ELECTRO SWITCH CORP.

.5 Amp Momentary Action Switch and Matching Indicator

Switch Characteristics
Contact rating: .5 amp resistive at 30 VDC. .1 amp resistive at 115 VAC.
Nominal pushbutton travel: .1 in.
Nominal operating force: 4 oz.

Material and Finishes
Pushbuttons: high impact plastic per L-P-349.
Housing: black thermoplastic.
Mounting clip: stainless steel.
Lamp terminals: beryllium copper, tin plated.
Switch terminals and contacts: brass, gold plated.

Lamp
T-1 3/4 incandescent, with midget flange base. See Lamp Selection Guide. Lamp remains stationary when pushbutton is depressed.

Mounting
Assemblies press fit into .687 in. ±005 in. dia. holes from front of panel. Mounting clips accommodate panels from .063 in. to .188 in.

Weight
Approximately .25 oz.

Solder Terminals
Terminals accept AMP FASTON No.60415-1 receptacles or equivalent.

Type 591 Switch

Printed Circuit Terminals Type 591

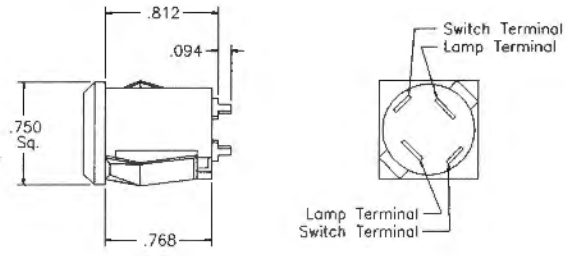

Schematics

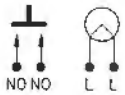

5/8 In. Square Low Profile Pushbutton

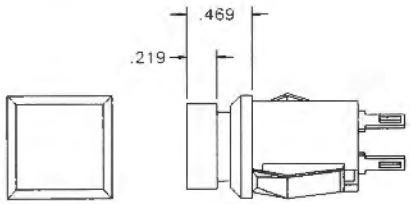

3/4 In. Square Pushbutton

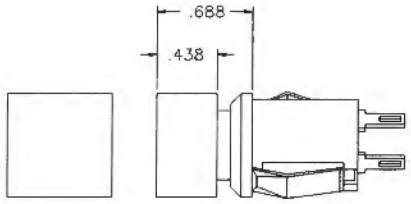

Optolite Indicators

INDICATOR LIGHTS

ELECTROSWITCH
•ELECTRONIC PRODUCTS
UNIT OF ELECTRO SWITCH CORP.

This section of the catalog has been compiled to provide the necessary specification information as concisely as possible. In particular, the Indicator Selection Guide, found on pages two and three, serves as an effective tool. General availability is summarized in the table below.

Complete assembly part numbers are tabulated for each indicator/cap combination. Very simple substitutions in these numbers allow changes in color and substitution of translucent for transparent lenses. The desired lamp number is simply added as a suffix to the part number.

Our panel indicators embody the best materials and performance features. Materials, finishes, and workmanship conform to military, federal, or industry specifications. A cross reference listing of Electroswitch indicators which are on the MIL-L-3661 Qualified Products List and also those which may be ordered against MS (Military Standard) designations is shown on page 35.

Because of the wide variety of items in the Electroswitch Optolite Indicator line, it is possible to select a standard (off-the-shelf) unit to meet a precise requirement. Variations can also be furnished, such as caps in special colors or hot stamping and engraving.

The Electroswitch sales staff is always at your service whenever additional information or assistance is required.

Indicator Availability Summary	Sub-Miniature	Miniature	Miniature, Neon	Standard
General Purpose	F	B	R	–
Watertight	F	B	F	–
E.M.I. Suppressed	F	F	F	–
E.M.I. Suppressed and Watertight	–	F	F	–
Press-to-Test	–	R	–	R
Watertight, Press-to-Test	–	B	–	R
E.M.I. Suppressed and Watertight, Press-to-Test	–	R	–	–

R - Indicator available in style that mounts from rear of panel
F - Indicator available in style that mounts from front of panel
B - Indicator available in both rear and front mounting styles

Electroswitch Electronic Products • 2010 Yonkers Road • Raleigh, North Carolina
T 888-768-2797 • F 800-909-9171 • www.electro-nc.com

Optolite Indicators
General Purpose

INDICATOR LIGHTS

ELECTROSWITCH
•ELECTRONIC PRODUCTS
UNIT OF ELECTRO SWITCH CORP.

Sub-Miniature

Material and Finishes
Mounting tube, black glass filled nylon per MIL-M-19887. Mounting nut aluminum, black anodized per MIL-A-8625A. Lockwasher, stainless steel or steel, nickel plate. Brass terminals, tin plated per MIL-T-10727A.
Cap Assembly
Lens, high impact-resistant plastic per L-P-349.
Lamp
T-1 sub-midget flange base. See Lamp Selection Guide. Choose from Group M.
Mounting
Assembly mounts from front of panel. All mounting hardware supplied.
Weight
Approximately .12 oz. less lamp.

Base Assembly
99-33180

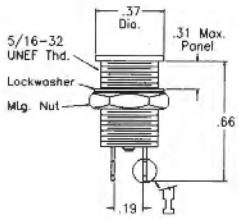

Schematic

Cap Styles

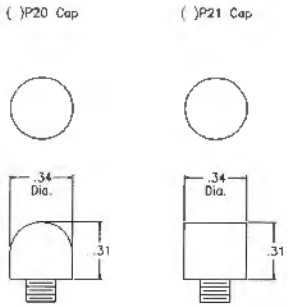

Complete Assembly Part Numbers (Less Lamp)

Transparent Lens Colors	( )P20 Cap	( )P21 Cap
Clear*	99-33180-5P20	99-33180-5P21
Red	99-33180-6P20	99-33180-6P21
Green	99-33180-7P20	99-33180-7P21
Amber	99-33180-8P20	99-33180-8P21
Blue	99-33180-11P20	99-33180-11P21
Yellow	99-33180-12P20	99-33180-12P21
Orange	99-33180-16P20	99-33180-16P21
Off-white	99-33180-17P20	99-33180-17P21

Translucent colors: Add "TL" as suffix to Part Number. *White if translucent color specified. ( ) Designates color selection.

Miniature, Neon

Material and Finishes
Mounting tube and nut, aluminum, black anodized per MIL-A-8625A. Lockwasher, stainless steel or steel, nickel plate. Brass terminals, tin plated per MIL-T-10727A.
Cap Assembly
Lens, high impact-resistant plastic per L-P-349. Standard colors are transparent.
Lamp
C7A (standard) or C9A (high brightness) T2 neon lamp furnished with each assembly. See Lamp Selection Guide for electrical characteristics.
Mounting
Assembly mounts from rear of panel. All mounting hardware supplied.
Weight
Approximately .3 oz. less lamp

Base Assembly
31-36180 (Internal Resistor 68kΩ) LH74/1 §
31-36280 (Internal Resistor 27kΩ) LH74/2 §

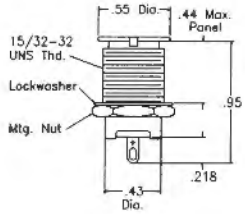

Cap Styles

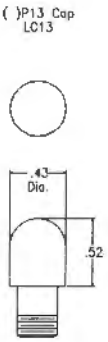

Panel Cutout

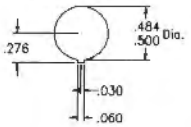

Schematic

Complete Assembly Part Numbers (Includes Lamp)

Lamp	Transparent Lens Colors	( )P13 Cap
C7A	Clear	31-36180-5P13-C7A
	Red	31-36180-6P13-C7A
	Amber	31-36180-8P13-C7A
	Off-white	31-36180-17P13-C7A
C9A	Clear	31-36280-5P13-C9A
	Red	31-36280-6P13-C9A
	Amber	31-36280-8P13-C9A
	Off-white	31-36280-17P13-C9A

Translucent colors: Not recommended. § Assembly conforms to requirements of MS25257 and MIL-L-3661. See page 35 for complete listing of MS Part Numbers and Type Designations. ( ) Designates color selection.

Optolite Indicators
General Purpose

INDICATOR LIGHTS

ELECTROSWITCH
•ELECTRONIC PRODUCTS
UNIT OF ELECTRO SWITCH CORP.

Miniature

11-33480 Type

Material and Finishes
Mounting tube and nuts, aluminum, black anodized per MIL-A-8625A. Lockwasher, stainless steel or steel, nickel plate. Brass terminals, tin plated per MIL-T-10727A.
Cap Assembly
Lens, high impact-resistant plastic per L-P-349.
Lamp
T-1 ¾ midget flange base.
Mounting
Assembly mounts from front of panel. All mounting hardware supplied.
Weight
Approximately .2 oz. less lamp.

Base Assembly
11-33480
LH73/1 §

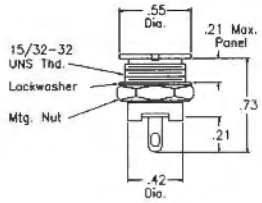

Cap Styles

( )P35 Cap
LC11

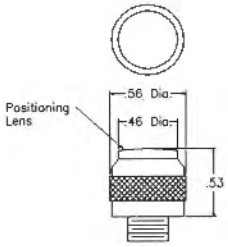

Panel Cutout

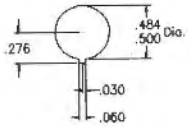

Schematic

Complete Assembly Part Numbers (Less Lamp)

Transparent Lens Colors	( )P35 Cap
Clear*	11-33480- 5P35
Red	11-33480- 6P35
Green	11-33480- 7P35
Amber	11-33480- 8P35
Blue	11-33480-11P35
Yellow	11-33480-12P35
Orange	11-33480-16P35
Off-white	11-33480-17P35

Translucent colors: Add "TL" as suffix to Part Number.
§ Assembly conforms to requirements of MIL-L-3661 and MS25256.
See page 35 for complete listing of MS Part Numbers and Type Designations.
*White if translucent color specified. ( ) Designates color selection.

Miniature

59-52480 Type

Material and Finishes
Mounting tube and nuts, aluminum, black anodized per MIL-A-8625A. Lockwasher, stainless steel or steel, nickel plate. Brass terminals, tin plated per MIL-T-10727A.
Cap Assembly
Lens, high impact-resistant plastic per L-P-349.
Lamp
T-1¾ midget flange base.
Mounting
Assembly mounts from rear of panel. All mounting hardware supplied.
Weight
Approx. .2 oz. less lamp.

Base Assembly
59-52480

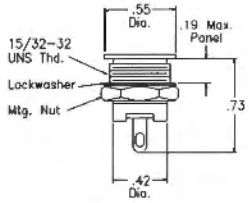

Cap Styles

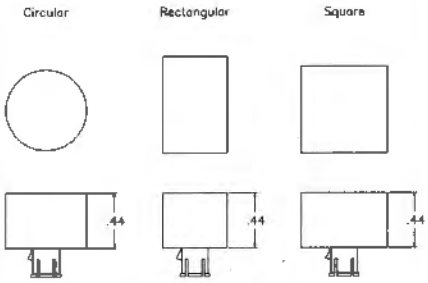

Schematic

Complete Assembly Part Numbers

To order complete assembly specify:

59-52480 – ( ) – ( )

Base Assembly | Cap Assembly (See page 8) | Lamp (See page 35)

Electroswitch Electronic Products • 2010 Yonkers Road • Raleigh, North Carolina
T 888-768-2797 • F 800-909-9171 • www.electro-nc.com

Optolite Indicators
General Purpose

INDICATOR LIGHTS

ELECTROSWITCH
•ELECTRONIC PRODUCTS
UNIT OF ELECTRO SWITCH CORP.

Miniature

14-30080 Type

Material and Finishes
Mounting tube and nuts, aluminum, black anodized per MIL-A-8625A. Lockwasher, stainless steel or steel, nickel plate. Brass terminals, tin plated per MIL-T-10727A.

Cap Assembly
Lens, high impact-resistant plastic per L-P-349. Lens holders, aluminum, black anodized.

Lamp
T-1 ¾ midget flange base.

Mounting
Assembly mounts from rear of panel. All mounting hardware supplied. Recommended mounting hole .500 in. +/- .015 in. dia.

Weight
Approx. .27 oz. less lamp.

Base Assembly
14-30080

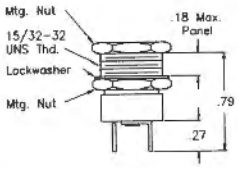

Cap Styles

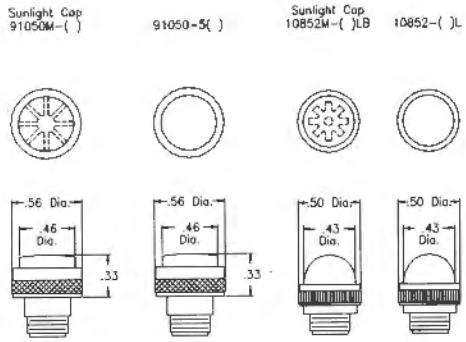

Schematic

Complete Assembly Part Numbers (Less Lamp)

Transparent Lens Colors	91050M-( ) Sunlight Cap	91050M-5( ) Cap	10852M-( )LB Sunlight Cap	10852M-( )L Cap
Clear*	14-30080-55LB	14-30080-55L	14-30080-5LB	14-30080-5L
Red	14-30080-56LB	14-30080-56L	14-30080-6LB	14-30080-6L
Green	14-30080-57LB	14-30080-57L	14-30080-7LB	14-30080-7L
Amber	14-30080-58LB	14-30080-58L	14-30080-8LB	14-30080-8L
Blue	14-30080-511LB	14-30080-511L	14-30080-11LB	14-30080-11L
Yellow	14-30080-512LB	14-30080-512L	14-30080-12LB	14-30080-12L
Off-white	14-30080-517LB	14-30080-517L	14-30080-17LB	14-30080-17L

Translucent colors: Add "TL" as suffix to Part Number, not recommended for sunlight caps. Frosted lens: For 10852M caps only -- add "EF" (externally frosted) or "IF" (internally frosted) as suffix to Part Number.
*White if translucent color specified. ( ) Designates color selection.

Cap Styles

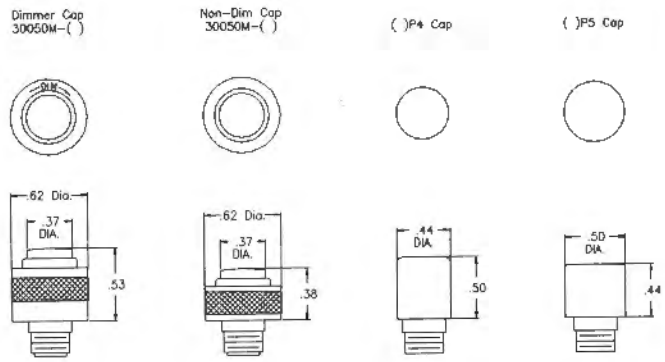

Complete Assembly Part Numbers (Less Lamp)

Transparent Lens Color	30050M-( ) Dimmer Cap	30050M-( ) Non-Dim Cap	( )P4 Cap	( )P5 Cap
Clear*	14-30080-1	14-30080-5	14-30080-5P4	14-30080-5P5
Red	14-30080-2	14-30080-6	14-30080-6P4	14-30080-6P5
Green	14-30080-3	14-30080-7	14-30080-7P4	14-30080-7P5
Amber	14-30080-4	14-30080-8	14-30080-8P4	14-30080-8P5
Blue	14-30080-10	14-30080-11	14-30080-11P4	14-30080-11P5
Yellow	14-30080-14	14-30080-12	14-30080-12P4	14-30080-12P5
Orange	---	14-30080-16	14-30080-16P4	14-30080-16P5
Off-white	---	14-30080-17	14-30080-17P4	14-30080-17P5

Translucent colors: Add "TL" as suffix to Part Number. *White if translucent color specified. ( ) Designates color selection.

Optolite Indicators
General Purpose

INDICATOR LIGHTS

ELECTROSWITCH
•ELECTRONIC PRODUCTS
UNIT OF ELECTRO SWITCH CORP.

General Purpose

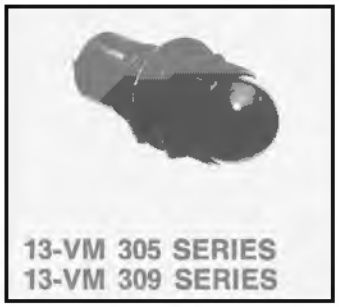

Material and Finishes
Mounting tube and nuts, aluminum, black anodized per MIL-A-8625A. Lockwasher, stainless steel or steel, nickel plate. Brass terminals, tin plated per MIL-T-10727A.
Cap Assembly
Lens, high impact-resistant plastic (nylon). Standard colors are semi-diffusing.
Lamp
T-3 ¾ miniature bayonet base.
Mounting
Assembly mounts from rear of panel. All mounting hardware supplied. Recommended mounting hole .640 in. +/- .015 in. dia.

BASE ASSEMBLY
13-30080S

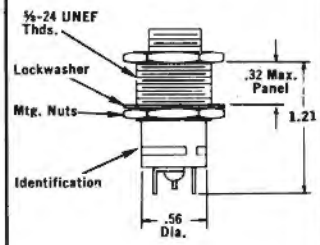

CAP STYLES

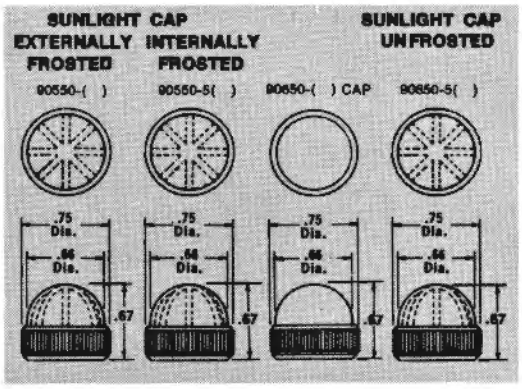

Complete Assembly Part Number (Less Lamp)				
Semi-Diffusing Lens Colors	90550 - ( ) Sunlight Cap	90550 - 5( ) Sunlight Cap	90650 - ( ) Cap	90650 - 5( ) Sunlight Cap
Lunar	13-VM309- 5	13-VM309- 55	13-VM305- 5	13-VM305- 55
Red	13-VM309- 6	13-VM309- 56	13-VM305- 6	13-VM305- 56
Green	13-VM309- 7	13-VM309- 57	13-VM305- 7	13-VM305- 57
Amber	13-VM309- 8	13-VM309- 58	13-VM305- 8	13-VM305- 58
Blue	13-VM309-11	13-VM309-511	13-VM305-11	13-VM305-511

( ) Designates color selection.

SCHEMATIC

Miniature, Neon

Material and Finishes
Mounting tube gold anodized, rear mtg. nut aluminum, black anodized per MIL-A-8625A. Lockwasher, stainless steel or steel, nickel plate. Terminals, brass, tin plated per MIL-T-10727A. Round front mtg. nut, bright nickel plate.
Cap Assembly
Lens, high impact-resistant plastic per L-P-349. Standard colors are transparent.
Lamp
A1G (std.) or A1H (high brightness) T-2 neon is furnished with each assembly.
Mounting
Assembly mounts from rear of panel. All mounting hardware supplied. Recommended mounting hole .500 in. +/- .015 in. dia.
Weight
Approx. .35 oz. less lamp.

BASE ASSEMBLY
33-30880 (27KΩ Internal Resistor)
33-30881 (68KΩ Internal Resistor)

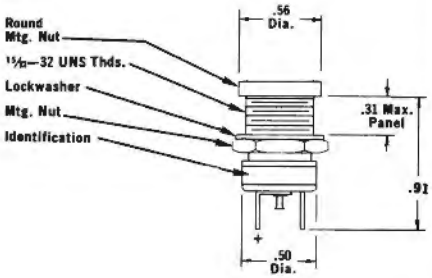

CAP STYLES

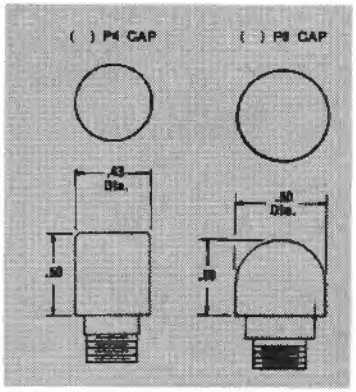

Complete Assembly Part Numbers (Includes Lamp)			
Lamp	Transparent Lens Color	( )P4 Cap	( )P8 Cap
A1H	Clear	33-30880-5P4-A1H	33-30880-5P8-A1H
	Red	33-30880-6P4-A1H	33-30880-6P8-A1H
	Amber	33-30880-8P4-A1H	33-30880-8P8-A1H
	Lunar	33-30880-17P4-A1H	33-30880-17P8-A1H
A1G	Clear	33-30881-5P4-A1G	33-30881-5P8-A1G
	Red	33-30881-6P4-A1G	33-30881-6P8-A1G
	Amber	33-30881-8P4-A1G	33-30881-8P8-A1G
	Lunar	33-30881-17P4-A1G	33-30881-17P8-A1G

Translucent colors: Not recommended.
( ) Designates color selection.

SCHEMATIC

Electroswitch Electronic Products • 2010 Yonkers Road • Raleigh, North Carolina
T 888-768-2797 • F 800-909-9171 • www.electro-nc.com

Optolite Indicators
General Purpose

INDICATOR LIGHTS

ELECTROSWITCH
•ELECTRONIC PRODUCTS
UNIT OF ELECTRO SWITCH CORP.

Miniature

Material and Finishes
Mounting tube and nuts, aluminum, black anodized per MIL-A-8625A. Lockwasher, stainless steel or steel, nickel plate. Terminals 6-32 screws, nickel plate. Round front mounting nut, bright nickel plate.
Lamp
T-1 ¾ midget flange base.
Mounting
Assembly mounts from rear of panel. All mounting hardware supplied. Recommended mounting hole .500 in. +/- .015 in. dia.

BASE ASSEMBLY
14-32280

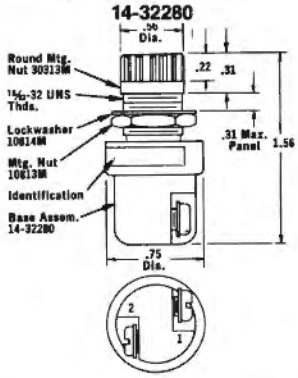

CAP STYLES

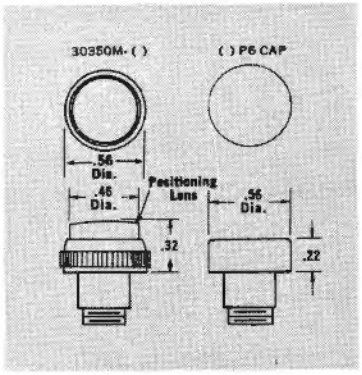

Complete Assembly Part Numbers (Less Lamp)			
Transparent Lens Colors	( ) P10 Cap	( ) P6 Cap	3035OM - ( ) Cap
Clear*	14-32280-5P10	14-32280-5P6	14-32280-5
Red	14-32280-6P10	14-32280-6P6	14-32280-6
Green	14-32280-7P10	14-32280-7P6	14-32280-7
Amber	14-32280-8P10	14-32280-8P6	14-32280-8
Blue	14-32280-11P10	14-32280-11P6	14-32280-11
Yellow	14-32280-12P10	14-32280-12P6	14-32280-12
Lunar	14-32280-17P10	14-32280-17P6	14-32280-17

Translucent colors: add "TL" as suffix to Part No.
*White if translucent color specified.
( ) Designates color selection.

SCHEMATIC

Miniature

Material and Finishes
Mounting tube and nuts, aluminum, black anodized per MIL-A-8625A. Lockwasher, stainless steel or steel, nickel plate. Brass terminals, tin plated per MIL-T-10727A.
Cap Assembly
Lens, high impact-resistant plastic per L-P-349.
Lamp
T-1 ¾ midget flange base.
Mounting
Assembly mounts from rear of panel. All mounting hardware supplied. Recommended mounting hole .500 in. +/- .015 in. dia.
Weight
Approx. .2 oz. less lamp.

BASE ASSEMBLY
14-35180

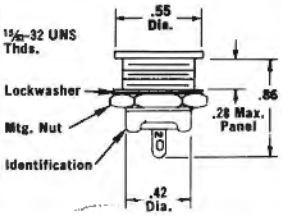

CAP STYLES

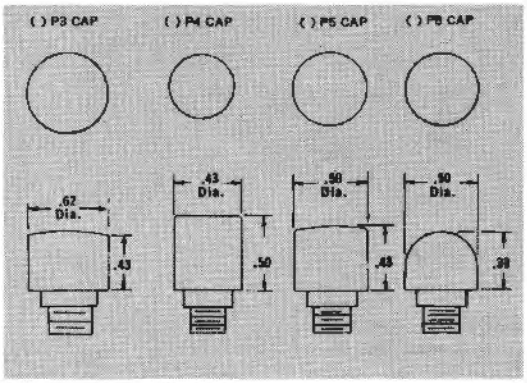

Complete Assembly Part Numbers (Less Lamp)				
Transparent Lens Colors	( )P3 Cap	( )P4 Cap	( )P5 Cap	( )P8 Cap
Clear*	14-35180-5P3	14-35180-5P4	14-35180-5P5	14-35180-5P8
Red	14-35180-6P3	14-35180-6P4	14-35180-6P5	14-35180-6P8
Green	14-35180-7P3	14-35180-7P4	14-35180-7P5	14-35180-7P8
Amber	14-35180-8P3	14-35180-8P4	14-35180-8P5	14-35180-8P8
Blue	14-35180-11P3	14-35180-11P4	14-35180-11P5	14-35180-11P8
Yellow	14-35180-12P3	14-35180-12P4	14-35180-12P5	14-35180-12P8
Orange	14-35180-16P3	14-35180-16P4	14-35180-16P5	14-35180-16P8
Lunar	14-35180-17P3	14-35180-17P4	14-35180-17P5	14-35180-17P8

Translucent colors: Add "TL" as suffix to Part No.
*White if translucent color specified.
( ) Designates color selection.

SCHEMATIC

Optolite Indicators
Watertight

INDICATOR LIGHTS

ELECTROSWITCH
•ELECTRONIC PRODUCTS
UNIT OF ELECTRO SWITCH CORP.

Sub-Miniature, Watertight

Material and Finishes
Mounting tube, black glass filled nylon per MIL-M-19887. Mounting nut, aluminum, black anodized per MIL-A-8625A. Lockwasher, stainless steel or steel, nickel plate. Brass terminals, tin plated per MIL-T-10727A.

Cap Assembly
Lens, high impact-resistant plastic per L-P-349. Standard colors are transparent.

Lamp
T-1 sub-midget flange base.

Mounting
Assembly mounts from front of panel. All mounting hardware supplied.

Weight
Approx. .12 oz. less lamp.

Base Assembly
95-33180

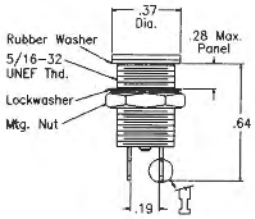

Cap Styles

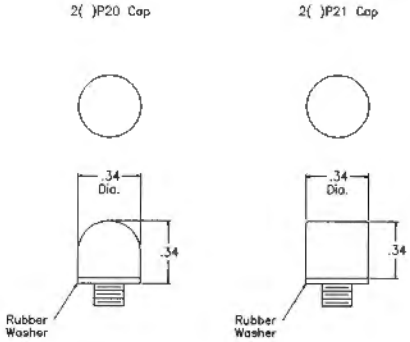

Schematic

Complete Assembly Part Numbers (Less Lamp)

Transparent Lens Colors	2( )P20 Cap	2( )P21 Cap
Clear*	95-33180-25P20	95-33180-25P21
Red	95-33180-26P20	95-33180-26P21
Green	95-33180-27P20	95-33180-27P21
Amber	95-33180-28P20	95-33180-28P21
Blue	95-33180-211P20	95-33180-211P21
Yellow	95-33180-212P20	95-33180-212P21
Orange	95-33180-216P20	95-33180-216P21
Off-white	95-33180-217P20	95-33180-217P21

Translucent colors: Add "TL" as suffix to Part Number.
*White if translucent color specified. ( ) Designates color selection.

Miniature, Neon Watertight

Material and Finishes
Mounting tube and nuts, aluminum, black anodized per MIL-A-8625A. Lockwasher, stainless steel or steel, nickel plate. Brass terminals, tin plated per MIL-T-10727A. "O" ring, silicone rubber.

Cap Assembly
Lens, high impact-resistant plastic per L-P-349. Standard colors are transparent.

Lamp
C7A (std.) or C9A (high brightness) T2 neon lamp is furnished with each assembly.

Mounting
Assembly mounts from front of panel. All mounting hardware supplied.

Weight
Approx. .3 oz. less lamp.

Base Assembly
31-36680 (Internal Resistor 68kΩ) LH88/1 §
31-36681 (Internal Resistor 27kΩ) LH88/2 §

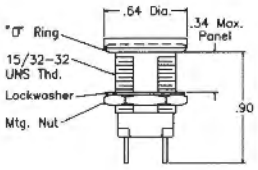

Cap Styles

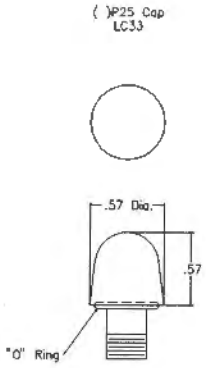

Panel Cutout

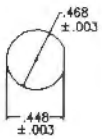

Schematic

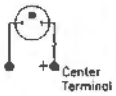

Complete Assembly Part Numbers (Includes Lamp)

Lamp	Transparent Lens Colors	( )P25 Cap
C7A	Clear	31-36680-5P25-C7A
	Red	31-36680-6P25-C7A
	Amber	31-36680-8P25-C7A
	Off-white	31-36680-17P25-C7A
C9A	Clear	31-36681-5P25-C9A
	Red	31-36681-6P25-C9A
	Amber	31-36681-8P25-C9A
	Off-white	31-36681-17P25-C9A

Translucent colors: Not recommended. § Assembly conforms to requirements of MIL-L-3661. See page 35 for complete listing of MS Part Numbers and Type Designations. ( ) Designates color selection.

Electroswitch Electronic Products • 2010 Yonkers Road • Raleigh, North Carolina
T 888-768-2797 • F 800-909-9171 • www.electro-nc.com

Optolite Indicators
Watertight

INDICATOR LIGHTS

ELECTROSWITCH
•ELECTRONIC PRODUCTS
UNIT OF ELECTRO SWITCH CORP.

Miniature, Watertight

Material and Finishes
Mounting tube, aluminum, black anodized per MIL-A-8625A. Mounting nut, steel cad plate per QQ-P-416. Lockwasher, stainless steel or steel, nickel plate. Brass terminals, tin plated per MIL-T-10727A. "O" ring, silicone rubber.
Cap Assembly
Lens, high impact-resistant plastic per L-P-349.
Lamp
T-1 ¾ midget flange base.
Mounting
Assembly mounts from front of panel. All mounting hardware supplied.
Weight
Approx. .3 oz. less lamp.

Base Assembly
11-35182 LH89/1 §

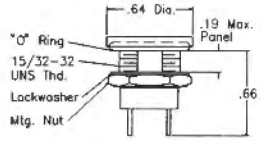

Cap Styles

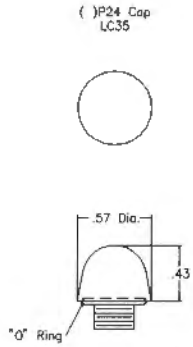

Panel Cutout

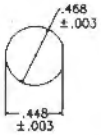

Schematic

Complete Assembly Part Numbers (Less Lamp)

Transparent Lens Colors	( )P24 Cap
Clear*	11-35182-5P24
Red	11-35182-6P24
Green	11-35182-7P24
Amber	11-35182-8P24
Blue	11-35182-11P24
Yellow	11-35182-12P24
Orange	11-35182-16P24
Off-white	11-35182-17P24

Translucent colors: Add "TL" as suffix to Part Number. § Assembly conforms to requirements of MIL-L-3661. See page 35 for complete listing of MS Part Numbers and Type Designations. *White if translucent color specified. ( ) Designates color selection.

Miniature, Watertight

Material and Finishes
Mounting tube and nuts, aluminum, black anodized per MIL-A-8625A. Lockwasher, stainless steel. Brass terminals, tin plated per MIL-T-10727A. Rubber boot and washer, silicone rubber.
Cap Assembly
Lens, high impact-resistant plastic per L-P-349. Lens holders, aluminum, black anodized.
Lamp
T- 1 ¾ midget flange base. See Lamp Selection Guide. Choose from Group A.
Mounting
Assembly mounts from rear of panel. All mounting hardware supplied. Recommended mounting hole .500 in. ±.015 in. dia.
Weight
Approximately .3 oz. less lamp.

Base Assembly
15-30083

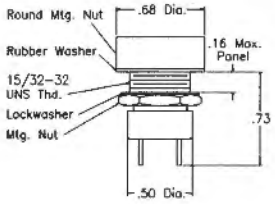

Cap Styles

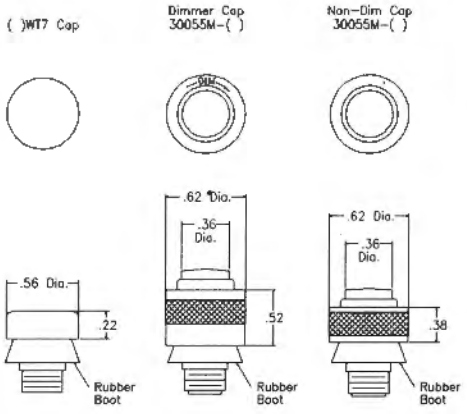

Schematic

Complete Assembly Part Numbers (Less Lamp)

Transparent Lens Colors	( )WT7 Cap	30055M-( ) Dimmer Cap	30055M-( ) Non-Dim Cap
Clear*	15-30083-5WT7	15-30083-1	15-30083-5
Red	15-30083-6WT7	15-30083-2	15-30083-6
Green	15-30083-7WT7	15-30083-3	15-30083-7
Amber	15-30083-8WT7	15-30083-4	15-30083-8
Blue	15-30083-11WT7	15-30083-10	15-30083-11
Yellow	15-30083-12WT7	15-30083-14	15-30083-12
Orange	15-30083-16WT7	—	15-30083-16
Off-white	15-30083-17WT7	—	15-30083-17

Translucent colors: Add "TL" as suffix to Part Number.
*White if translucent color specified. ( ) Designates color selection.

Optolite Indicators
Watertight

INDICATOR LIGHTS

ELECTROSWITCH
•ELECTRONIC PRODUCTS
UNIT OF ELECTRO SWITCH CORP.

Miniature, Watertight

VM-700 Type
Incandescent Vaportight
Size T-3 ¼

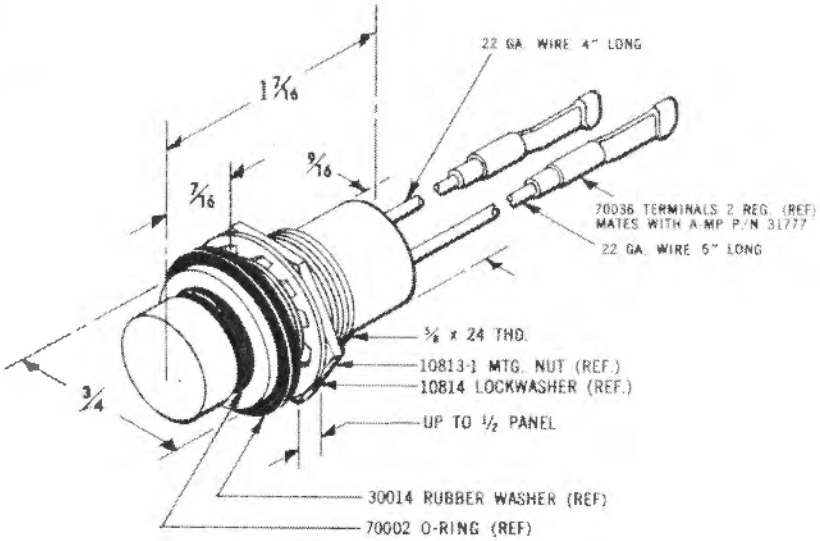

Cap
Transparent plastic with O-ring. If translucent cap is desired, add "TL" to final dash number

Base Assembly
Aluminum - standard finish is bright anodized

Light Assembly
Completely sealed and will withstand immersion in liquid

Weight
Approx. 1 oz., less lamp

Electroswitch Electronic Products • 2010 Yonkers Road • Raleigh, North Carolina
T 888-768-2797 • F 800-909-9171 • www.electro-nc.com

Optolite Indicators
E.M.I. Supressed

INDICATOR LIGHTS

ELECTROSWITCH
•ELECTRONIC PRODUCTS
UNIT OF ELECTRO SWITCH CORP.

Sub-Miniature, Optional E.M.I. Suppression

Material and Finishes
Mounting tube and nut, stainless steel, passivated per MIL-S-5002. Wire leads #26 GA silver coated, stranded copper with TFE-flurocarbon insulation.
Lens Assembly
Lens, high impact-resistant plastic per L-P-393 (polycarbonate).
Lamp
MS24367-683 subminiature T-1 with 5.0V at .060 amp rating (non-replaceable).
Mounting
Assembly mounts from front of panel. All mounting hardware supplied. E.M.I. suppressed assemblies require paint free area on back side of mounting for E.M.I. conductivity.
Weight
Approx. .005 lbs. max.

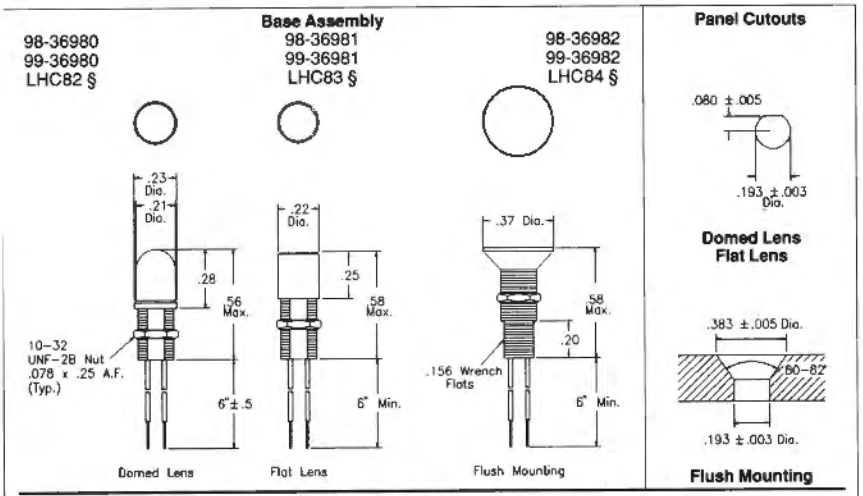

Complete Assembly Part Numbers (Includes Lamp)

Transparent Lens Colors	E.M.I. Suppressed			Not E.M.I. Suppressed		
	Domed Lens	Flat Lens	Flush Mounting	Domed Lens	Flat Lens	Flush Mounting
Clear*	98-36980-5	98-36981-5	98-36982-5	99-36980-5	99-36981-5	99-36982-5
Red	98-36980-6	98-36981-6	98-36982-6	99-36980-6	99-36981-6	99-36982-6
Green	98-36980-7	98-36981-7	98-36982-7	99-36980-7	99-36981-7	99-36982-7
Amber	98-36980-8	98-36981-8	98-36982-8	98-36980-8	99-36981-8	99-36982-8
Blue	98-36980-11	98-36981-11	98-36982-11	99-36980-11	99-36981-11	99-36982-11
Yellow	98-36980-12	98-36981-12	98-36982-12	99-36980-12	99-36981-12	99-36982-12
Orange	98-36980-16	98-36981-16	98-36982-16	99-36980-16	99-36981-16	99-36982-16
Off-white	98-36980-17	98-36981-17	98-36982-17	99-36980-17	99-36981-17	99-36982-17

Translucent colors: Add "TL" as suffix to Part Number. § Assembly conforms to requirements of MIL-L-3661. See page 35 for complete listing of MS Part Numbers and Type Designations. *White if translucent color specified.

Miniature, Neon E.M.I. Suppressed

38-36180 Type

Material and Finishes
Mounting tube and nuts, brass plated, nickel plated per QQ-N-290. Lockwasher, stainless steel or steel, nickel plate. Brass terminals, tin plated per MIL-T-10727A.
Cap Assembly
Lens, high impact-resistant plastic per L-P-349. Standard colors are transparent.
Lamp
C7A (std.) or C9A (high brightness) T2 neon lamp is furnished with each assembly.
Mounting
Assembly mounts from front of panel. All mounting hardware supplied. Recommended mounting hole .500 in. +/- .015 in. dia. Paint free area around backside hole required for E.M.I. conductivity.
Weight
Approx. .3 oz. less lamp.

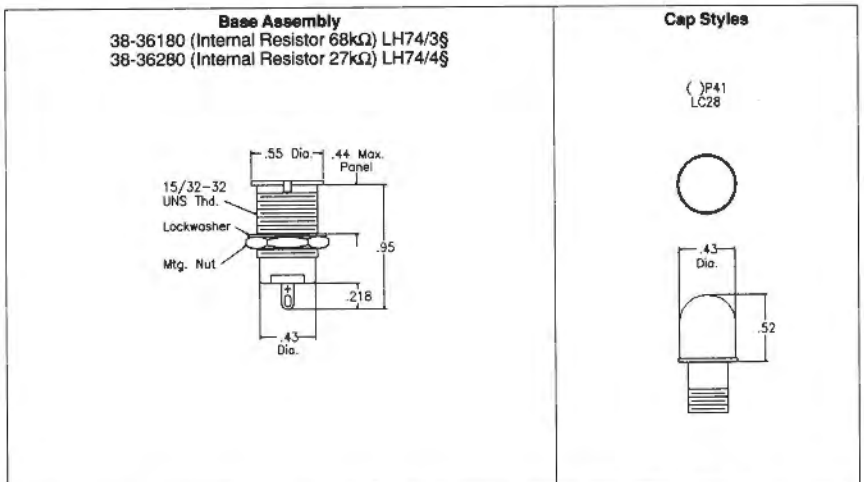

Complete Assembly Part Numbers (Includes Lamp)

Lamp	Transparent Lens Colors	( )P41 Cap
C7A	Clear	38-36180-5P41-C7A
	Red	38-36180-6P41-C7A
	Amber	38-36180-8P41-C7A
	Off-white	38-36180-17P41-C7A
C9A	Clear	38-36280-5P41-C9A
	Red	38-36280-6P41-C9A
	Amber	38-36280-8P41-C9A
	Off-white	38-36280-17P41-C9A

Translucent colors: Not recommended. § Assembly conforms to requirements of MIL-L-3661. See page 35 for complete listing of MS Part Numbers and Type Designations. ( ) Designates color selection.

Optolite Indicators
E.M.I. Supressed

INDICATOR LIGHTS

ELECTROSWITCH
•ELECTRONIC PRODUCTS
UNIT OF ELECTRO SWITCH CORP.

Miniature, E.M.I. Suppressed

18-36880 Type

Material and Finishes
Mounting tube and nut, brass, bright nickel finish. Lockwasher stainless steel or steel nickel plate. Brass terminals, tin plated per MIL-T-10727A. "O" ring, silicone rubber.
Cap Assembly
Lens, high impact-resistant plastic per L-P-349 Lens holders, brass, bright nickel plated.
Lamp
T-1 ¾ midget flange base.
Mounting
Assembly mounts from front of panel. All mounting hardware supplied. Recommended mounting hole .500 in. ± 015 in. dia. Paint free area around back side of hole required for E.M.I. conductivity.
Weight
Approximately .35 oz. less lamp.

Base Assembly
18-36880 LH73/2 §

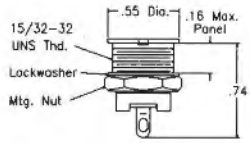

Cap Styles

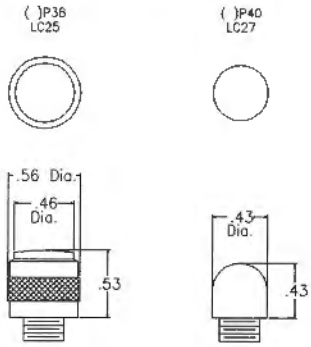

Panel Cutout

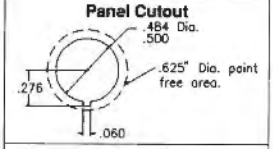

Schematic

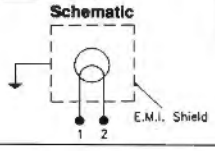

Complete Assembly Part Numbers (Less Lamp)

Transparent Lens Colors	( )P38 Cap	( )P40 Cap
Clear*	18-36880-5P38	18-36880-5P40
Red	18-36880-6P38	18-36880-6P40
Green	18-36880-7P38	18-36880-7P40
Amber	18-36880-8P38	18-36880-8P40
Blue	18-36880-11P38	18-36880-11P40
Yellow	18-36880-12P38	18-36880-12P40
Orange	18-36880-16P38	18-36880-16P40
Off-white	18-36880-17P38	18-36880-17P40

Translucent colors: Add "TL" as suffix to Part Number. § Assembly conforms to requirements of MIL-L-3661. See page 35 for complete listing of MS Part Numbers and Type Designations. *White if translucent color specified. ( ) Designates color selection.

Miniature, E.M.I. Suppressed, Watertight

18-36680 Type

Material and Finishes
Mounting tube and exposed hardware, brass, bright nickel plate per QQ-N-290. Lockwasher, stainless steel or steel, nickel plate. Terminals, brass, tin plated per MIL-T-10727A.
Cap Assembly
Lens is high impact-resistant plastic per L-P-349.
Lamp
T-1 ¾ midget flange base.
Mounting
Assembly mounts from front of panel. All mounting hardware supplied. E.M.I. suppressed assemblies require paint free area on back side of mounting hole for E.M.I. conductivity.
Weight
Approx. .35 oz less lamp.

Base Assembly
18-36680
38-36680 (Internal Resistor 68kΩ) §
38-36681 (Internal Resistor 27kΩ) §

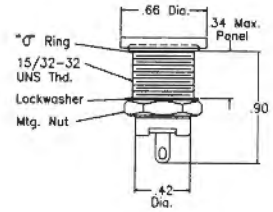

§ Specify 38-36681-( ) for 27kΩ internal resistor (C9A neon lamp) or 38-36680-( ) for 68kΩ internal resistor (C7A neon lamp).
Neon Lamp (C7A or C9A) must be specified when ordering.

Cap Styles

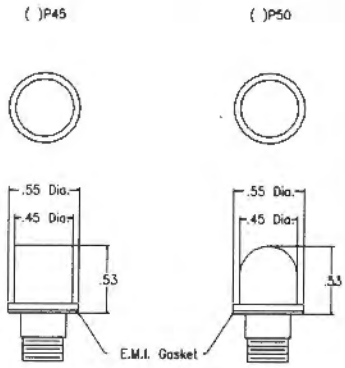

Schematic

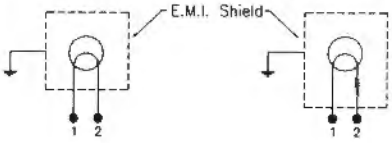

Complete Assembly Part Numbers (Less Lamp)

Transparent Lens Colors	( )P45 Cap	( )P50 Cap
Clear*	18-36680-5P45	18-36680-5P50
Red	18-36680-6P45	18-36680-6P50
Green	18-36680-7P45	18-36680-7P50
Amber	18-36680-8P45	18-36680-8P50
Blue	18-36680-11P45	18-36680-11P50
Yellow	18-36680-12P45	18-36680-12P50
Orange	18-36680-16P45	18-36680-16P50
Off-white	18-36680-17P45	18-36680-17P50

Translucent colors: Add "TL" as suffix to Part Number.
*White if translucent color specified.
( ) Designates color selection.

Electroswitch Electronic Products • 2010 Yonkers Road • Raleigh, North Carolina
T 888-768-2797 • F 800-909-9171 • www.electro-nc.com

Optolite Indicators
Press-to-Test

INDICATOR LIGHTS

ELECTROSWITCH
•ELECTRONIC PRODUCTS
UNIT OF ELECTRO SWITCH CORP.

Miniature, Optional Press-to-Test

59-52280 Type

Material and Finishes
Mounting tube and knurled nut, clear anodized per MIL-A-8625A. Mounting nut and key washer, brass, nickel plate. Lockwasher, stainless steel or steel, nickel plate, Brass terminals, tin plated per MIL-T-10727A.
Cap Assembly
Lens, high impact-resistant plastic per L-P-349. Friction fit lens caps, rotatable or keyed. Uses Presslite friction cap pushbuttons.
Lamp
T-1 ¾ midget flange base.
Mounting
Assembly mounts from rear of panel. All mounting hardware supplied. Recommended mounting hole, see drawing.
Weight
Approximately .5 oz. less lamp.

Base Assembly
59-52280 (Press-to-Test)
59-52380

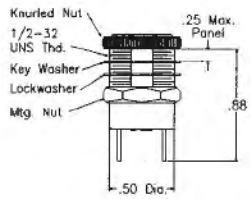

Panel Cutouts

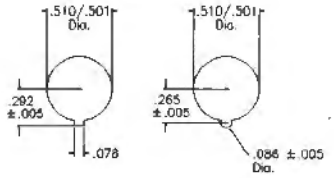

Schematics

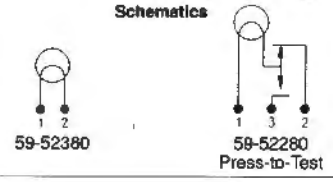

Cap Styles

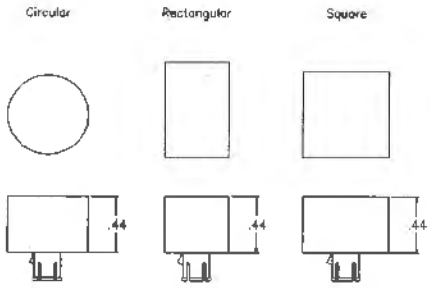

Complete Assembly Part Numbers

To order complete assembly specify:

59-52380 – ( ) – ( )

Base Assembly P/N 59-52280 P/N 59-52380 | Cap Assembly P/N (See page 8) | Lamp (See page 36)

Miniature, Press-to-Test

01-91180 Type

Material and Finishes
Mounting tube and nuts, aluminum, black anodized per MIL-A-8625A. Lockwasher, stainless steel. Brass terminals, tin plated per MIL-T-10727A.
Cap Assembly
Lens, high impact-resistant plastic per L-P-349, NVG Green, flat glass lens. Lens holders, aluminum, black anodized.
Lamp
T-1 ¾ midget flange base.
Mounting
Assembly mounts from rear of panel. All mounting hardware supplied. Recommended mounting hole .500 in. ±.015 dia.
Identification
Identified with MS P/N and base assembly number.
Weight
Approximately .5 oz. less lamp.

Base Assembly
01-91180

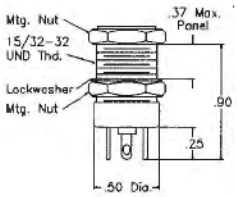

Schematic

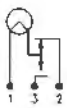

Cap Styles

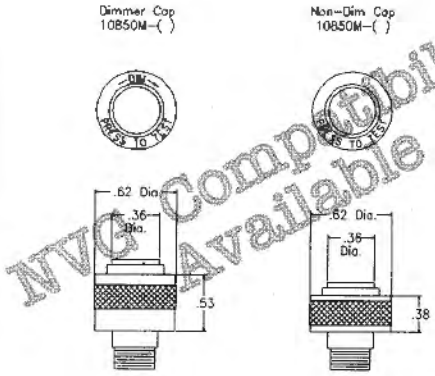

NVG Compatibility Available

Complete Assembly Part Numbers (Less Lamp)

Transparent Lens Colors	10850M-( ) Dimmer Cap		10850M-( ) Non Dim Cap	
	Part No.	MS Part No.	Part No.	MS Part No.
Clear*	01-91180-1	MS25041-1	01-91180-5	MS-25041-5
Red	01-91180-2	MS25041-2	01-91180-6	MS-25041-6
Green	01-91180-3	MS25041-3	01-91180-7	MS-25041-7
Amber	01-91180-4	MS25041-4	01-91180-8	MS-25041-8
Blue	01-91180-10	MS25041-10	01-91180-11	MS-25041-11
Off-white	---	—	01-91180-17	—
NVG Green	---	MS25041-12	---	MS25041-13

Translucent colors: Add "TL" as suffix to Part Number.
*White if translucent color specified. ( ) Designates color selection.

Optolite Indicators
Press-to-Test

INDICATOR LIGHTS

ELECTROSWITCH
•ELECTRONIC PRODUCTS
UNIT OF ELECTRO SWITCH CORP.

Standard Size Press-to-Test

02-91180 Type

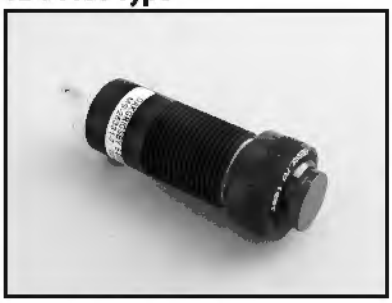

Material and Finishes
Mounting tube and nuts, aluminum, black anodized per MIL-A-8625A. Lockwasher, stainless steel. Brass terminals, tin plated per MIL-T-10727A.
Cap Assembly
Lens is high impact-resistant plastic per L-P-349. Lens holders, aluminum, black anodized.
Lamp
T-3 ¼ miniature bayonet base.
Mounting
Assembly mounts from rear of panel. All mounting hardware supplied. Recommended mounting hole .640 in. ± .015 in. dia.
Identification
Identified with MS P/N and base assembly number
Weight
Approximately .8 oz. less lamp.

Base Assembly
02-91180

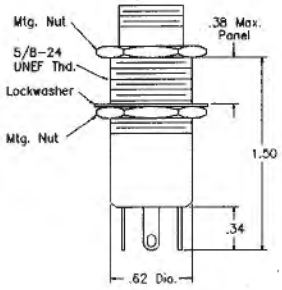

Cap Styles

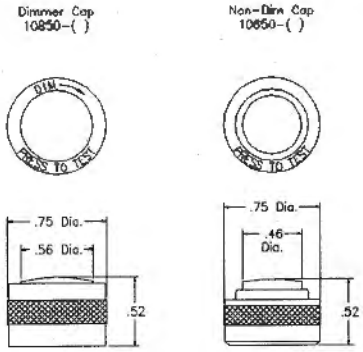

Schematic

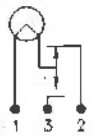

Complete Assembly Part Numbers (Less Lamp)

Transparent Lens Colors	10850-( ) Dimmer Cap		10850-( ) Non-Dim Cap	
	Part Number	MS Part Number	Part Number	MS Part Number
Clear*	02-91180-1	MS25331-1	02-91180-5	MS25331-5
Red	02-91180-2	MS25331-2	02-91180-6	MS25331-6
Green	02-91180-3	MS25331-3	02-91180-7	MS25331-7
Amber	02-91180-4	MS25331-4	02-91180-8	MS25331-8
Blue	02-91180-10	—	02-91180-11	—
Yellow	02-91180-14	—	02-91180 12	—
Off-white	—	—	02-91180-17	—

Translucent colors: Add "TL" as suffix to Part Number.
*White if translucent color specified. ( ) Designates color selection.

Miniature, Watertight, Press-to-Test

05-90880 Type

Material and Finishes
Mounting tube, black glass filled nylon per MIL-M-19887. Mounting nut aluminum, black anodized per MIL-A-8625A. Lockwasher, stainless steeel or steel, nickel plate. Brass terminals, tin plated per MIL-T-10727A. Rubber boot and washer, silicone rubber.
Cap Assembly
Lens, high impact-resistant plastic per L-P-349. Lens holders are aluminum, black anodized.
Lamp
T-1 ¾ midget flange base.
Mounting
Assembly mounts from front of panel. All mounting hardware supplied. Recommended mounting hole .500 in. +/- .015 in. dia.
Weight
Approx. .3 oz. less lamp.

Base Assembly
05-90880 (Terminals Potted)

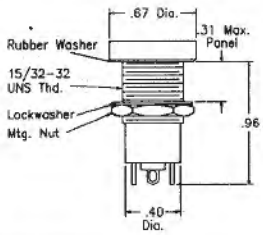

Cap Styles

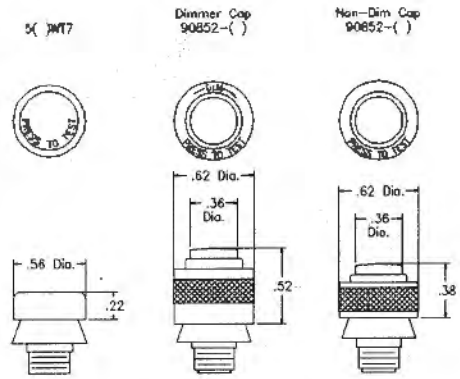

Schematic

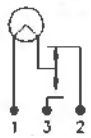

Complete Assembly Part Numbers (Less Lamp)

Transparent Lens Colors	05-90880 (Terminals Potted)		
	5( )WT7 Cap	90852-( ) Dimmer Cap	90852-( ) Non-Dim Cap
Clear*	05-90880-55WT7	05-90880-1	05-90880-5
Red	05-90880-56WT7	05-90880-2	05-90880-6
Green	05-90880-57WT7	05-90880-3	05-90880-7
Amber	05-90880-58WT7	05-90880-4	05-90880-8
Blue	05-90880-511WT7	05-90880-10	05-90880-11
Yellow	05-90880-512WT7	05-90880-14	05-90880-12
Orange	05-90880-516WT7	—	05-90880-16
Off-white	05-90880-517WT7	—	05-90880-17

Translucent colors: Add "TL" as suffix to Part Number.
*White if translucent color specified. ( ) Designates color selection.

Electroswitch Electronic Products • 2010 Yonkers Road • Raleigh, North Carolina
T 888-768-2797 • F 800-909-9171 • www.electro-nc.com

Optolite Indicators
Press-to-Test

INDICATOR LIGHTS

ELECTROSWITCH
•ELECTRONIC PRODUCTS
UNIT OF ELECTRO SWITCH CORP.

Miniature, Watertight Press-to-Test

05-91182 Type

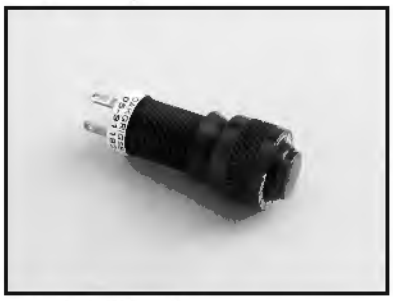

Material and Finishes
Mounting tube and nuts, aluminum, black anodized per MIL-A-8625A. Lockwasher, stainless steel or steel, nickel plate. Brass terminals, tin plated per MIL-T-10727A. Rubber boot and washer, silicone rubber.
Cap Assembly
Lens, high impact-resistant plastic per L-P-349 Lens holders are aluminum, black anodized.
Lamp
T-1 ¾ midget flange base.
Mounting
Assembly mounts from rear of panel. All mounting hardware supplied. Recommended mounting hole .500 in. ± .015 in. dia.
Weight
Approximately .44 oz. less lamp.

Base Assembly
05-91182

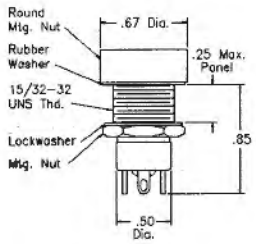

Cap Styles

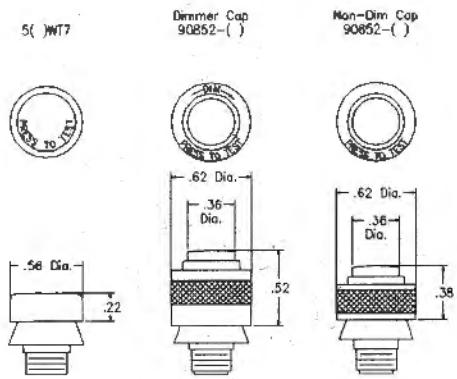

Schematic

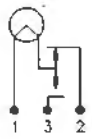

Complete Assembly Part Numbers (Less Lamp)

Transparent Lens Colors	5( )WT7 Cap	90852-( ) Dimmer Cap	90852-( ) Non-Dim Cap
Clear*	05-91182-55WT7	05-91182-1	05-91182-5
Red	05-91182-56WT7	05-91182-2	05-91182-6
Green	05-91182-57WT7	05-91182-3	05-91182-7
Amber	05-91182-58WT7	05-91182-4	05-91182-8
Blue	05-91182-511WT7	05-91182-10	05-91182-11
Yellow	05-91182-512WT7	05-91182-14	05-91182-12
Orange	05-91182-516WT7	–	05-91182-16
Off-white	05-91182-517WT7	–	05-91182-17

Translucent colors: Add "TL" as suffix to Part Number.
*White if translucent color specified. ( ) Designates color selection.

Watertight, Press-to-Test

06-91182 Type

Material and Finishes
Mounting tube and nuts, aluminum, black anodized per MIL-A-8625A. Lockwasher, stainless steel or steel, nickel plate. Brass terminals, tin plated per MIL-T-10727A. Rubber boot and washer, silicone rubber.
Cap Assembly
Lens, high impact-resistant plastic per L-P-349. Lens holders, aluminum, black anodized.
Lamp
T-3 ¼ miniature bayonet base.
Mounting
Assembly mounts from rear of panel. All mounting hardware supplied. Recommended mounting hole .640 in. ± .015 in. dia.
Weight
Approximately .85 oz. less lamp.

Base Assembly
06-91182

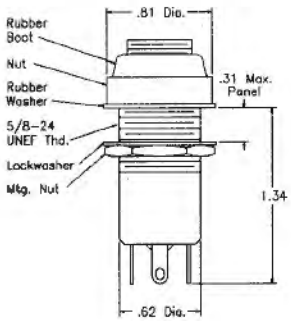

Cap Styles

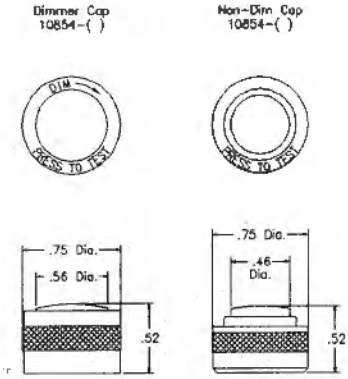

Schematic

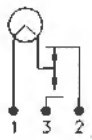

Complete Assembly Part Numbers (Less Lamp)

Transparent Lens Colors	10854-( ) Dimmer Cap	10854-( ) Non-Dim Cap
Clear*	06-91182-1	06-91182-5
Red	06-91182-2	06-91182-6
Green	06-91182-3	06-91182-7
Amber	06-91182-4	06-91182-8
Blue	06-91182-10	06-91182-11
Yellow	06-91182-14	06-91182-12
Orange	---	06-91182-16
Off-white	---	06-91182-17

Translucent colors: Add "TL" as suffix to Part Number.
*White if translucent color specified. ( ) Designates color selection.

Optolite Indicators
Press-to-Test

INDICATOR LIGHTS

ELECTROSWITCH
•ELECTRONIC PRODUCTS
UNIT OF ELECTRO SWITCH CORP.

Miniature, Press-to-Test

Material and Finishes
Mounting tube, black glass filled nylon per MIL-M-19887. Mounting nut aluminum, black anodized per MIL-A-8625A. Lockwasher, stainless steeel or steel, nickel plate. Brass terminals, tin plated per MIL-T-10727A.
Cap Assembly
Lens, high impact-resistant plastic per L-P-349. Lens holders are aluminum, black anodized.
Lamp
T-1 ¾ midget flange base.
Mounting
Assembly mounts from front of panel. All mounting hardware supplied. Recommended mounting hole .500 in. +/- .015 in. dia.
Weight
Approx. .9 oz. less lamp.

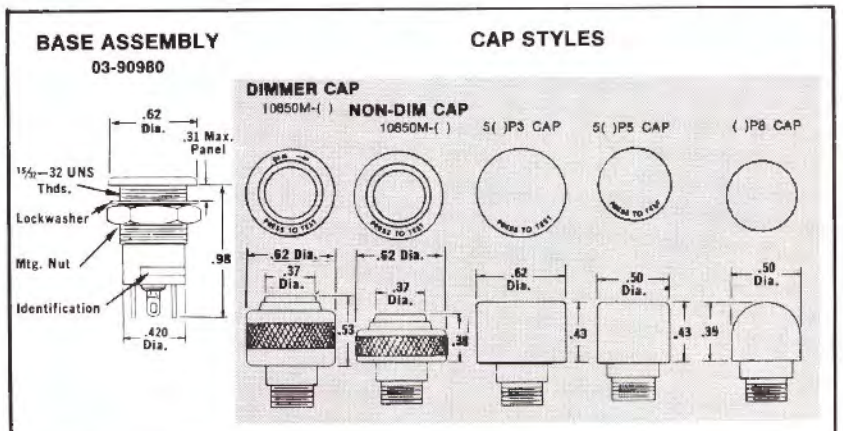

Complete Assembly Part Numbers (Less Lamp)					
Transparent Lens Colors	10850M-( ) Dimmer Cap	10850M-( ) Non-Dim Cap	5( )P3 Cap	5( )P5 Cap	( )P8 Cap
Clear	03-90980-1	03-90980-5	03-90980-55P3	03-90980-55P5	03-90980-5P8
Red	03-90980-2	03-90980-6	03-90980-56P3	03-90980-56P5	03-90980-6P8
Green	03-90980-3	03-90980-7	03-90980-57P3	03-90980-57P5	03-90980-7P8
Amber	03-90980-4	03-90980-8	03-90980-58P3	03-90980-58P5	03-90980-8P8
Blue	03-90980-10	03-90980-11	03-90980-511P3	03-90980-511P5	03-90980-11P8
Yellow	03-90980-14	03-90980-12	03-90980-512P3	03-90980-512P5	03-90980-12P8
Orange	——	03-90980-16	03-90980-516P3	03-90980-516P5	03-90980-16P8
Lunar	——	03-90980-17	03-90980-517P3	03-90980-517P5	03-90980-17P8

Translucent colors: Add "TL" as suffix to Part No.
*White if translucent color specified.
( ) Designates color selection.

SCHEMATIC

General Purpose, Press-to-Test

Material and Finishes
Mounting tube, aluminum, black anodized per MIL-A-8625A. Mounting nut, steel cad plate per QQ-P-416. Lockwasher, stainless steel or steel, nickel plate. Brass terminals, tin plated per MIL-T-10727A.
Cap Assembly
Lens, high impact-resistant plastic per L-P-349. Standard colors are semi-diffusing.
Lamp
T-3 ¼ miniature bayonet base.
Mounting
Assembly mounts from front of panel. All mounting hardware supplied. Recommended mounting hole .640 in. +/- .015 in. dia.
Weight
Approx. .55 oz. less lamp.

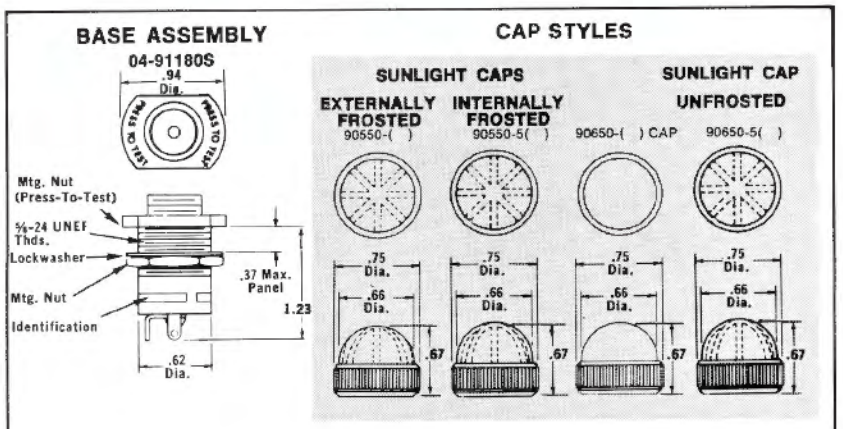

Complete Assembly Part Number (Less Lamp)				
Semi-Diffusing Lens Colors	90550 - ( ) Sunlight Cap	90550 - 5( ) Sunlight Cap	90650 - ( ) Cap	90650 - 5( ) Sunlight Cap
Lunar	04-VM905- 5	04-VM905- 55	04-VM906- 5	04-VM906- 55
Red	04-VM905- 6	04-VM905- 56	04-VM906- 6	04-VM906- 56
Green	04-VM905- 7	04-VM905- 57	04-VM906- 7	04-VM906- 57
Amber	04-VM905- 8	04-VM905- 58	04-VM906- 8	04-VM906- 58
Blue	04-VM905-11	04-VM905-511	04-VM906-11	04-VM906-511

( ) Designates color selection.

SCHEMATIC

Electroswitch Electronic Products • 2010 Yonkers Road • Raleigh, North Carolina
T 888-768-2797 • F 800-909-9171 • www.electro-nc.com

Optolite Indicators
Press-to-Test

INDICATOR LIGHTS

ELECTROSWITCH
•ELECTRONIC PRODUCTS
UNIT OF ELECTRO SWITCH CORP.

Miniature, Press-to-Test

03-93480 Type
03-93481 Type

Materials and Finishes
Mounting tube and nuts are aluminum, black anodized per MIL-A-8625A. Lockwasher, stainless steel or steel, nickel plated. Terminals are 4-40 screws, nickel plate QQ-N-290.
Cap Assembly
Lens is high impact-resistant plastic per L-P-349.
Lamp
T-1 ¾ midget flange base. Standard colors are transparent. Also available in translucent or diffusing caps.
Mounting
Assembly mounts from rear of panel. All mounting hardware supplied. Recommended mounting hole .500 ± .015 diameter.
Weight
Approximately .50 oz. less lamp.

BASE ASSEMBLY
03-93480

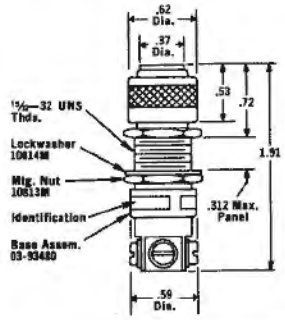

CAP STYLES

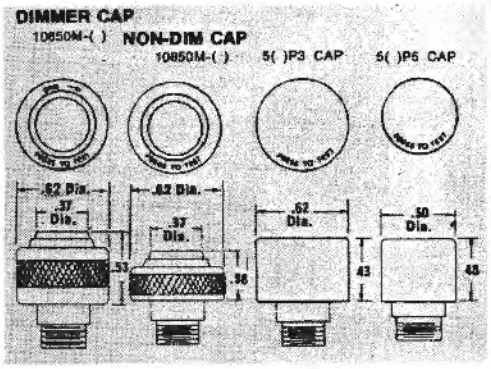

Complete Assembly Part Numbers (Less Lamp)				
Transparent Lens Colors	10850M - ( ) Dimmer Cap	10850M - ( ) Non-Dim Cap	5 ( ) P3 Cap	5 ( ) P5 Cap
Clear*	03-93480-1	03-93480-5	03-93480-55P3	03-93480-55P5
Red	03-93480-2	03-93480-6	03-93480-56P3	03-93480-56P5
Green	03-93480-3	03-93480-7	03-93480-57P3	03-93480-57P5
Amber	03-93480-4	03-93480-8	03-93480-58P3	03-93480-58P5
Blue	03-93480-11	03-93480-11	03-93480-511P3	03-93480-511P5
Yellow	03-93480-14	03-93480-12	03-93480-512P3	03-93480-512P5
Lunar		03-93480-17	03-93480-517P3	03-93480-517P5

Translucent colors: Add "TL" as suffix to part no.
* White if translucent color specified.
( ) Designates color selection.

SCHEMATICS

BASE ASSEMBLY
03-93481

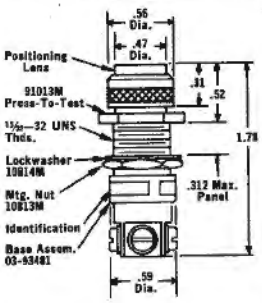

CAP STYLES

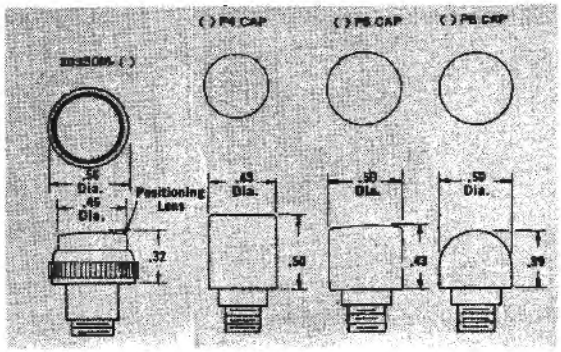

Complete Assembly Part Numbers (Less Lamp)				
Transparent Lens Colors	30350 - ( ) Cap	( ) P6 Cap	( ) P4 Cap	( ) P5 Cap
Clear*	03-93481-5	03-93481-5P6	03-93481-5P4	03-93481-5P5
Red	03-93481-6	03-93481-6P6	03-93481-6P4	03-93481-6P5
Green	03-93481-7	03-93481-7P6	03-93481-7P4	03-93481-7P5
Amber	03-93481-8	03-93481-8P6	03-93481-8P4	03-93481-8P5
Blue	03-93481-11	03-93481-11P6	03-93481-11P4	03-93481-11P5
Yellow	03-93481-12	03-93481-12P6	03-93481-12P4	03-93481-12P5
Lunar	03-93481-17	03-93481-17P6	03-93481-17P4	03-93481-17P5

Translucent Colors: Add "TL" as suffix to Part No.
*White if translucent color specified.
( ) Designates color selection.*

SCHEMATIC

Optolite Indicators
Press-to-Test

INDICATOR LIGHTS

ELECTROSWITCH
•ELECTRONIC PRODUCTS
UNIT OF ELECTRO SWITCH CORP.

Miniature, Press-to-Test

03-91080 Type

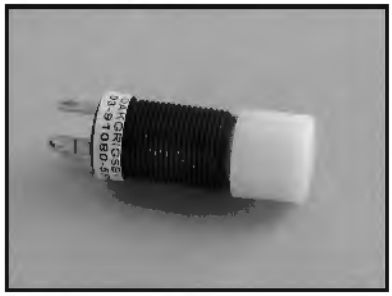

Material and Finishes
Mounting tube and nuts, aluminum, black anodized per MIL-A-8625A. Lockwasher, stainless steel. Brass terminals, tin plated per MIL-T-10727A.
Cap Assembly
Lens, high impact-resistant plastic per L-P-349.
Lamp
T-1 ¾ midget flange base. See Lamp Selection Guide.
Mounting
Assembly mounts from rear of panel. All mounting hardware supplied. Recommended mounting hole .500 in. ±015 in. dia.
Weight
Approximately .4 oz. less lamp.

Base Assembly
03-91080

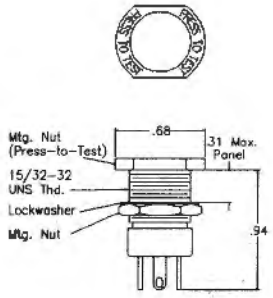

Cap Styles

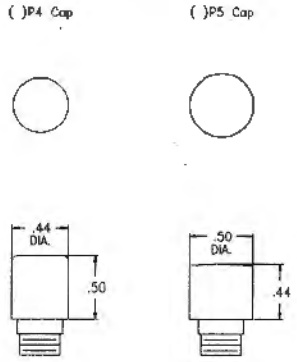

Schematic

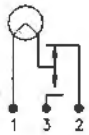

Complete Assembly Part Numbers (Less Lamp)

Transparent Lens Colors	( )P4 Cap	( )P5 Cap
Clear*	03-91080-5P4	03-91080-5P5
Red	03-91080-6P4	03-91080-6P5
Green	03-91080-7P4	03-91080-7P5
Amber	03-91080-8P4	03-91080-8P5
Blue	03-91080-11P4	03-91080-11P5
Yellow	03-91080-12P4	03-91080-12P5
Orange	03-91080-16P4	03-91080-16P5
Off-white	03-91080-17P4	03-91080-17P5

Translucent colors: Add "TL" as suffix to Part Number.
*White if translucent color specified. ( ) Designates color selection.

Cap Styles

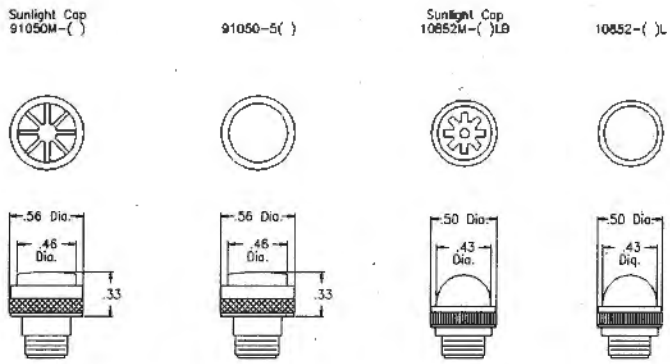

Complete Assembly Part Numbers (Less Lamp)

Transparent Lens Colors	91050M-( ) Sunlight Cap	91050M-5( ) Cap	10852M-( )LB Sunlight Cap	10852M-( )L Cap
Clear*	03-91080-5	03-91080-55	03-91080-5LB	03-91080-5L
Red	03-91080-6	03-91080-56	03-91080-6LB	03-91080-6L
Green	03-91080-7	03-91080-57	03-91080-7LB	03-91080-7L
Amber	03-91080-8	03-91080-58	03-91080-8LB	03-91080-8L
Blue	03-91080-11	03-91080-511	03-91080-11LB	03-91080-11L
Yellow	03-91080-12	03-91080-512	03-91080-12LB	03-91080-12L
Off-white	03-91080-17	03-91080-517	03-91080-17LB	03-91080-17L

Translucent colors: Add "TL" as suffix to Part Number, not recommended for sunlight caps.
Frosted lens: For 10852M caps only--Add "EF" (externally frosted) or "IF" (internally frosted) as suffix to Part Number.
*White if translucent color specified. ( ) Designates color selection.

Electroswitch Electronic Products • 2010 Yonkers Road • Raleigh, North Carolina
T 888-768-2797 • F 800-909-9171 • www.electro-nc.com

Optolite Indicators
Press-to-Test

INDICATOR LIGHTS

ELECTROSWITCH
•ELECTRONIC PRODUCTS
UNIT OF ELECTRO SWITCH CORP.

Miniature, E.M.I. Supressed Watertight, Press-to-Test

08-83283 Type

Material and Finishes
Round mounting nut, aluminum, black anodized per MIL-A-8625A. Mounting tube and mounting nut, bright nickel plated per QQ-N-290. Lockwasher, steel, nickel plated. Rubber boot and washer, silicone rubber Brass terminals, gold plated per MIL-G-45204,
Cap Assembly
Lens, high impact-resistant plastic per L-P-349. Lens holders, aluminum, black anodized.
Lamp
T-1 ¾ midget flange base.
Mounting
Assembly mounts from rear of panel. All mounting hardware supplied. Flat on mounting tube provides for keyed installation.
Weight
Approximately .6 oz. less lamp.

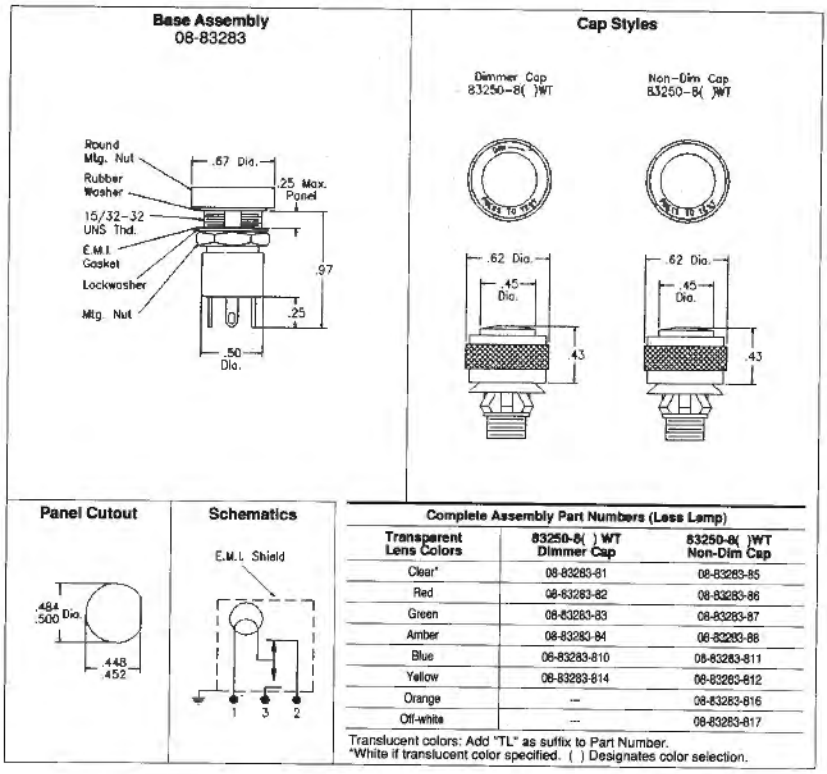

Complete Assembly Part Numbers (Less Lamp)

Transparent Lens Colors	83250-8( ) WT Dimmer Cap	83250-8( )WT Non-Dim Cap
Clear*	08-83283-81	08-83283-85
Red	08-83283-82	08-83283-86
Green	08-83283-83	08-83283-87
Amber	08-83283-84	08-83283-88
Blue	08-83283-810	08-83283-811
Yellow	08-83283-814	08-83283-812
Orange	—	08-83283-816
Off-white	—	08-83283-817

Translucent colors: Add "TL" as suffix to Part Number.
*White if translucent color specified. ( ) Designates color selection.

Miniature, E.M.I. Supressed Watertight, Press-to-Test

08-83281 Type

Material and Finishes
Lens holder and front mounting nut is black anodized per MIL-A-8625A. Mounting tube & rear Mtg. nut, is bright nickel plated per QQ-N-200. Lockwasher is stainless steel. Terminals brass, gold plated per MIL-G-45204.
Cap Assembly
Lens is high impact-resistant plastic per L-P-349. Lens holders are aluminum, black anodized.
Lamp
T-1 ¾ midget flange base.
Mounting
Assembly mounts from rear of panel. All mounting hardware supplied. Flat on Mtg. tube provides for keyed installation.
Weight
Approx. .5 oz less lamp.

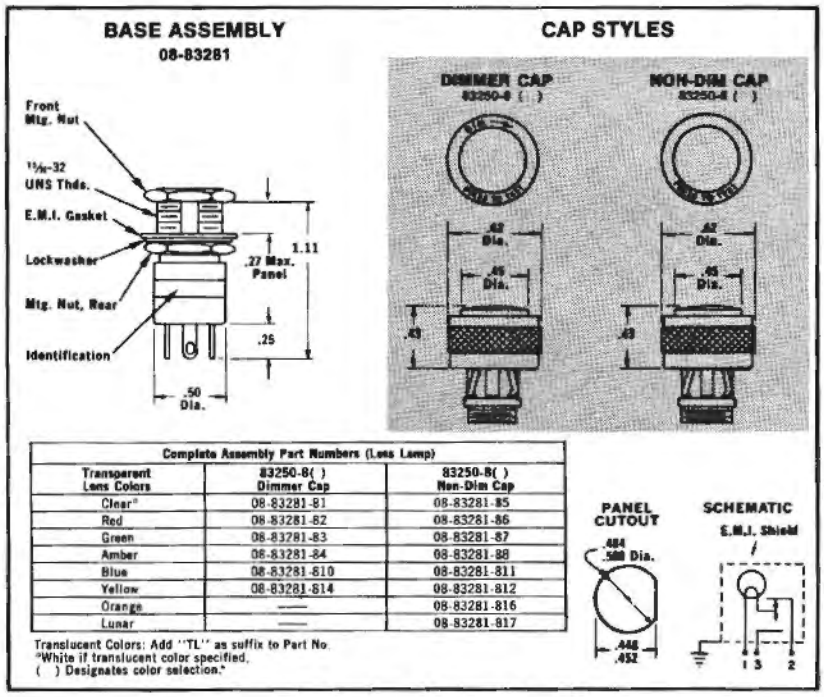

Complete Assembly Part Numbers (Less Lamp)

Transparent Lens Colors	83250-8( ) Dimmer Cap	83250-8( ) Non-Dim Cap
Clear*	08-83281-81	08-83281-85
Red	08-83281-82	08-83281-86
Green	08-83281-83	08-83281-87
Amber	08-83281-84	08-83281-88
Blue	08-83281-810	08-83281-811
Yellow	08-83281-814	08-83281-812
Orange	—	08-83281-816
Lunar	—	08-83281-817

Translucent Colors: Add "TL" as suffix to Part No.
*White if translucent color specified.
( ) Designates color selection.*

Optolite Indicators
Push-In

INDICATOR LIGHTS

ELECTROSWITCH
•ELECTRONIC PRODUCTS
UNIT OF ELECTRO SWITCH CORP.

Sub-Miniature "Little QT"

99-33080 Type
99-33081 Type

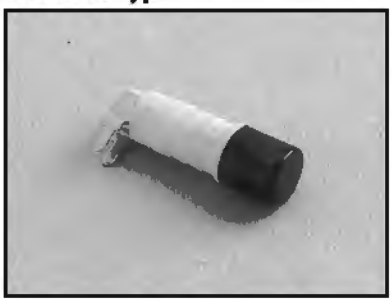

Material and Finishes
Housing and lamp base, gray glass filled nylon. Terminals, beryllium copper, gold flashed. Retainer clip, stainless steel.
Lens Cap
High impact-resistant plastic per L-P-393 (polycarbonate).
Lamp
T-1 wire terminal lamp; Lamp is replaced by removing snap-on cap.
Mounting
Press-in: Assembly press fits into .189 in. dia. hole. No mounting hardware required.
Retainer clip: For mounting assembly into .200 in. ± 005 in. dia. hole or panels less than .06 in. thick. Order clip 2-1186-643 separately.

Base Assembly 99-33080 | **Base Assembly** 99-33081 | **Base Assembly** 99-33087

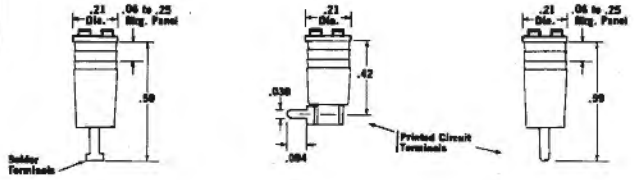

Cap Styles

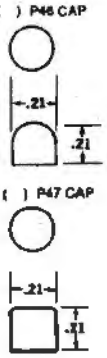

Printed Circuit Mounting Holes

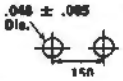

Schematic

Complete Assembly Part Numbers (Less Lamp)

Transparent Lens Colors	( )P46 Cap	( )P47 Cap
Clear*	99-33080- 5P46	99-33080- 5P47
Red	99-33080- 6P46	99-33080- 6P47
Green	99-33080- 7P46	99-33080- 7P47
Amber	99-33080- 8P46	99-33080- 8P47
Blue	99-33080-11P46	99-33080-11P47
Yellow	99-33080-12P46	99-33080-12P47
Orange	99-33080-16P46	99-33080-16P47
Off-white	99-33080-17P46	99-33080-17P47

Translucent colors: add "TL" as suffix to Part Number. * White if translucent color specified. ( ) Indicates color designation. For printed circuit terminals change 99-33080 to 99-33081. To order with lamp installed, add Lamp Number as suffix to Part Number. Example: 99-33080-5P46-001.

"Little QT" Lamps

Lamp Bases
Color coded for operating voltage as follows:

Blue	1.5 volts
Yellow	3.0 volts
Black	5.0 volts
Green	10.0 volts
Gray	120 volts
Purple	14.0 volts
White	18.0 volts
Red	28.0 volts AC

Lamp Drawing

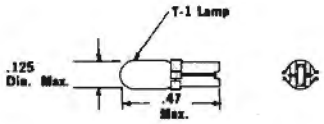

Little QT Lamp Selection

Lamp Number	Volts	Amps	MSCP	Average Life (Hrs.)	ANSI Number (Ref.)
003	1.5	.060	.02	50,000+	7202
004	1.5	.075	.03	16,000+	7203
005	3.0	.060	.03	100,000	7207
006	3.0	.120	.15	16,000	7208
007	3.0	.008	.01	16,000	7204
008	5.0	.015	.02	10,000	7209
009	5.0	.060	.05	100,000	683
010	5.0	.075	.09	25,000	713
012	5.0	.115	.20	5,000	7213
013	5.0	.060	.03	100,000	680
014	5.0	.115	.19	10,000	7215
015	5.0	.125	.25	5,000	7216
024	5.0	.115	.15	40,000	715
025	5.0	.060	.15	6,500	6150
016	10.0	.027	.10	10,000	7218
017	12.0	.060	.15	16,000+	7219
027	14.0	.040	.15	16,000	23
018	18.0	.026	.15	10,000	7220
022	28.0	.024	.15	16,000+	6838

Electroswitch Electronic Products • 2010 Yonkers Road • Raleigh, North Carolina
T 888-768-2797 • F 800-909-9171 • www.electro-nc.com

Cross Reference

INDICATOR LIGHTS

ELECTROSWITCH
•ELECTRONIC PRODUCTS
UNIT OF ELECTRO SWITCH CORP.

Cross Reference to Military Type Designations

Specification	Type Designation	Electroswitch Part Number
	LH 73/1	11-33480
MIL-L-3661/5	LH 73/2	18-36880
	LH 74/1	31-36180
	LH 74/2	31-36280
	LH 74/3	38-36180
MIL-3661/6	LH 74/4	38-36280
	LC 11 RN2	6P35
	LC 11 GN2	7P35
	LC 11 YN2	8P35
	LC 11 CN2	5P35
	LC 11 RT2	6P35TL
	LC 11 GT2	7P35TL
	LC 11 YT2	12P35TL
	LC 11 WT2	5P35TL
	LC 11 GD2	7P35IF
	LC 11 RD2	6P35IF
	LC 11 RB2	46P35
	LC 11 GB2	47P35
	LC 11 YB2	412P35
MIL-L-3661/11	LC 11 WB2	45P35
	LC 13 RN2	6P13
	LC 13 YN2	8P13
	LC 13 WT2	17P13
	LC 13 CN2	5P13
MIL-L-3661/13	LC 13 GT2	7P13TL
	LC 25 RN2	6P38
	LC 25 GN2	7P38
	LC 25 YN2	8P38
	LC 25 CN2	5P38
	LC 25 RT2	6P38TL
	LC 25 GT2	7P38TL
	LC 25 YT2	12P38TL
MIL-L-3661/25	LC 25 WT2	5P38TL
	LC 27 RN2	6P40
	LC 27 YN2	8P40
	LC 27 CN2	5P40
	LC 27 RT2	6P40TL
	LC 27 GT2	7P40TL
	LC 27 YT2	12P40TL
	LC 27 WT2	5P40TL
MIL-L-3661/27	LC 27 GN2	7P40
	LC 28 RN2	6P41
	LC 28 YN2	8P41
	LC 28 WT2	17P41
MIL-L-3661/28	LC 28 CN2	5P41
	LC 33 RN2	6P25
	LC 33 YN2	8P25
	LC 33 WT2	17P25
MIL-3661/33	LC 33 CN2	5P25
	LC 34 EN 2/DO2	80250-11
	LC 34 CN 2/DO2	80250-12
	LC 34 EN 2/EN2	80250-13
	LC 34 CN 2/EN2	80250-14
	LC 34 EN 2/SO2	80250-15
MIL-L-3661/34	LC 11 CN 2/SO2	80250-16
	LC 35 RN2	6P24
	LC 35 GN2	7P24
	LC 35 YN2	8P24
	LC 35 CN2	5P24
	LC 35 GT2	7P24TL
	LC 35 YT2	12P24TL
	LC 35 RT2	6P24TL
MIL-L-3661/35	LC 35 WT2	5P24TL
	LHC 82/1 WT2	99-36980-5TL
	LHC 82/1 RT2	99-36980-6TL
	LHC 82/1 GT2	99-36980-7TL
	LHC 82/1 YT2	99-36980-12TL
	LHC 82/2 YT2	99-36980-12TL
	LHC 82/2 WT2	99-36980-5TL
	LHC 82/2 RT2	99-36980-6TL
MIL-L-3661/40	LHC 82/2 GT2	99-36980-7TL
	LH 88/1	31-36680
MIL-L-3661/46	LH 88/2	31-36681
MIL-L-3661/47	LH 89/1	11-35182
MIL-L-3661/51	LH 92/1	91-80280

Cross Reference "MS" Numbers

Military Standard	Electroswitch Part Number
MS 25041-1	01-91180-1
MS 25041-2	01-91180-2
MS 25041-3	01-91180-3
MS 25041-4	01-91180-4
MS 25041-5	01-91180-5
MS 25041-6	01-91180-6
MS 25041-7	01-91180-7
MS 25041-8	01-91180-8
MS 25041-10	01-91180-10
MS 25041-11	01-91180-11
MS 25256-2	11-33480-8P12
MS 25256-4	11-33480-7P12
MS 25256-6	11-33480-6P12
MS 25256-8	11-33480-5P12
MS 25256-10	11-33480-5P12TL
MS 25256-12	11-33480-11P12
MS 25331-1	02-91180-1
MS 25331-2	02-91180-2
MS 25331-3	02-91180-3
MS 25331-4	02-91180-4
MS 25331-5	02-91180-5
MS 25331-6	02-91180-6
MS 25331-7	02-91180-7
MS 25331-8	02-91180-8
MS 25331-9	02-91180-9

Lamp Selection Guide

INDICATOR LIGHTS

ELECTROSWITCH
•ELECTRONIC PRODUCTS
UNIT OF ELECTRO SWITCH CORP.

INCANDESCENT TYPE

	LAMP NO.	RATED VOLTAGE	AMPERAGE	APPROX. CANDLEPOWER	AVERAGE LIFE (Hrs.)	NOTES
Size T-1 Sub-midget Flange Base	682	5.0	.060	.03	100,000	MS24515-682
	685	5.0	.060	.05	100,000	MS24515-685
	718	5.0	.115	.15	40,000	MS24515-718
Group M	6839	28.0	.024	.13	16,000	MS3338-6839
Size T-1¾ Midget Flange Base	331	1.35	.06	.01	500	
	268	2.5	.35	.21	10,000	
	338	2.7	.06	.04	6,000	MS25237-338
	345	6.0	.04	.03	10,000	
	328	6.0	.20	.34 @ 5 V	1,000	MS25237-328
	380	6.3	.04	.02	50,000	
	350	6.3	.15	.45	3,000	
	349	6.3	.20	.55	3,000	
	381	6.3	.20	.40	50,000	
Group A	344	10.0	.014	.004	10,000	
	367X	10.0	.04	.08	5,000	
	330	14.0	.08	.50	750	MS25237-330
	370	18.0	.04	.15	1,000	
	327	28.0	.04	.34	1,000	MS25237-327
	387	28.0	.04	.30	25,000	MS25237-387
Size T-3¼ Miniature Bayonet Base Single Contact	316	6.0	.70	3.4	500	MS25231-316
	44	6.3	.25	.9	3,000	
	47	6.3	.15	.52	3,000	
	1816	13.0	.33	3.0	1,000	
	1815	14.0	.20	1.4	3,000	
	313	28.0	.17	3.0	500	MS25231-313
	1819	28.0	.04	.34	1,000	MS25231-1819
	1829	28.0	.075	1.0	1,000	MS25231-1829
Group B	1835	55.0	.05	1.1	10,000	

NEON GLOW TYPE

	LAMP NO.	RATED VOLTAGE	STARTING VOLTAGE	RECOMMENDED SERIES RESISTOR	NOTES
Size T-2	A1G	105-125 AC OR DC	65 VAC 95 VDC	68KΩ	
Group C	A1H (High Brightness)	105-120 VAC 150 VDC	95 VAC	27KΩ	
Size T-2	C7A	105-125 AC OR DC	65 VAC 90 VDC	68KΩ	MS25252-C7A
Group D	C9A (High Brightness)	105-125 AC OR DC	105 VAC	27KΩ	MS25252-C9A

LAMPS WITH BUILT-IN RESISTOR

	LAMP NO.	RATED VOLTAGE	STARTING VOLTAGE	NOTES
Size T-2	A1HR1	105-125 VAC	65 VAC 95 VDC	
	A1GR1	105-125 VAC	95 VAC	
	A1GR2	105-125 VAC	130 VAC	

Notes:
1. Candlepower values indicated are approximate initial mean spherical candlepower at rated voltage.
2. Service conditions such as voltage surges, temperature, shock, and vibration may contribute to a shorter average life.

Electroswitch Electronic Products • 2010 Yonkers Road • Raleigh, North Carolina
T 888-768-2797 • F 800-909-9171 • www.electro-nc.com

Sensitive Snap-Action Pushbutton Switches — Solder and P.C. Terminals (Momentary Action)

PS SERIES | 5 AMP. (S.P.) 1 AMP (D.P.) 0.4 VA

DIRECT PANEL MOUNT

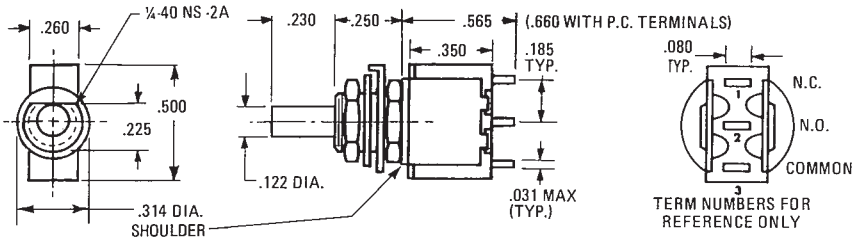

ONE POLE

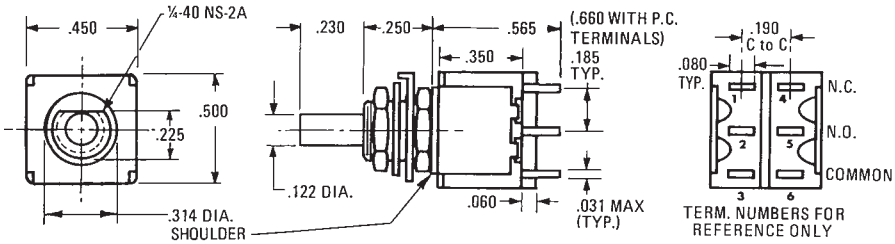

TWO POLE

Basic P/N	Terminal Type	Poles	Cap Size	Cap Color	Contact Material-Type
PS	1 - Solder lug 2 - Printed Circuit Terminals	1 - One ❶ 2 - Two ❶	0 - No Cap 1 - .200 Dia. 2 - .375 Dia. 3 - .450 Sq. 4 - .310 Dia. 5 - .780 Sq. ❸	0 - No Cap 1 - Black 2 - White 3 - Ted	B - Gold/Nickel/Brass ❷ G - Gold/Nickel/Silver ❶ ❷ Q - Coin Silver ❶

❶ Single pole circuit rated 5 amps, double pole circuit rated 1 amp.
❷ Ratings are 0.4 VA — 28 BAC or DC
❸ Supplied with .90" square black bezel as Standard

EXAMPLES:
PS1-100Q = One-pole, S.L., 5 amp., No Cap, Coin Silver Contacts
PS2-221B = Two-pole, PC, .4 VA, .375 Dia., Black Cap., Gold/Nickel/Brass Contacts

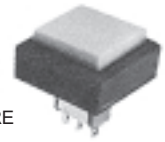

NEW .780" SQUARE CAP AND BEZEL

W-NU-29A

W-NU-30A

DECORATIVE FACE NUTS (SEE NOTE UNDER MATERIALS)

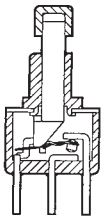

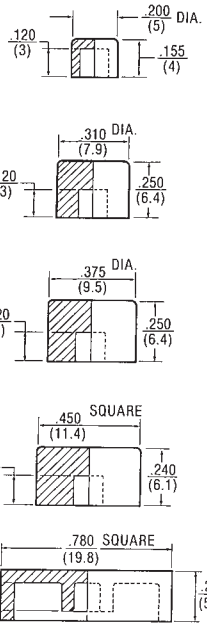

Description	P/N	Color
Small Cap .200	W-KN-16	Black
	W-KN-16A	White
	W-KN-16B	Red
Medium Cap .310	W-KN-32	Black
	W-KN-32A	White
	W-KN-32B	Red
Large Cap .375	W-KN-17	Black
	W-KN-17A	White
	W-KN-17B	Red
Square Cap .450	W-KN-18	Black
	W-KN-18A	White
	W-KN-18B	Red
.780 Square Cap	W-KN-52	Black
	W-KN-52A	White
	W-KN-52B	Red
.90 Square Bezel	Bezel W-BZ-21	Black

SPECIFICATIONS

Contact Rating – Letter codes G and Q (1 Pole) 5 amp resistive @ 125 VAC (U.L. recognized, CSA certified) or 5 amp resistive @ 28 VDC. (2 pole) 1 amp resistive @ 125 VAC (U.L. recognized, CSA certified) or 1 amp resistive @ 28 VDC.
Letter codes B and G – (1 and 2 Poles) 0.4 Volt-amps (VA) maximum @ 28 V max. (AC or DC).
Contact Resistance – 50 milliohms maximum.
Insulation Resistance – 1,000 megohms minimum.
Dielectric Strength – 1,000 volts RMS minimum at sea level.
Electrical Life – 60,000 cycles minimum at full load-resistive.
Maximum Allowable Installation Force on Plunger – 10 pounds.
Multi-pole contacts do not make and break simultaneously.

MATERIALS

Case — Diallyl Phthalate.
Bushing — Brass, nickel plated.
Housing — Stainless steel.
Plunger — Thermoplastic.
Common Contact — Refer to contact material table above.
Center & End Contact — Refer to contact material table above.
Hardware — (2) Hex nuts W-NU-11, brass nickel plated. (1) Internal tooth lockwasher W-WA-16, steel chromium plated. (1) Locking Ring W-RI-16, C.R.S. nickel plated.
Decorative Face Nuts — Brass, bright chrome plated. See Page 16 for complete dimensions.

Solder Lug Terminal

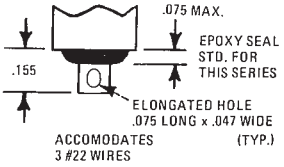

Printed Circuit Terminal

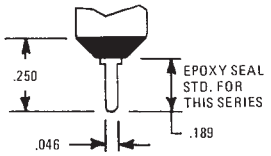

PS SERIES | 5 AMP. (S.P.) 0.4VA

Sensitive Snap-Action Pushbutton Switches — P.C. Terminals (Momentary Action)

RIGHT ANGLE MOUNT IN P.C. BOARDS (HORIZONTAL)

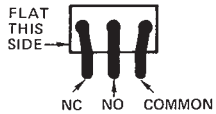

PS5
VIEW A-A

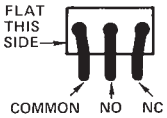

PS6
VIEW A-A

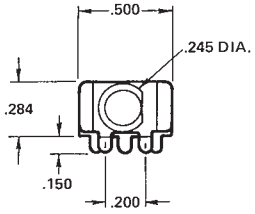

TOP

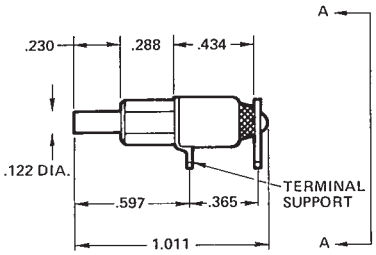

SIDE

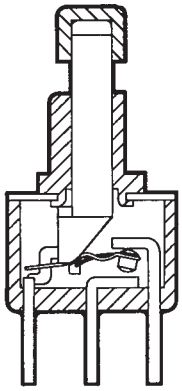

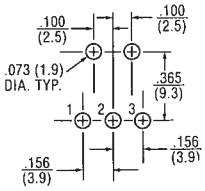

Mounting Information

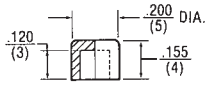

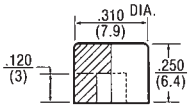

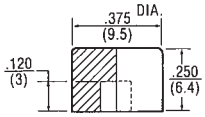

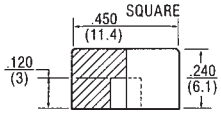

Basic P/N	Terminal Type	Poles	Cap Size	Cap Color	Contact Material-Type
PS	5 - Rt. Angle P.C. Mount 6 - Rt. Angle P.C. Mount	1 - One	0 - No Cap 1 - .200 Dia. 2 - .375 Dia. 3 - .450 Sq. 4 - .310 Dia.	0 - No Cap 1 - Black 2 - White 3 - Red	B - Gold/Nickel/Brass ❷ G - Gold/Nickel/Silver ❶❷ Q - Coin Silver ❷

❶ Rating is 5 amps — 125 VAC or 28 VDC.
❷ Ratings are 0.4 VA — 28 VAC or DC.

ORDERING EXAMPLES:

PS5-100G = (Rt. Angle P.C. mount 5 amp.) One-pole No Cap No Color Gold/Nickel/Silver Contacts

P S 5 - 1 0 0 G

PS6-121Q = (Rt. Angle P.C. mount 5 amp.) One-pole .375 Dia. Black Cap Coin Silver Contacts

P S 6 - 1 2 1 Q

Description	P/N	Color
Small Cap .200	W-KN-16	Black
	W-KN-16A	White
	W-KN-16B	Red
Medium Cap .310	W-KN-32	Black
	W-KN-32A	White
	W-KN-32B	Red
Large Cap .375	W-KN-17	Black
	W-KN-17A	White
	W-KN-17B	Red
Square Cap .450	W-KN-18	Black
	W-KN-18A	White
	W-KN-18B	Red

SPECIFICATIONS

Contact Rating — Letter codes G and Q — 5 amp resistive @ 125 VAC or 28 VDC.
Letter codes B and G — 0.4 volts-amps (VA) maximum @ 28 VAC or DC.

Contact Resistance — 50 milliohms maximum.

Insulation Resistance — 1,000 megohms minimum.

Dielectric Strength — 1,000 volts RMS minimum at sea level.

Electrical Life — 60,000 cycles minimum at full load.

Maximum Allowable Installation Force on Plunger — 10 pounds.

MATERIALS

Case — Diallyl Phthalate.

Bushing — Brass, nickel plated.

Housing — Stainless steel.

Plunger — Thermoplastic.

Common Contact — Refer to contact material table above.

Center & End Contact — Refer to contact material table above.

Sensitive Snap-Action Pushbutton Switches — P.C. Terminals (Momentary Action)

PS SERIES — 5 AMP. (S.P.) 1 AMP. (D.P.) 0.4VA

RIGHT ANGLE P.C. MOUNT SWITCHES

Basic P/N	Terminal Type	Poles	Cap Size	Cap Color	Contact Material-Type
PS	9 - Horizontal Right Angle 10 - Vertical Right Angle (.100 Terminal Spacing) 11 - Vertical Right Angle 0.4 VA (.150 Terminal Spacing)	1 - One ❶ 2 - Two ❶	0 - No Cap 1 - .200 Dia. 2 - .375 Dia. 3 - .450 Sq. 4 - .310 Dia.	0 - No Cap 1 - Black 2 - White 3 - Red	B - Gold/Nickel/Brass ❷ G - Gold/Nickel/Silver ❶ ❷ Q - Coin Silver ❶

❶ Single pole circuit rated 5 amps, double pole circuit rated 1 amp.
❷ Ratings are 0.4 VA — 28 VAC or DC.

ORDERING EXAMPLES:

PS9-100B =	(PC mounted 0.4 VA)	One-pole	No Cap	No Color	Gold/Nickel/ Brass Contacts
	P S 9 -	1	0	0	B
PS10-221Q=	(PC mounted 1 amp.)	Two-pole	.375 Dia.	Black Cap	Coin Silver Contacts
	P S 10 -	2	2	1	Q

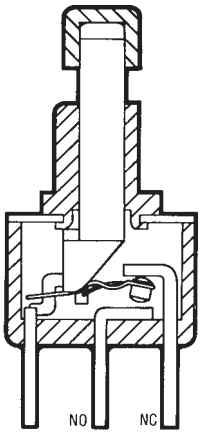

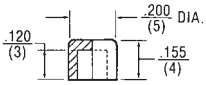

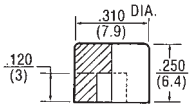

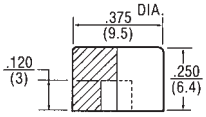

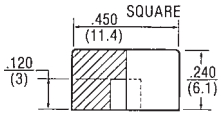

Description	P/N	Color
Small Cap .200	W-KN-16	Black
	W-KN-16A	White
	W-KN-16B	Red
Medium Cap .310	W-KN-32	Black
	W-KN-32A	White
	W-KN-32B	Red
Large Cap .375	W-KN-17	Black
	W-KN-17A	White
	W-KN-17B	Red
Square Cap .450	W-KN-18	Black
	W-KN-18A	White
	W-KN-18B	Red

SPECIFICATIONS

Contact Rating — Letter codes G and Q (1 Pole) 5 amp resistive @ 125 VAC (U.L. recognized, CSA certified) or 5 amp resistive @ 28 VDC. (2 pole) 1 amp resistive @ 125 VAC (U.L. recognized, CSA certified) or 1 amp resistive @ 28 VDC.
Letter codes B and G — (1 and 2 Poles) 0.4 Volt-amps (VA) maximum @ 28 V maximum (AC or DC).
Contact Resistance — 50 milliohms maximum.
Insulation Resistance — 1,000 megohms minimum.
Dielectric Strength — 1,000 volts RMS minimum at sea level.
Electrical Life — 60,000 cycles minimum at full load-resistive.
Maximum Allowable Installation Force on Plunger — 10 pounds.
Multi-pole contacts do not make and break simultaneously.

MATERIALS

Case — Diallyl Phthalate.

Bushing — Brass, nickel plated.

Housing — Stainless steel.

Plunger — Thermoplastic.

Common Contact — Refer to contact material table above.

Center & End Contact — Refer to contact material table above.

Right Angle P.C. Terminal

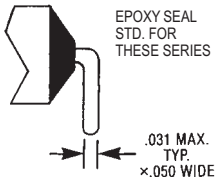

Sensitive Snap-Action Pushbutton Switches — P.C. Terminals (Momentary Action)

PS SERIES | 5 AMP. (S.P.) 1 AMP. (D.P.) 0.4VA

RIGHT ANGLE P.C. MOUNT SWITCHES

PS 9

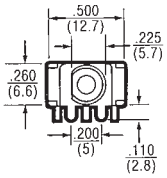

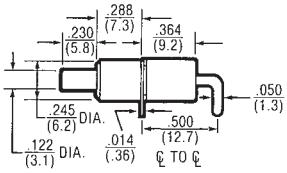

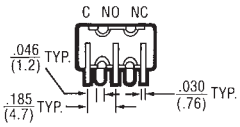

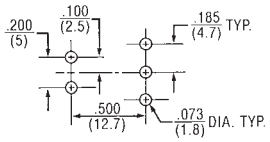

1 Pole P.C. Mounting

ONE POLE

EPOXY SEALED P.C. TERMINALS ARE SUPPLIED AS STANDARD FOR THESE OPTIONS.

PS 9

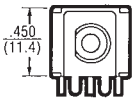

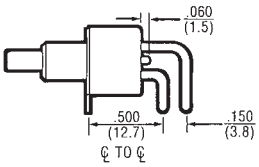

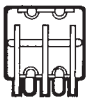

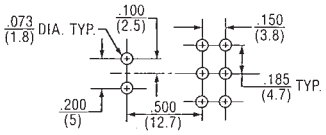

2 Pole P.C. Mounting

TWO POLE

EPOXY SEALED P.C. TERMINALS ARE SUPPLIED AS STANDARD FOR THESE OPTIONS.

PS 10

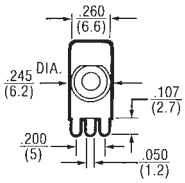

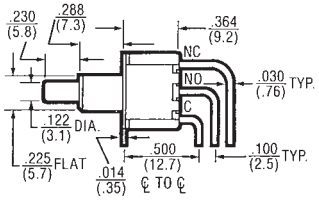

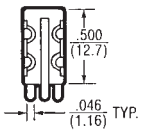

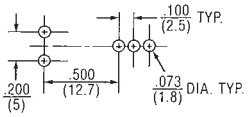

1 Pole P.C. Mounting

ONE POLE

EPOXY SEALED P.C. TERMINALS ARE SUPPLIED AS STANDARD FOR THESE OPTIONS.

PS 10

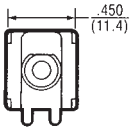

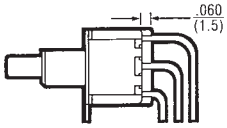

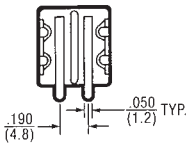

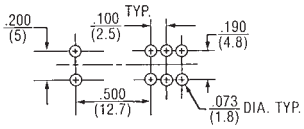

2 Pole P.C. Mounting

TWO POLE

EPOXY SEALED P.C. TERMINALS ARE SUPPLIED AS STANDARD FOR THESE OPTIONS.

PS 11

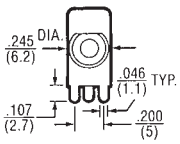

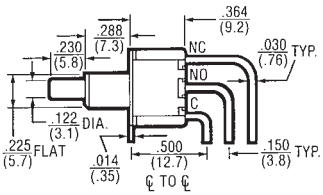

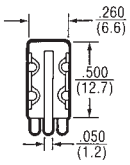

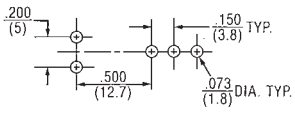

1 Pole P.C. Mounting

ONE POLE

EPOXY SEALED P.C. TERMINALS ARE SUPPLIED AS STANDARD FOR THESE OPTIONS.

PS 11

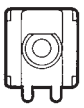

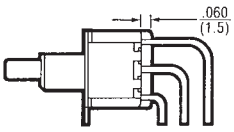

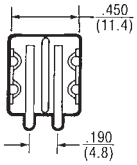

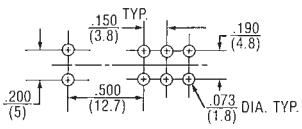

2 Pole P.C. Mounting

TWO POLE

EPOXY SEALED P.C. TERMINALS ARE SUPPLIED AS STANDARD FOR THESE OPTIONS.

Sensitive Snap-Action Pushbutton Switches — P.C. Terminals (Momentary Action)

PS SERIES | 5 AMP. (S.P.) 1 AMP. (D.P.) 0.4 VA

VERTICAL P.C. MOUNT (.460 x .620 BRACKET)

PS7 (LONG BUSHING)

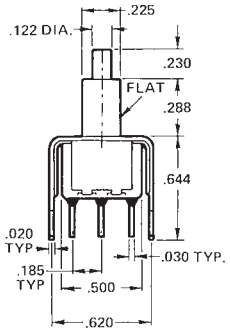

SP

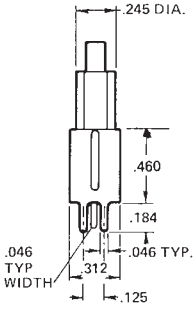

DP

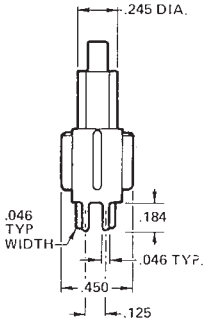

PS8 (SHORT BUSHING)

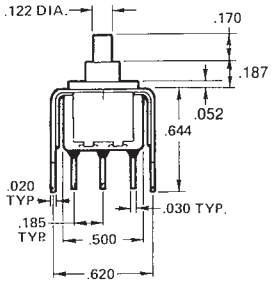

SP

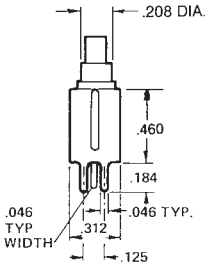

DP

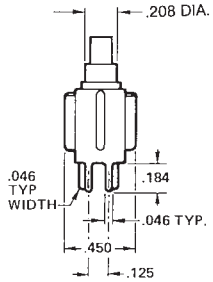

Basic P/N	Terminal Type	Poles	Cap Size	Cap Color	Contact Material-Type
PS	7 - PC Mounted 8 - PC Mounted	1 - One ❶ 2 - Two ❶	0 - No Cap 1 - .200 Dia. 2 - .375 Dia. 3 - .450 Sq. 4 - .310 Dia.	0 - No Cap 1 - Black 2 - White	B - Gold/Nickel/Brass ❷ G - Gold/Nickel/Silver ❶❷ Q - Coin Silver ❶

❶ Single pole circuit rated 5 amps, double pole circuit rated 1 amp.
❷ Ratings are 0.4 VA — 28 VAC or DC.

ORDERING EXAMPLES:

PS7-100G = (PC mounted 5 amp.) One-pole No Cap No Color Gold/Nickel/Silver Contacts

P S 7 - 1 0 0 G

PS8-221B = (PC mounted 0.4 VA) Two-pole .375 Dia. Black Cap Gold/Nickel/Brass Contacts

P S 8 - 2 2 1 B

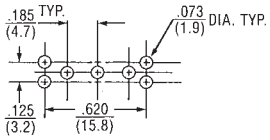

1 Pole P.C. Mounting

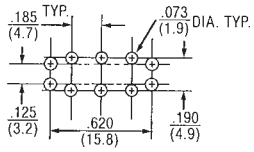

2 Pole P.C. Mounting

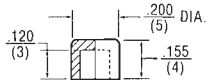

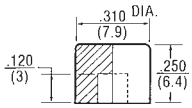

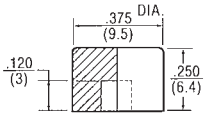

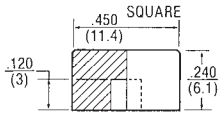

Description	P/N	Color
Small Cap .200	W-KN-16	Black
	W-KN-16A	White
	W-KN-16B	Red
Medium Cap .310	W-KN-32	Black
	W-KN-32A	White
	W-KN-32B	Red
Large Cap .375	W-KN-17	Black
	W-KN-17A	White
	W-KN-17B	Red
Square Cap .450	W-KN-18	Black
	W-KN-18A	White
	W-KN-18B	Red

SPECIFICATIONS

Contact Rating – Letter codes G and Q (1 Pole) 5 amp resistive @ 125 VAC (U.L. recognized, CSA certified) or 5 amp resistive @ 28 VDC. (2 pole) 1 amp resistive @ 125 VAC (U.L. recognized, CSA certified) or 1 amp resistive @ 28 VDC.
Letter codes B and G – (1 and 2 Poles) 0.4 Volt-amps (VA) maximum @ 28 V maximum (AC or DC).
Contact Resistance – 50 milliohms maximum.
Insulation Resistance – 1,000 megohms minimum.
Dielectric Strength – 1,000 volts RMS minimum at sea level.
Electrical Life – 60,000 cycles minimum at full load-resistive.
Maximum Allowable Installation Force on Plunger – 10 pounds.
Multi-pole contacts do not make and break simultaneously.

MATERIALS

Case — Diallyl Phthalate.
Bushing — Brass, nickel plated.
Housing — Stainless steel.
Plunger — Thermoplastic.
Common Contact — Refer to contact material table above.
Center & End Contact — Refer to contact material table above.

Printed Circuit Terminal

Sensitive Snap-Action Pushbutton Switches — P.C. Terminals (Momentary Action)

PS SERIES | 5 AMP. (S.P.) 1 AMP (D.P.) 0.4 VA

VERTICAL P.C. MOUNT (.630 x .620 BRACKET)

PS71 (LONG BUSHING)

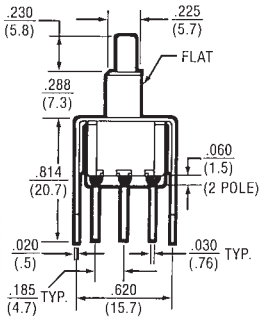

SP

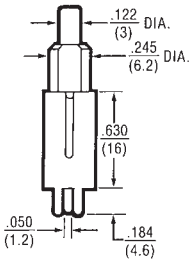

DP

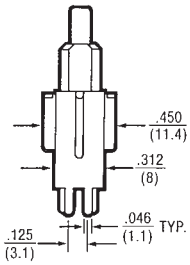

PS81 (SHORT BUSHING)

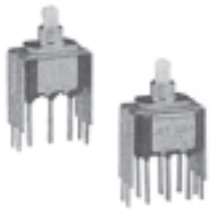

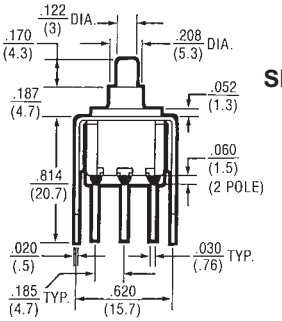

SP

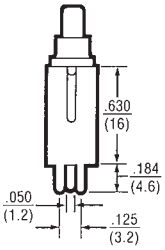

DP

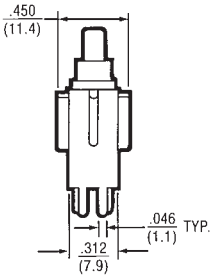

Basic P/N	Terminal Type	Poles	Cap Size	Cap Color	Contact Material-Type
PS	71 - PC Mounted 81 - PC Mounted	1 - One ❶ 2 - Two ❶	0 - No Cap 1 - .200 Dia. 2 - .375 Dia. 3 - .450 Sq. 4 - .310 Dia.	0 - No Cap 1 - Black 2 - White 3 - Red	B - Gold/Nickel/Brass ❷ G - Gold/Nickel/Silver ❶❷ Q - Coin Silver ❶

❶ Single pole circuit rated 5 amps, double pole circuit rated 1 amp.
❷ Ratings are 0.4 VA — 28 VAC or DC.

ORDERING EXAMPLES:

PS71-100B=	(PC mounted 0.4 VA)	One-pole	No Cap	No Color	Gold/Nickel/ Brass Contacts
	P S 71 -	1	0	0	B
PS81-221Q=	(PC mounted 1 amp.)	Two-pole	.375 Dia.	Black Cap	Coin Silver Contacts
	P S 81 -	2	2	1	Q

SPECIFICATIONS

Contact Rating – Letter codes G and Q (1 Pole) 5 amp resistive @ 125 VAC (U.L. recognized, CSA certified) or 5 amp resistive @ 28 VDC. (2 pole) 1 amp resistive @ 125 VAC (U.L. recognized, CSA certified) or 1 amp resistive @ 28 VDC.
Letter codes B and G – (1 and 2 Poles) 0.4 Volt-amps (VA) maximum @ 28 V maximum (AC or DC).
Contact Resistance – 50 milliohms maximum.
Insulation Resistance – 1,000 megohms minimum.
Dielectric Strength – 1,000 volts RMS minimum at sea level.
Electrical Life – 60,000 cycles minimum at full load-resistive.
Maximum Allowable Installation Force on Plunger – 10 pounds.
Multi-pole contacts do not make and break simultaneously.

MATERIALS

Case — Diallyl Phthalate.
Bushing — Brass, nickel plated.
Housing — Stainless steel.
Plunger — Thermoplastic.
Common Contact — Refer to contact material table above.
Center & End Contact — Refer to contact material table above.

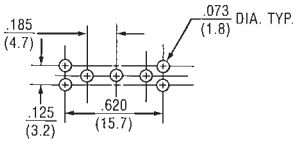

1 Pole P.C. Mounting

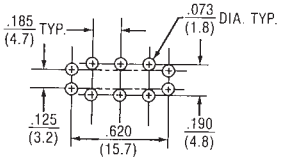

2 Pole P.C. Mounting

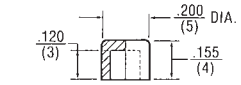

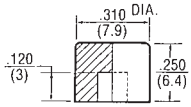

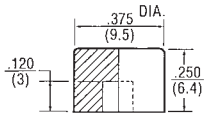

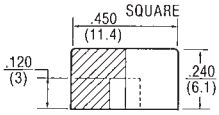

Description	P/N	Color
Small Cap .200	W-KN-16	Black
	W-KN-16A	White
	W-KN-16B	Red
Medium Cap .310	W-KN-32	Black
	W-KN-32A	White
	W-KN-32B	Red
Large Cap .375	W-KN-17	Black
	W-KN-17A	White
	W-KN-17B	Red
Square Cap .450	W-KN-18	Black
	W-KN-18A	White
	W-KN-18B	Red

Printed Circuit Terminal

Sensitive Snap-Action Pushbutton Switches — P.C. Terminals (Momentary Action)

PS SERIES — 5 AMP. (S.P.) 1 AMP. (D.P.) 0.4 VA

VERTICAL P.C. MOUNT (.460 x .750 BRACKET)

PS72 (LONG BUSHING)

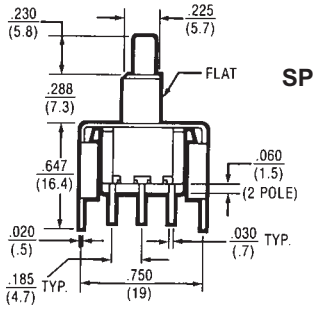

SP

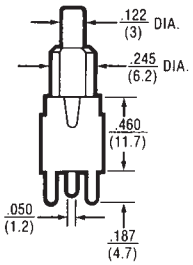

DP

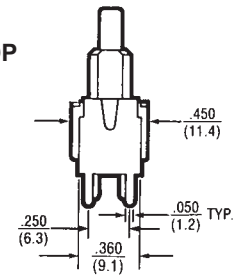

PS82 (SHORT BUSHING)

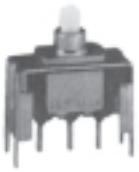

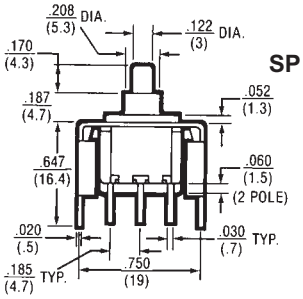

SP

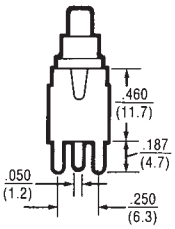

DP

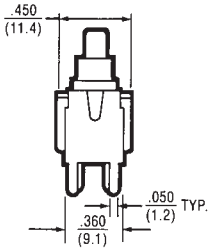

Basic P/N	Terminal Type	Poles	Cap Size	Cap Color	Contact Material-Type
PS	72 - PC Mounted 82 - PC Mounted	1 - One ❶ 2 - Two ❶	0 - No Cap 1 - .200 Dia. 2 - .375 Dia. 3 - .450 Sq. 4 - .310 Dia.	0 - No Cap 1 - Black 2 - White 3 - Red	B - Gold/Nickel/Brass ❷ G - Gold/Nickel/Silver ❶❷ Q - Coin Silver ❶

❶ Single pole circuit rated 5 amps, double pole circuit rated 1 amp.
❷ Ratings are 0.4 VA — 28 VAC or DC.

ORDERING EXAMPLES:

PS72-100Q= (PC mounted 5 amp.) One-pole No Cap No Color Coin Silver Contacts

P S 72 - 1 0 0 Q

PS82-221B= (PC mounted 0.4 VA) Two-pole .375 Dia. Black Cap Gold/Nickel/ Brass Contacts

P S 82 - 2 2 1 B

SPECIFICATIONS

Contact Rating – Letter codes G and Q (1 Pole) 5 amp resistive @ 125 VAC (U.L. recognized, CSA certified) or 5 amp resistive @ 28 VDC. (2 pole) 1 amp resistive @ 125 VAC (U.L. recognized, CSA certified) or 1 amp resistive @ 28 VDC.
Letter codes B and G – (1 and 2 Poles) 0.4 Volt-amps (VA) maximum @ 28 V maximum (AC or DC).
Contact Resistance – 50 milliohms maximum.
Insulation Resistance – 1,000 megohms minimum.
Dielectric Strength – 1,000 volts RMS minimum at sea level.
Electrical Life – 60,000 cycles minimum at full load-resistive.
Maximum Allowable Installation Force on Plunger – 10 pounds.
Multi-pole contacts do not make and break simultaneously.

MATERIALS

Case — Diallyl Phthalate.
Bushing — Brass, nickel plated.
Housing — Stainless steel.
Plunger — Thermoplastic.
Common Contact — Refer to contact material table above.
Center & End Contact — Refer to contact material table above.

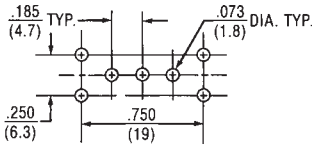

1 Pole P.C. Mounting

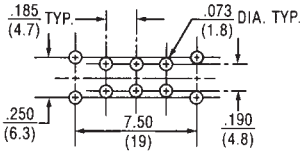

2 Pole P.C. Mounting

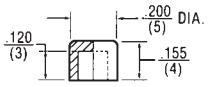

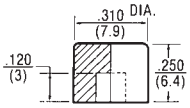

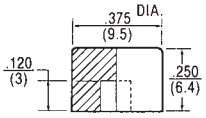

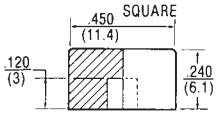

Description	P/N	Color
Small Cap .200	W-KN-16	Black
	W-KN-16A	White
	W-KN-16B	Red
Medium Cap .310	W-KN-32	Black
	W-KN-32A	White
	W-KN-32B	Red
Large Cap .375	W-KN-17	Black
	W-KN-17A	White
	W-KN-17B	Red
Square Cap .450	W-KN-18	Black
	W-KN-18A	White
	W-KN-18B	Red

Printed Circuit Terminal

Sensitive Snap-Action Pushbutton Switches — P.C. Terminals (Momentary Action)

PS SERIES | 5 AMP. (S.P.) 1 AMP (D.P.) 0.4 VA

VERTICAL P.C. MOUNT (.630 x .750 BRACKET)

PS73 (LONG BUSHING)

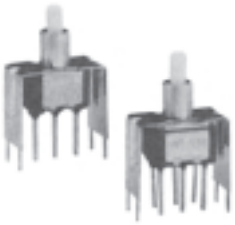

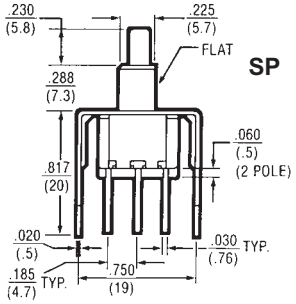

SP

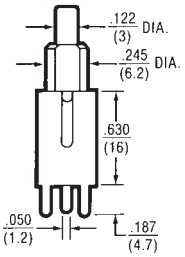

DP

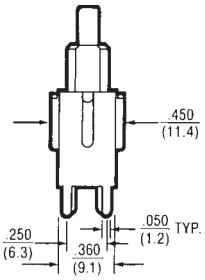

PS83 (SHORT BUSHING)

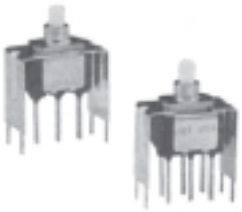

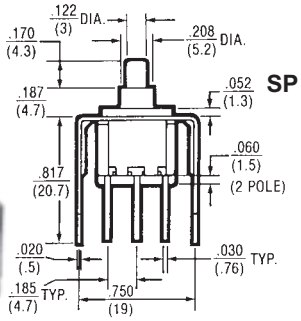

SP

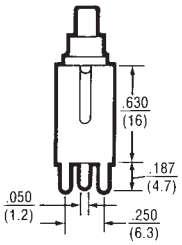

DP

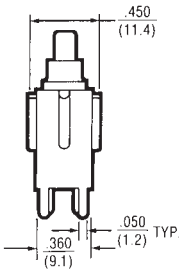

Basic P/N	Terminal Type	Poles	Cap Size	Cap Color	Contact Material-Type
PS	73 - PC Mounted 83 - PC Mounted	1 - One 2 - Two	0 - No Cap 1 - .200 Dia. 2 - .375 Dia. 3 - .450 Sq. 4 - .310 Dia.	0 - No Cap 1 - Black 2 - White 3 - Red	B - Gold/Nickel/Brass ❷ G - Gold/Nickel/Silver ❶❷ Q - Coin Silver ❷

❶ Single pole circuit rated 5 amps, double pole circuit rated 1 amp.
❷ Ratings are 0.4 VA — 28 VAC or DC.

ORDERING EXAMPLES:

PS73-100G= (PC mounted 5 amp.) One-pole No Cap No Color Gold/Nickel/Silver Contacts

P S 73 - 1 0 0 G

PS83-221B= (PC mounted 0.4 VA) Two-pole .375 Dia. Black Cap Gold/Nickel/Brass Contacts

P S 83 - 2 2 1 B

SPECIFICATIONS

Contact Rating – Letter codes G and Q (1 Pole) 5 amp resistive @ 125 VAC (U.L. recognized, CSA certified) or 5 amp resistive @ 28 VDC. (2 pole) 1 amp resistive @ 125 VAC (U.L. recognized, CSA certified) or 1 amp resistive @ 28 VDC.
Letter codes B and G – (1 and 2 Poles) 0.4 Volt-amps (VA) maximum @ 28 V maximum (AC or DC).
Contact Resistance – 50 milliohms maximum.
Insulation Resistance – 1,000 megohms minimum.
Dielectric Strength – 1,000 volts RMS minimum at sea level.
Electrical Life – 60,000 cycles minimum at full load-resistive.
Maximum Allowable Installation Force on Plunger – 10 pounds.
Multi-pole contacts do not make and break simultaneously.

MATERIALS

Case — Diallyl Phthalate.
Bushing — Brass, nickel plated.
Housing — Stainless steel.
Plunger — Thermoplastic.
Common Contact — Refer to contact material table above.
Center & End Contact — Refer to contact material table above.

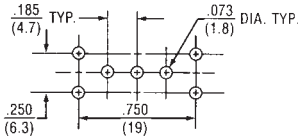

1 Pole P.C. Mounting

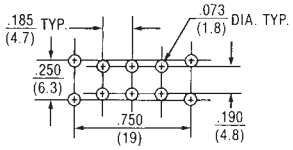

2 Pole P.C. Mounting

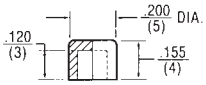

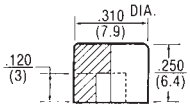

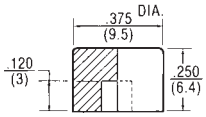

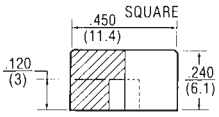

Description	P/N	Color
Small Cap .200	W-KN-16	Black
	W-KN-16A	White
	W-KN-16B	Red
Medium Cap .310	W-KN-32	Black
	W-KN-32A	White
	W-KN-32B	Red
Large Cap .375	W-KN-17	Black
	W-KN-17A	White
	W-KN-17B	Red
Square Cap .450	W-KN-18	Black
	W-KN-18A	White
	W-KN-18B	Red

Printed Circuit Terminal

EPOXY SEAL STD. FOR THIS SERIES

Sensitive Snap-Action Pushbutton Switches — Solder and P.C. Terminals (Momentary Action)

PS SERIES | 5 AMP. (S.P.) 1 AMP (D.P.) 0.4 VA

SNAP-IN MOUNT

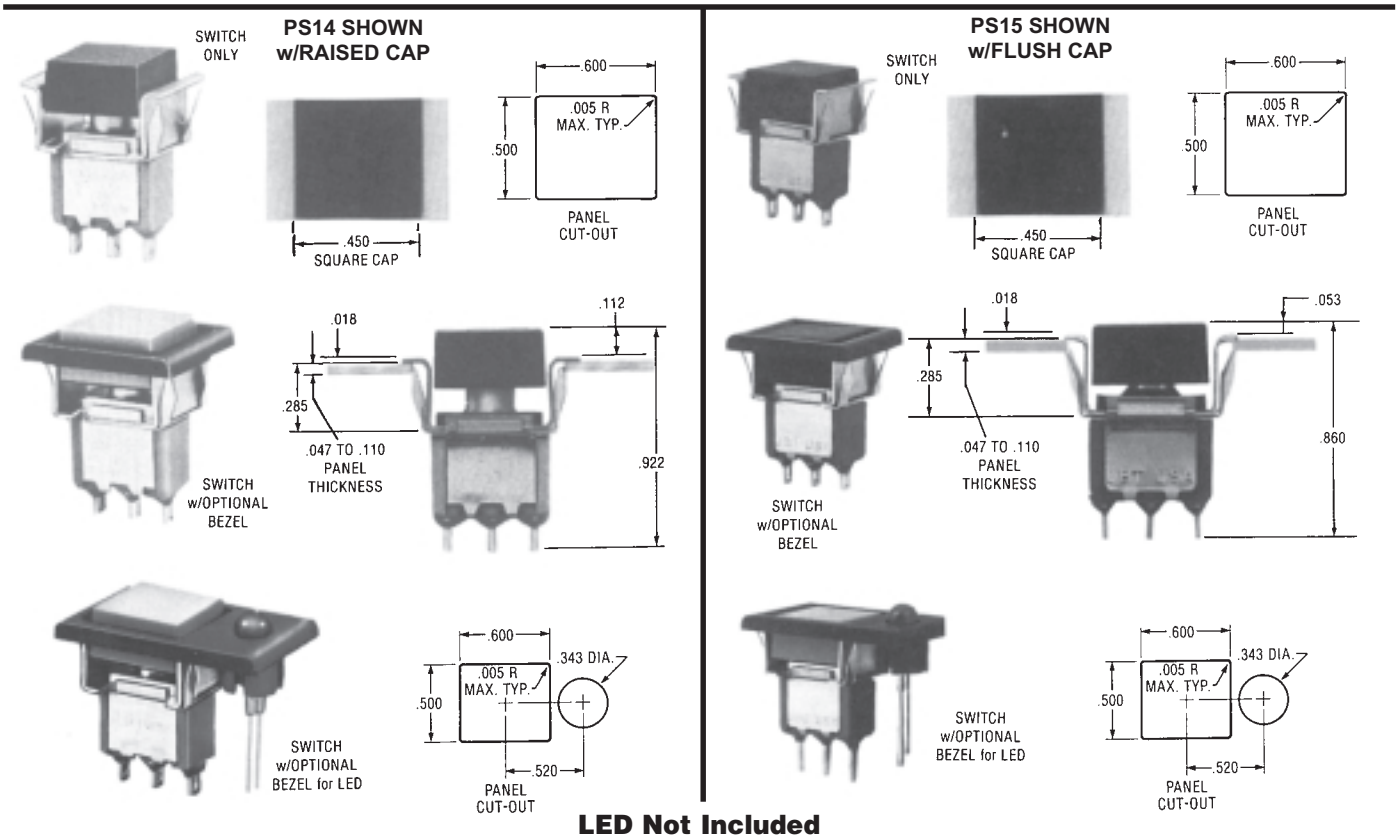

LED Not Included

Basic P/N	Cap Configuration Terminal-Rating	Poles	Cap Size	Cap Color	Optional Features: Bezel Color & Type	Optional Features: Contact Material-Type
PS	14 - Raised Cap Solder Lug 15 - Flush Cap ❸ Solder Lug 16 - Raised Cap PC Terminals 17 - Flush Cap ❸ PC Terminals	1 - One ❶ 2 - Two ❶	0 - No Cap 1 - .450 Sq.	0 - No Cap 1 - White 2 - Black 3 - Red	1 - White 2 - Black 3 - Red 4 - Black or LED	B - Gold/Nickel/Brass ❷ G - Gold/Nickel/Silver ❶ ❷ Q - Coin Silver ❶

❶ Single pole circuit rated 5 amps, double pole circuit rated 1 amp. ❷ Ratings are 0.4 VA — 28 BAC or DC. ❸ Flush cap is flush to bezel, not to mounting bracket.

EXAMPLES:
PS14-100Q = Raised Cap, Solder Lug Terminals, 5 Amp, Single Pole, No Cap, Coin Silver Contacts
PS14-1134B = Raised Cap, Solder Lug Terminals, 0.4 VA Rating, Single Pole, .450 Square Red Cap, Black Bezel for LED, Gold/Brass Contact Material

SPECIFICATIONS

Contact Rating – Letter codes G and Q (1 Pole) 5 amp resistive @ 125 VAC (U.L. recognized, CSA certified) or 5 amp resistive @ 28 VDC. (2 pole) 1 amp resistive @ 125 VAC (U.L. recognized, CSA certified) or 1 amp resistive @ 28 VDC.
Letter codes B and G – (1 and 2 Poles) 0.4 Volt-amps (VA) maximum @ 28 V maximum (AC or DC).
Contact Resistance – 50 milliohms maximum.
Insulation Resistance – 1,000 megohms minimum.
Dielectric Strength – 1,000 volts RMS minimum at sea level.
Electrical Life – 60,000 cycles minimum at full load-resistive.
Maximum Allowable Installation Force on Plunger – 10 pounds. Multi-pole contacts do not make and break simultaneously.

MATERIALS

Case — Diallyl Phthalate.
Bushing — Brass, nickel plated.
Housing — Stainless steel.
Plunger — Thermoplastic.
Pushbutton Cap — Molded nylon.
Bezel — Molded nylon.
Common Contact — Refer to contact material table above.
Center & End Contact — Refer to contact material table above.

Solder Lug Terminal

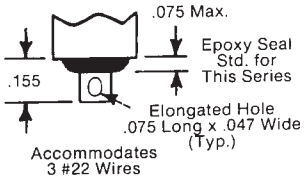

PC Terminal

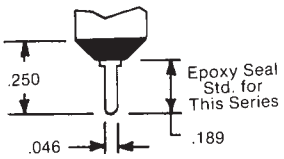

Sensitive Snap-Action Pushbutton Switches — Solder and P.C. Terminals (Momentary Action)

APPROXIMATE DIMENSIONS (For Optional Bezel Types Shown on Page 12)

OPTIONAL BEZEL TYPE
1, 2, 3 (SEE TABLE)
PS14 Shown w/Raised Cap

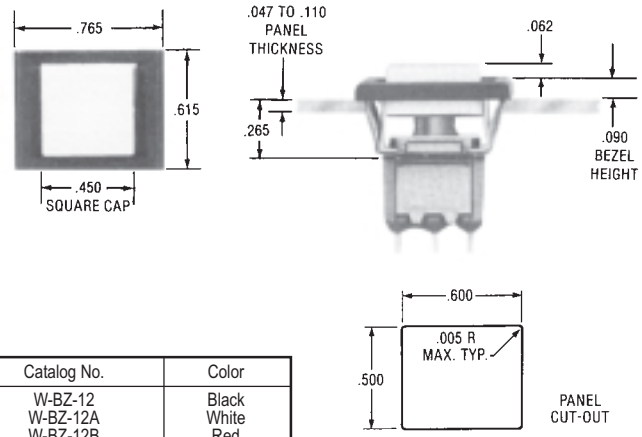

Catalog No.	Color
W-BZ-12 W-BZ-12A W-BZ-12B	Black White Red

OPTIONAL BEZEL TYPE
1, 2, 3 (SEE TABLE)
PS15 Shown w/Flush Cap

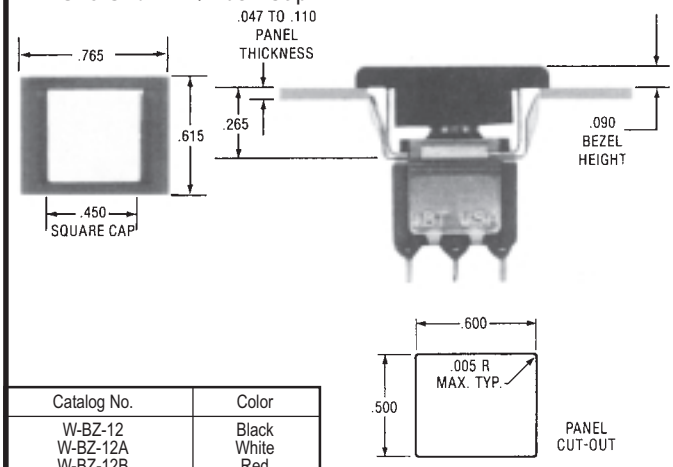

Catalog No.	Color
W-BZ-12 W-BZ-12A W-BZ-12B	Black White Red

OPTIONAL BEZEL TYPE 4
FOR LED
PS14 Shown w/Raised Cap

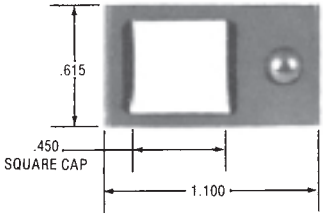

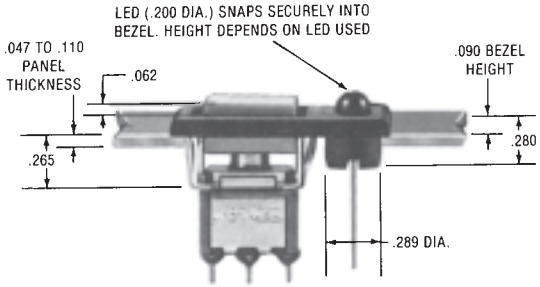

SWITCHES SUPPLIED WITHOUT LED LAMPS.

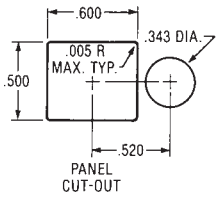

Catalog No.	Color
W-BZ-15	Black

OPTIONAL BEZEL TYPE 4
FOR LED
PS17 Shown w/Flush Cap

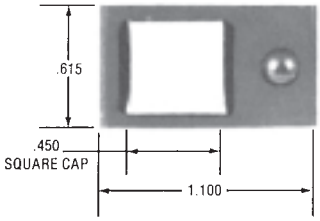

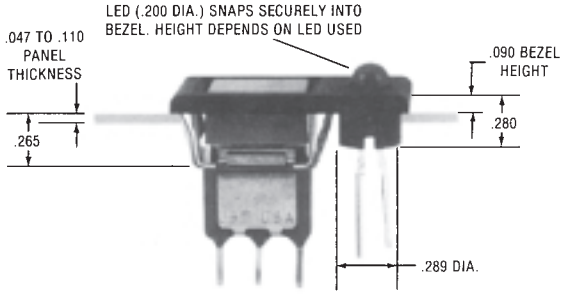

SWITCHES SUPPLIED WITHOUT LED LAMPS.

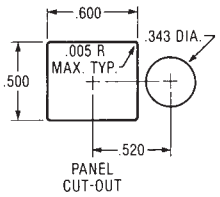

Catalog No.	Color
W-BZ-15	Black

OPTIONAL MOUNTING CLIP (For Use With PS14 Thru PS17 Series Only)

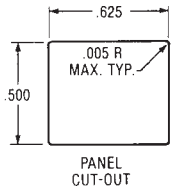

- For thick plastic panel mount applications (.094” - .125” thick)
- For availability consult Electroswitch.

Standard Ordering Table – Pushbutton Switches – Panelmount Maintained and Momentary Action (SPDT)

HOW TO ORDER YOUR DESIGN (**Bold** Face Type indicates items normally in Distributor Stock)

Following the table from left to right, the designer is able to specify the options wanted. The options are described and illustrated on pages 15-16.

To determine a part number select the options desired and fill in the boxes in the selection guides illustrated below.

Pushbutton Switch Selection Guide

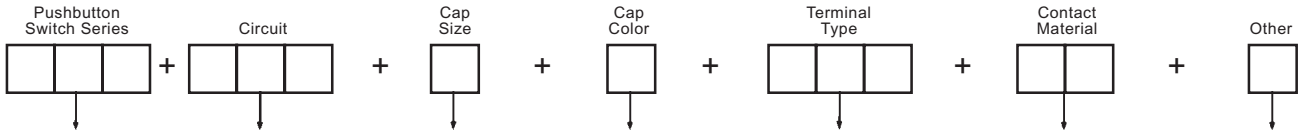

Base P/N	Circuit	Cap Size	Suffix Numbers & Letters — Add to Base Catalog Number			
			Cap Color	Terminal Options ❷	Contact Material-Type	Other Options
PB PBS Plunger Seal PBW Plunger & Panel Seal	**-123** — ON-NONE-ON Push to make contact and Push again to reverse action **-126** — ON-NONE-ON* Normally Open or Normally Closed. (For NC circuit use Terminal 2 & 1, for NO. 2 & 3, for NC and NO. 1, 2 & 3)	**0** — No Cap **1** — .200 Dia. **2** — .310 Dia. **3** — 375 Dia.	**0** — No Cap **1** — Black **2** — White **3** — Red	**Z** — Solder Lugs **C** — Printed Circuit **Z3** — Quick Connect **W** — .750" Wirewrap **W1** — .964" Wirewrap **W3** — .425" Wirewrap **W4** — 1.0625" Wirewrap **A** — Right Angle P.C. **AV** — Vertical P.C. .100 Spacing **AV2** — Vertical P.C. .150 Spacing	**B** — Gold/Nickel/ Brass ❶ **G** — Gold/Nickel/ Silver **Q** — Coin Silver **K** — ❸ **L** — ❸ **M** — ❸	Epoxy Sealed Terminals ❷

*Momentary Contact

❶ Ratings are 0.4 VA-28 VAC or DC.
❷ Epoxy seal standard on all terminal options.
❸ Same as B, G and Q respectively except terminals brass with tin nickel alloy over nickel plate. Consult factory for availability

EXAMPLES:

PB-12331ZQ = Maintained (Push-Push) circuit, .375" Black Cap, Solder Lug Terminals, Silver Contacts, 6 Amp Rating and Epoxy Sealed Terminals

PBW-12613CB = Plunger & Panel Seal, Momentary circuit, .200" Red Cap epoxy sealed Printed Circuit Terminals and 50 Millionths Gold over Brass contacts.

APPROXIMATE DIMENSIONS

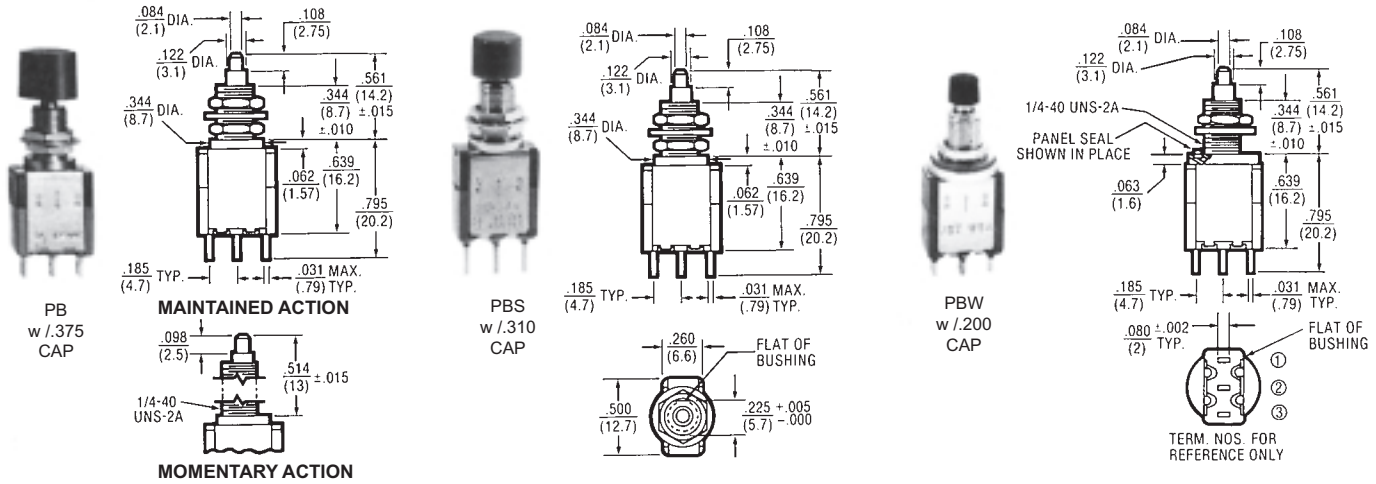

SPECIFICATIONS

Contact Rating – Letter codes G and Q – 6 amp at 125 VAC, 3 amp at 250 VAC (U.L. recognized, CSA certified) or 6 amp at 28 VDC resistive. Letter codes B and G – 0.5. volt-amp (VA) maximum @ 28 V maximum (AC or DC).

Life Under Load (Resistive)
Alternate Action Suffix – 123; 100,000 make-and break cycles
Momentary Action Suffix – 126; 60,000 make-and-break cycles

Initial Contact Resistance – 10 milliohms max. 3 VDC, 100 ma for both silver and gold plated contacts.

Insulation Resistance – 1,000 MBG.

Dielectric Strength – 1,000 volts rms at sea level.

Bushing Strength – 12 pound-inches without physical damage to switch.

	-126	-123
Operating Force	1.5 lb.	1.75 lb.
Pretravel	.043 Max.	.106 Max.
Overtravel	.009 Min.	.008 Min.

MATERIALS

Base (body) — Diallyl Phthalate.
Bushing — Brass, nickel plated.
Clamp (frame) — Stainless steel.
Switching Contacts and Rockers
Letter Code B — gold/nickel/brass
Letter Code G — gold/nickel/silver
Letter Code Q — Coin silver
Center Terminal
Letter Codes B, G — Gold flash/nickel/brass
Letter Code Q — Silver plated brass.
Hardware
PB and PBS Series
(2) W-NU-11 hex nuts
(1) W-WA-16 internal tooth lockwasher
PBW Series
(1) W-NU-11 hex nut
(1) W-WA-16 internal tooth lockwasher
(1) W-WA-44 neoprene panel seal

Pushbutton Switches — Panelmount Maintained and Momentary Action (SPDT)

Termination Options

C Printed Circuit	W Wire-Wrap	W1 Wire-Wrap	W3 Wire-Wrap	W4 Wire-Wrap	Z Standard	Z3 Quick Connect
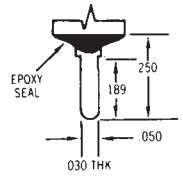	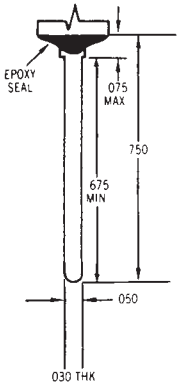	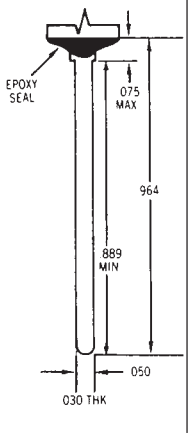	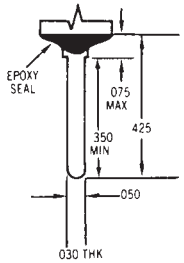	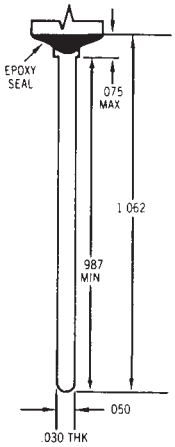	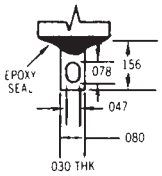	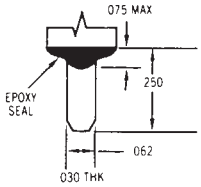

Mating Receptacle from AMP SPECIAL IND., P.O. Box 984, Paoli, Pa. 19301 Amp P/N single piece 61454 series, strip from 60900

NOTE: Wire-Wrap is a registered trademark of the Gardner-Denver Company.

APPROXIMATE DIMENSIONS

PB, PBS, PBW SWITCHES w/"A" TYPE RIGHT ANGLE P.C. TERMINALS

DIM.	PB-123	PB-126
"A"	.561	.514
"B"	.108	.098

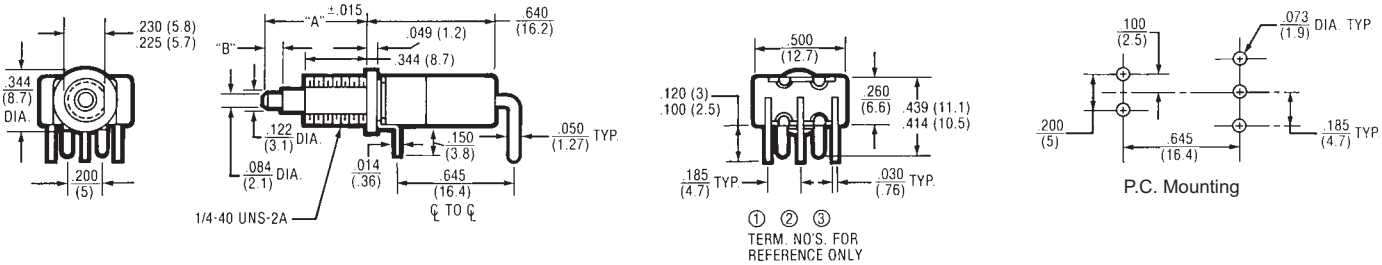

EPOXY SEALED P.C. TERMINALS ARE SUPPLIED AS STANDARD FOR THESE OPTIONS

PB, PBS, PBW SWITCHES w/ "AV" (.100" TERMINAL SPACING) OR "AV2" (.150" TERMINAL SPACING) TYPE VERTICAL P.C. TERMINALS

DIM.	PB-123	PB-126
"A"	.561	.514
"B"	.108	.098

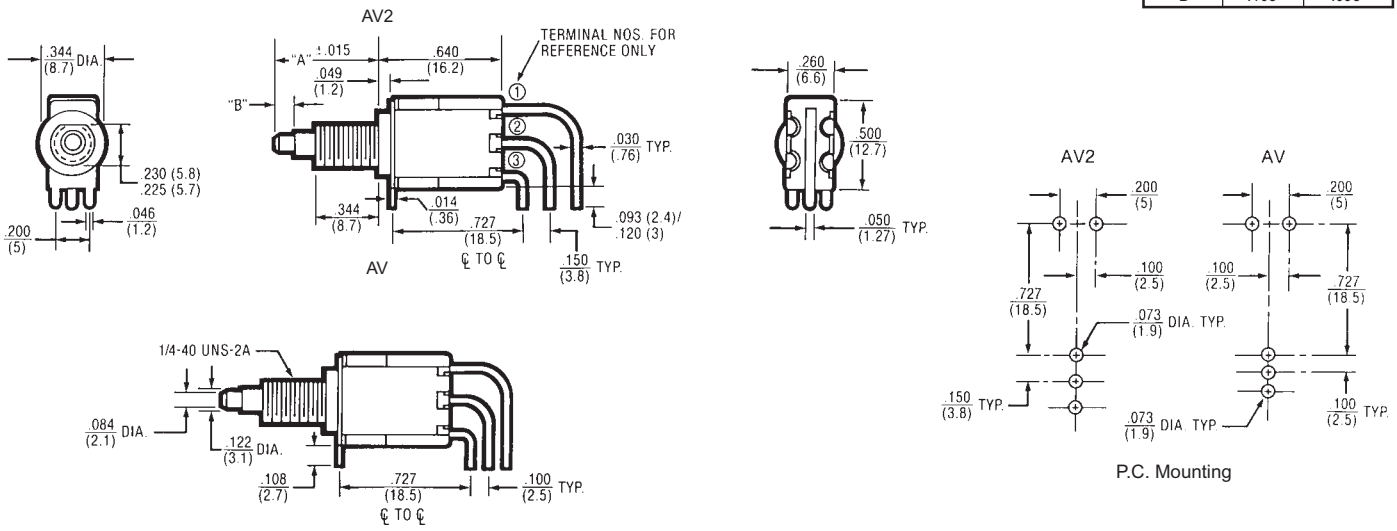

EPOXY SEALED P.C. TERMINALS ARE SUPPLIED AS STANDARD FOR THESE OPTIONS

Pushbutton Switches — Panelmount Maintained and Momentary Action (SPDT)

PUSHBUTTON CAP STYLES FOR PB SERIES SWITCHES ON PAGE 14

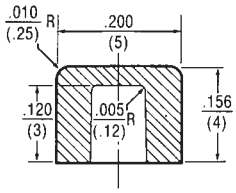

PART NUMBER	COLOR
W-KN-12	BLACK
W-KN-12A	WHITE
W-KN-12B	RED
W-KN-12C	GREEN ❶
W-KN-12D	BLUE
W-KN-12E	DK. GRAY
W-KN-12F	YELLOW
W-KN-12G	LT. GRAY

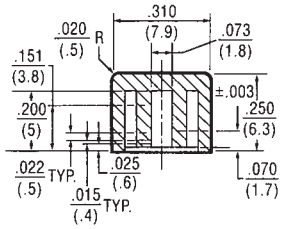

PART NUMBER	COLOR
W-KN-31	BLACK
W-KN-31A	WHITE
W-KN-31B	RED
W-KN-31C	GREEN ❶
W-KN-31D	BLUE
W-KN-31E	DK. GRAY
W-KN-31F	YELLOW
W-KN-31G	LT. GRAY

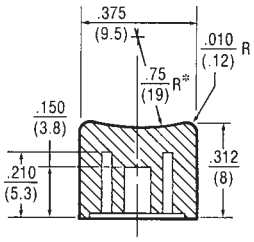

PART NUMBER	COLOR
W-KN-14	BLACK
W-KN-14A	WHITE
W-KN-14B	RED
W-KN-14C	GREEN ❶
W-KN-14D	BLUE
W-KN-14E	DK. GRAY
W-KN-14F	YELLOW
W-KN-14G	LT. GRAY

❶ Black, white, red are standard. Contact Electroswitch for availability on other colors shown.

DECORATIVE FACENUTS FOR PB SERIES AND PS SERIES

PART NUMBER W-NU-29A
(For .310 Dia. Caps)

Part No. W-NU-29A
Assembled to PB
Series Switch.

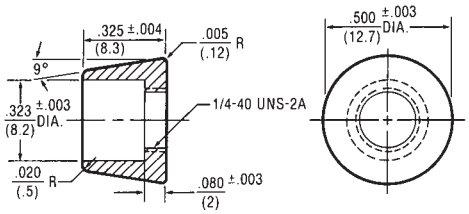

Finish: Bright chrome plate over brass

PART NUMBER W-NU-30A
(For .375 Dia. Caps)

Part No. W-NU-30A
Assembled to PS
Series Switch.
(See page 4)

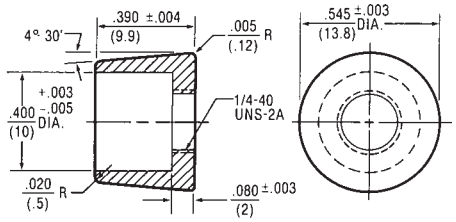

Finish: Bright chrome plate over brass

Sub Miniature Pushbutton Switches for Printed Circuit Boards — Wave Solderable
Series B8000 PCB Pushbutton Switches

SPECIFICATIONS

- Mechanical life — 500,000 operations minimum
- Contact resistance — 25 milliohms maximum
- Dielectric strength — 1000 VAC rms
- Ambient temperature range — -20°C to +70°C
- Weight — 0.06 ounces (1.7 grams)
- Electrical life — 100,000 operations minimum.

Schematic — Pushbutton PCB Switches

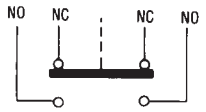

SELECTION TABLES (**Bold** Face Type indicates items normally in Distributor Stock)

Note: Optional Snap-On button must be ordered separately

B8500/B8600

Poles & Throw	Operation	Catalog No. By Terminal Type: Right Angle P.C. Mount .220" (5.6 mm)	Right Angle P.C. Mount .160" (4.1 mm)	P.C. Stand Up Mount .120" (3.1 mm)
2 Circ.	Momentary or Latch Down ❶	B8103		
	Momentary or Latch Down ❶ Momentary		B8500 B8600	

❶ For Latch-Down, depress plunger and rotate 30° clockwise.

OPTIONAL BUTTON CAPS

Button Cap Color	Catalog Number
Black	P281B
Red	P281R

CURRENT RATINGS

Nominal Rating, Amperes			
6 VDC	12 VDC	28 VDC	125 VDC
1	1	0.5	0.5

NOTE: For special .5 VA max. rating @ 28 VAC or DC contact Electroswitch.

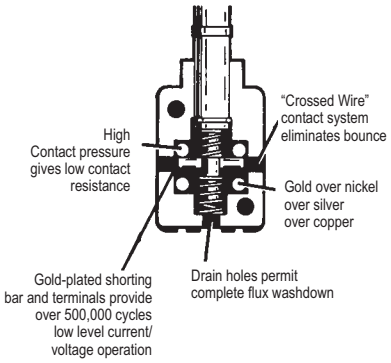

APPROXIMATE DIMENSIONS

B8103, B8500 and B8600 Series

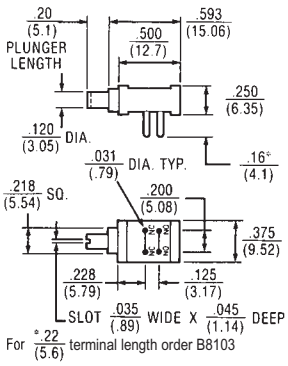

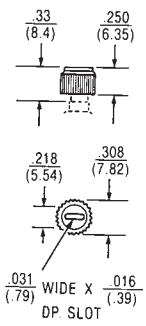

TYPE P281 SNAP-ON BUTTON (Optional)

Ultra-Miniature Pushbutton Switches AC and DC — Round Base

SPECIFICATIONS

- Resistive rating — .75 amperes resistive at 125 VAC normally open; .50 amperes resistive at 125 VAC normally closed; also rated 1.0 ampere normally open for 15,000 operations and .75 amperes normally closed for 10,000 operations. For 28 VDC rating 1.5 amperes normally open for 10,000 operations and 1.0 ampere normally closed for 10,000 operations. Dry circuit rated 10 milliamperes at 30 mVDC.
- Pretravel — .015 minimum/.050 maximum
- Overtravel — .030 minimum
- Operating force — 8 oz. maximum
- Electrical life — 50,000 operations minimum
- Mechanical life — 50,000 operations minimum
- Materials — contacts and terminals are gold plated copper
- Mounting hardware — One #8-40 nut supplied unassembled

APPROXIMATE DIMENSIONS

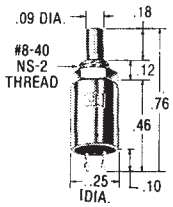

ACTUAL SIZE

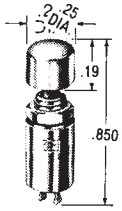

OPTIONAL BUTTON CAP MUST BE ORDERED SEPARATELY

SELECTION TABLE

Circuit	Plunger Color	Catalog Number
N.O.	Red	SA1RV20
N.O.	Black	SA1BV20
N.O.	Black	SA1BW20
N.O.	Red	SA1RW20

OPTIONAL BUTTON CAPS

Button Cap Color	Catalog Number	Description
Red	SW53AA1	.250" Slip on cap for SA1 series
Black	SW53AA2	.250" Slip on cap for SA1 series

CAUTION — MANUAL SWITCHES ARE AFFECTED BY HEAT, CLEANING SOLVENTS AND FLUX. EXTREME CARE SHOULD BE EXERCISED DURING HAND SOLDERING AND WAVE SOLDERING TO PREVENT SWITCH CONTAMINATION.

Keylite* Pushbutton Switches — Illuminated or Non-Illuminated

STANDARD TYPES

SLOPE KEYS — NARROW

SLOPE KEYS — WIDE

STEP KEYS — NARROW

STEP KEYS — WIDE

HALF KEYS — NARROW
(12 mm)

WINDOW KEYS — WIDE
(17 mm) Replaceable Legends

COLORED INSERTS

* Trademark of LUCAS N.S.F. Limited

SPECIFICATIONS

Ratings — Switch — 10mA at 24 VDC.
Mechanical Life and Electric Life — 5 million operations momentary, 10,000 maintained
Initial Contact Resistance — 50 milliohms max.
Insulation Resistance — 10^9 Ohms minimum
Contact Bounce — 2.0 ms maximum
Operating Force — 150 grams approx.
Total Key Travel — .098 (2.5 mm)
Pre-Travel — .039 (1 mm)
Ambient Temperature — -25°C to +85°C
(-13°F to +185°F)
Mounted Method — Direct soldering onto standard Matrix printed circuit board.
Interchangeable Keys — Large variety of colors

MATERIALS

Housing — Polycarbonate
Key Cap — ABS
Switching Contacts — Gold plate over silver plated brass.

CAUTION AND RECOMMENDATIONS FOR SOLDERING AND CLEANING

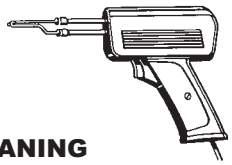

Contamination of the contacts of miniature switches is the most common cause of problems in low energy circuits. This is due to the inability of current to flow through the increased resistance of the switch contacts due to the contamination. As most contamination occurs during the installation and cleaning of the switch, proper care when installing the switch can reduce problems in this area. The following procedures should be followed to reduce the possibility of switch contact contamination.

Hand Solder

1. Use rosin core solder .030" — .040" diameter.
2. A small soldering iron in the 30 to 40 watt range should be used.
3. The solder joint should not be overheated.
4. Do not position switch with terminations straight up.
5. No clean up should be necessary. However, if used, do not allow solvents to enter non-sealed areas of switch.

Wave solder — Miniature Switches

Do not immerse or spray with solvents to remove flux except for switches designed for this type of cleaning.
The use of wave solder oil is not advised.

Clean Lines
Positive Tactile
Action, Bright
LED Indicators

Keys Are Detachable
and Interchangeable
with Improved
Push-On Design

Stand-Off Lugs
Minimize
Solder-Creepage

Half Key Feature

RECOMMENDED KEY REMOVAL METHOD
1. Operate switch. 2. Insert small screwdriver into resulting gap at 'A'. 3. Gently twist.
NOTE: When removing keys from within a matrix e.g. No. 3 above, first remove Nos. 9 and 6 by the above method then remove No. 3.

LED SPECIFICATIONS			
Color	Red	Green	Yellow
Maximum ratings			
Forward current	30mA	30mA	30mA
Forward voltage	3.0 @ 10mA	3.0 @ 20mA	3.0 @ 10mA
Intensity (typical)	2.0 mcd @ 10mA	1.5 mcd @ 20mA	2.0 mcd @ 10mA

Keylite* Pushbutton Switches — Illuminated or Non-Illuminated

KEYLITE ORDERING GUIDE — For assembled switches

Poles and Throw	Contact Operation	Base Catalog Number	Suffix Numbers — Add to Base Catalog Number: LED Colors and Quantity: Description	Suffix Number	Operator Key Style and Number or LED's: Style	Number of LED Holes	Suffix Number	Operator Key Color: Color	Suffix Number	Other Features: Feature	Suffix Number or Letter
1PDT	Momentary	SB6SDV	One Red, Narrow Spacing ❶	14	Slope, Narrow	None	1A	White	1	Colored Inserts	
			One Red, Wide Spacing ❷	15	Slope, Wide	None	2A			Applicable to Key Styles 2E, 4E & 6E Only	
			One Green, Narrow Spacing ❶	24	Slope Narrow	One	3A	Red	2	White	-1
			One Green, Wide Spacing ❷	25	Slope, Wide	One	4A	Green	3	Red	-2
			One Yellow, Narrow Spacing ❶	34	Slope, Narrow	Two	5A	Orange	4	Green	-3
			One Yellow, Wide Spacing ❷	35	Slope, Wide	Two	6A	Gray	5	Orange	-4
			Two Red ❸	44	Step, Narrow	None	1D	Black	6	Gray	-5
			Two Green ❸	54	Step, Wide	None	2D	Blue	7	Black	-6
			No LED	64	Step, Narrow	One	3D	Yellow	8	Blue	-7
			Two Yellow ❸	74	Step, Wide	One	4D			Yellow	-8
			One Red, One Green ❸❹	84	Step, Narrow	Two	5D			Static Shielding	S ❻
			One Red, One Yellow ❸❹	94	Step, Wide	Two	6D			Sealant Tape	T ❻
			One Green, One Yellow ❸❹	04	Half, Narrow	None	1B			Epoxy Sealed Terminals	E
					Half, Narrow	One	2B			Custom Stamping	❻
					Half, Narrow	Two	3B				
					Window, Wide	None	2C				
					Window, Wide	One	4C				
					Window, Wide	Two	6C				
					Colored, Wide Insert	None	2E				
					Colored, Wide Insert	One	4E				
					Colored, Wide Insert	Two	6E				
					Paddle Key	None	1F				
					Paddle Key	One	2F				
					Paddle Key	Two	3F				
					Illuminated paddle Key	No Light Bars	1G				
					Illuminated Paddle Key	One Light Bar	2G				
					Illuminated Paddle Key	Two Light Bars	3G				
					Slant Key	None	1H				

* Trademark of LUCAS N.S.F. Limited

FOOTNOTES

Mounting of LED's

❶ LED is mounted in center holes A(-) and B(+).
❷ LED is mounted in outer holes C(-) and D(+).
❸ LED's are mounted in holes C(+) and A(-).
holes B(-) and D(+).
❹ Colored LED's are mounted left to right.

ORDERING EXAMPLES:

SB6SDV143A1 — Momentary switch, narrow spaced red LED, white narrow slope Key.

Keylite Switch Dimensions

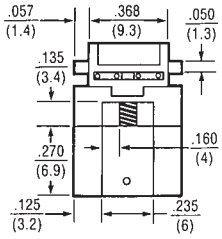

Base Without Key

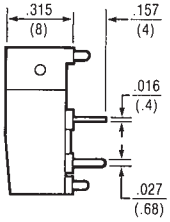

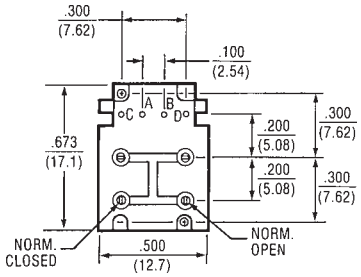

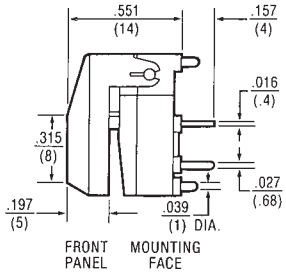

Slope Key Model

Base With Key

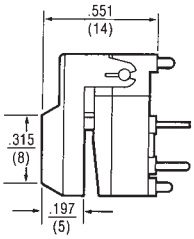

Step Key Model

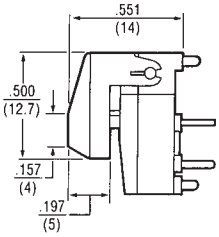

Half Key Model

Keylite* Pushbutton Switches — Illuminated or Non-Illuminated

OPERATOR KEY SELECTION TABLE

Key Description	Key Dimensions	Momentary Action: Key Part Number	Momentary Action: Number of LED Holes	Key Color	Color Code
Narrow Slope Key	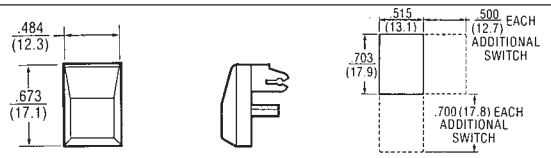 PANEL CUT OUT	W-KN-21	None	Black	No letter Suffix
		W-KN-22	1	White	A
		W-KN-23	2	Red	B
Wide Slope Key	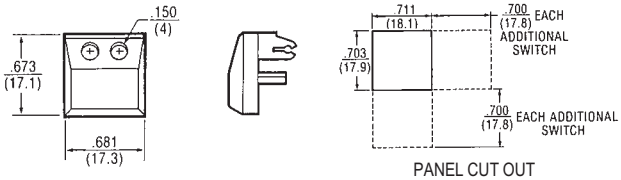 PANEL CUT OUT	W-KN-24	None	Green	C
		W-KN-25	1	Blue	D
		W-KN-26	2	Gray	E
Narrow Step Key	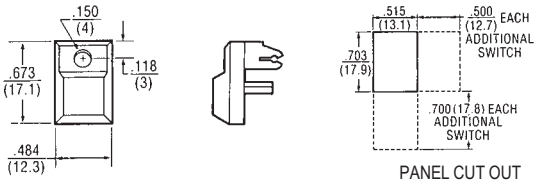 PANEL CUT OUT	W-KN-40	None	Yellow	F
		W-KN-41	1	Orange	G
		W-KN-42	2		
Wide Step Key	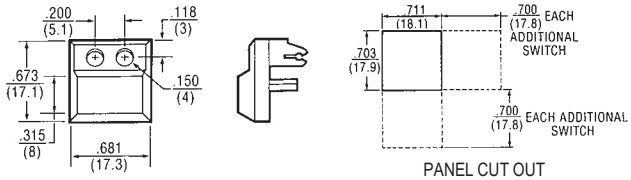 PANEL CUT OUT	W-KN-43	None		
		W-KN-44	1		
		W-KN-45	2		
Half Keys	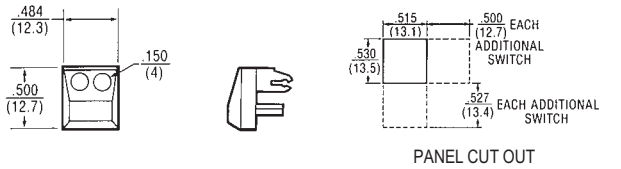 PANEL CUT OUT	W-KN-28	None		
		W-KN-29	1		
		W-KN-30	2		
Window Keys	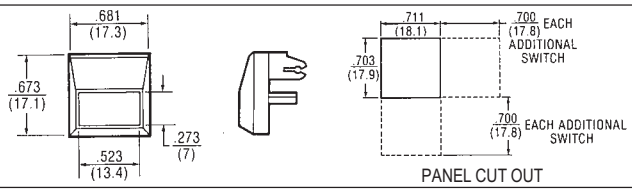 PANEL CUT OUT	W-KN-37	None		
		W-KN-38	1		
		W-KN-39	2		
Colored Insert Keys					

* Trademark of LUCAS N.S.F. Limited

Ordering Example: W-KN-21D is a blue narrow slope key w/no LED holes.
W-KN-45 is a black wide step key w/two LED holes.

P.C. Mounting Dimensions

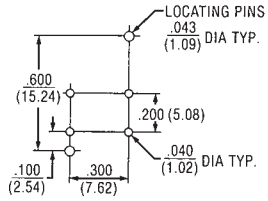

WITHOUT LED

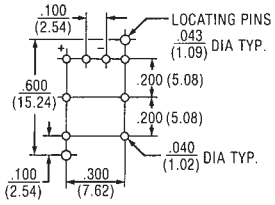

WITH 1 OR 2 LED's

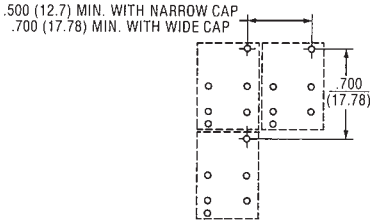

MULTIPLE SWITCH SPACING

Keylite* Pushbutton Switches — Illuminated or Non-Illuminated

OPERATOR KEY SELECTION TABLE

Description	Key Dimensions	Key Part Number	Illuminated Features / Number of Light Bars	Key Color	Suffix Code
Illuminated Paddle Key (Narrow Only) • LED's are mounted under the paddle • Color of light bar determined by LED	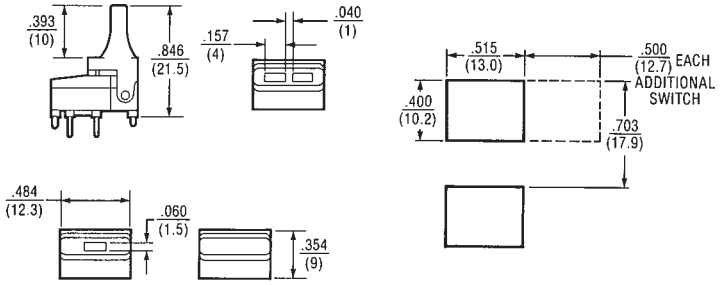 PANEL CUT-OUT	W-KN-68	None	Black White	No letter Suffix A
		W-KN-69	1		
		W-KN-70	2		
Paddle Keys (Narrow Only) • LED's are mounted outside the paddle	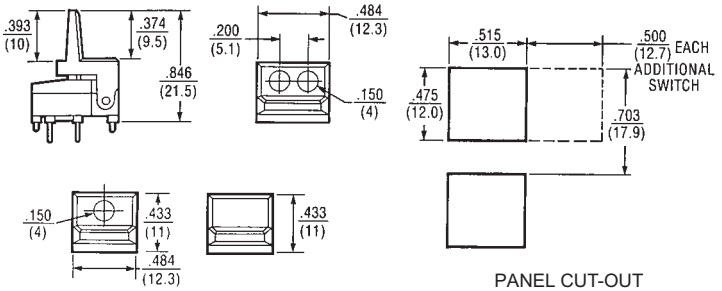 PANEL CUT-OUT	W-KN-71	Number of LED Holes	Red Green	B C
			None	Blue	D
		W-KN-72	1	Gray	E
		W-KN-73	2	Yellow Orange	F G
Slant Key (Narrow Only) • No LED's	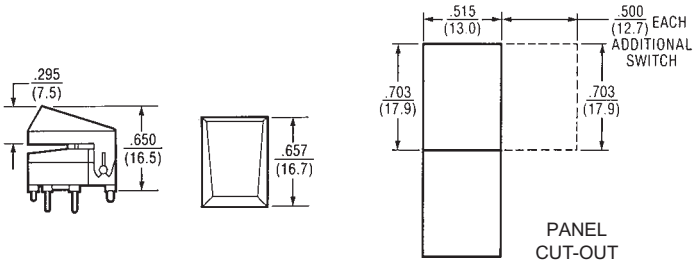 PANEL CUT-OUT	W-KN-74	None		

* Trademark of LUCAS N.S.F. Limited

Ordering Examples: W-KN-70E is a gray paddle key with 2 light bars.
W-KN-72D is a blue paddle key with 1 LED hole.
W-KN-74 is a black slant key.

ADDITIONAL KEYLITE OPTIONS

STATIC SHIELDING

- Static Shielding prevents static electricity from entering the circuit via the LED.
- Withstands up to 11,000 volts DC.
- Can be provided on any key style.

SEALANT TAPE

- Adhesive tape seals switches for wave soldering. Tape is discarded after wash. Key caps shipped unassembled.

CUSTOM INK STAMPING

Available upon request.

Keylite* Pushbutton Switches — Illuminated or Non-Illuminated

ADDITONAL KEYLITE OPTIONS — KEYBARS

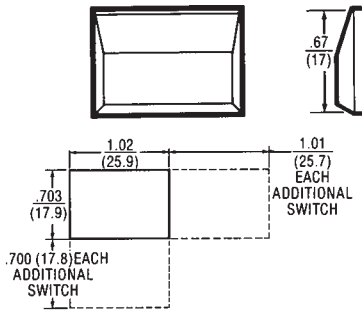

PANEL CUT-OUT

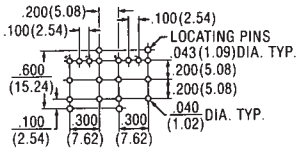

P.C. BOARD LAYOUT

DIMENSION: W/LED LOCATION HOLES

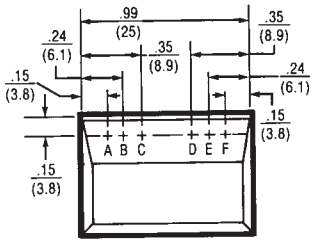

LED HOLE LOCATIONS
SEE NOTE 1.

NOTE:

1. Center LED holes (B, E) cannot be ordered with outer holes (A, C) or (D, F) respectively.
2. Accommodates 2 switches.
3. Standard LED hole is $\frac{.150}{(4)}$ diameter

.99" (25 mm) KEYBAR

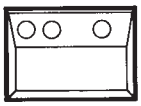

ORDERING EXAMPLES

EXAMPLE:

W-KN-49G-ACE, is the orange key with LED holes in positions A, C, and E. (Shown at left)

EXAMPLE:

W-KN-49, is the black key with no LED holes.

Part No.	Color
W-KN-49*	Black
W-KN-49A*	White
W-KN-49B*	Red
W-KN-49C*	Green
W-KN-49D*	Blue
W-KN-49E*	Gray
W-KN-49F*	Yellow
W-KN-49G*	Orange
W-KN-49H*	Brown
*For LED holes see note 1	

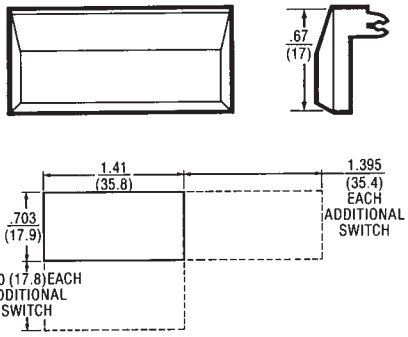

PANEL CUT-OUT

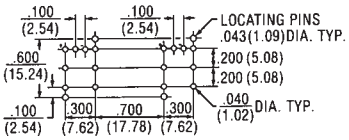

P.C. BOARD LAYOUT

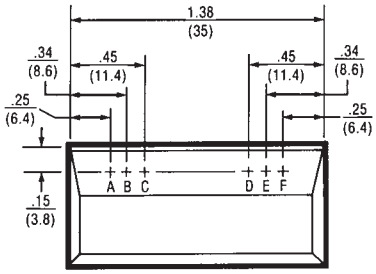

LED HOLE LOCATIONS
SEE NOTE 1.

NOTE:

1. Center LED holes (B, E) cannot be ordered with outer holes (A, C) or (D, F) respectively.
2. Accommodates 2 switches.
3. Standard LED hole is $\frac{.150}{(4)}$ diameter

1.38" (35 mm) KEYBAR

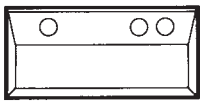

EXAMPLE:

W-KN-50C-BDF, is the green key with LED holes in positions B, D, and F. (Shown above)

EXAMPLE:

W-KN-50, is the black key with no LED holes.

Part No.	Color
W-KN-50*	Black
W-KN-50A*	White
W-KN-50B*	Red
W-KN-50C*	Green
W-KN-50D*	Blue
W-KN-50E*	Gray
W-KN-50F*	Yellow
W-KN-50G*	Orange
W-KN-50H*	Brown
*For LED holes see note 1	

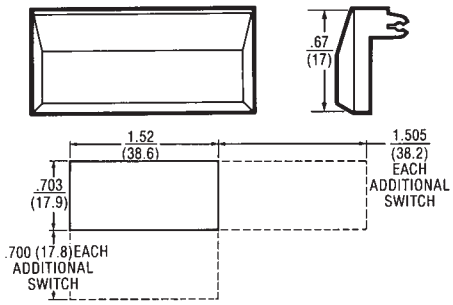

PANEL CUT-OUT

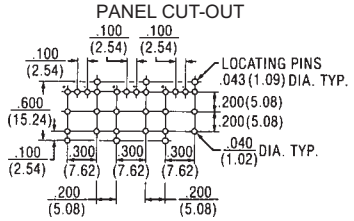

P.C. BOARD LAYOUT

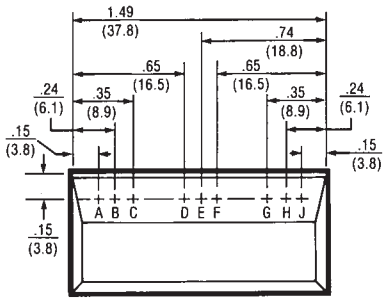

LED HOLE LOCATIONS
SEE NOTE 1.

NOTE:

1. Center LED holes (B, E, H) cannot be ordered with outer holes (A, C) or (D, F) or (G, J) respectively.
2. Accommodates 3 switches.
3. Standard LED hole is $\frac{.150}{(4)}$ diameter

1.49" (37.8 mm) KEYBAR

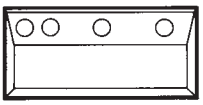

EXAMPLE:

W-KN-51B-ACEH, is the red key with LED holes in positions A, C, E, and H. (Shown above)

EXAMPLE:

W-KN-51, is the black key with no LED holes.

Part No.	Color
W-KN-51*	Black
W-KN-51A*	White
W-KN-51B*	Red
W-KN-51C*	Green
W-KN-51D*	Blue
W-KN-51E*	Gray
W-KN-51F*	Yellow
W-KN-51G*	Orange
W-KN-51H*	Brown
*For LED holes see note 1	

* Trademark of LUCAS N.S.F. Limited

Ordering Table — Standard Rocker & Paddle Switches

HOW TO ORDER YOUR DESIGN (**Bold** Face Type indicates items normally in Distributor Stock)

Following the table from left to right, the designer is able to specify the options wanted. The options are described and illustrated on pages 24-31. Refer to page 57 for mounting hardware.

To determine a part number select the options desired and fill in the boxes in the selection guides illustrated below.

Rocker Switch Selection Guide

Rocker Switch Series + Poles and Throw + Circuit + Actuator + Terminal Type + Contact Material + Actuator Color + Bezels + Other

Series	Poles and Throw		Circuits ⓫				Actuator Options		Terminal Options ❻		Contact Material		Actuator Color		Bezels		Other Option
	No.	Code	Description			Code	Type	Code	Type	Code	Type	Code	Color	Code	Type	Code	Type
B	SPDT	1			POS. "C"		Rocker ❼ (Screw Mount)	J1	Right Angle PC ❿	A	gold/brass	B	Dark Gray ❹	0	Bright Chrome ❸	1M	Epoxy Sealed ❻ Terminals
	DPDT	2	ON	OFF	ON	21	Paddle ❼ (Screw Mount)	J2	Vertical PC .100 Spacing	AV1	gold/silver	G	White	1	Black ❸	2M	
	3PDT	3	ON	NONE	ON	23	Rocker ❼ (Screw Mount)	J3	Vertical PC .150 Spacing	AV2	coin silver	Q	Black	2	Satin Chrome ❸	3M	
	4PDT	4	ON	NONE	ON*	26	Paddle ❼ (Screw Mount)	J5			⓬	K	Red	3	White ❷	1P	
			ON*	OFF	ON*	27	Snap-In Mount ❼ Rocker With Bezel	J11	PC Terminals	C	⓬	L	Green ❹	5	Black ❷	2P	
			ON	OFF	ON*	31			PC & Support ❶	V3	⓬	M	Blue ❹	6	Red ❷	3P	
			ON	ON	ON	32	Snap-In Mount ❼ Paddle With Bezel	J21	PC & Support ❶	V4			Light Gray ❹	8	Black w/LED ❷	4P	
			ON	ON	ON*	33	Large ❼ Snap-In Mount Rocker With Bezel	J37	Vertical PC .150 Spacing	V5			Yellow ❹	9	Green ❷❹	5P	
			NONE	ON	ON*	34 ❺	Large ❼ Snap-In Mount Paddle With Bezel	J47	PC & Support ❶	V6			Brown ❹	10	Blue ❷❹	6P	
			ON*	ON	ON*	35			PC & Support ❶	V7					Light Gray ❷❹	8P	
			NONE	ON	ON	53 ❺	Snap-In Rocker ❶❼	J50	.750 Wire Wrap	W					Yellow ❷❹	9P	
							Snap-In Rocker ❶❼	J53	.964 Wire Wrap	W1					Dark Gray ❷❹	0P	
							Snap-In Paddle ❶❼	J60	.425 Wire Wrap	W3							
							Snap-In Paddle ❶❼	J63	1.062 Wire Wrap	W4							
							Rocker Actuator ❾	J71	Solder Lugs	Z							
							Paddle Actuator ❾	J72									
							Rocker Actuator ❾	J73	Quick Connect	Z3							
							Paddle Actuator ❾	J75									
							Rocker Actuator ❾	J76									
							Paddle Actuator ❾	J77									

*Momentary Contact
❶ 1 and 2 pole only.
❷ For J50 and J60 only.
❸ For J11, J21, J37 and J47 only.
❹ Consult plant for availability.
❺ These circuits are **NOT** available with the following 3 and 4 pole options: A, AV1, AV2, V3, V4, V5, V6 and V7.
❻ Epoxy seal standard on all terminal options.
❼ Available with C, Z, Z3 or W-W4 terminations.
❽ Available with AV1, AV2, V3-V7 terminations.
❾ Available with A, AV1, AV2 or V3-V7 terminations.
❿ 1, 2 and 3 pole only.
⓫ See page 58 for construction detail, wiring and electrical diagrams.
⓬ Same as B, G and Q respectively except terminals brass with tin nickel alloy over nickel plate. Consult plant for availability.

EXAMPLES:

B121J71AQ2 = SPDT rocker switch with an ON-OFF-ON circuit, J71 style rocker (black), right angle P.C. terminals with coin silver contacts and epoxy sealed terminals.

B223J50ZQ22P = DPDT rocker switch with an ON-NONE-ON circuit, J50 style rocker (black), solder lug terminals with coin silver contacts, black snap in bezel and epoxy sealed terminals.

Standard Rocker & Paddle Switches — Specifications and Materials

SPECIFICATIONS

Contact Rating — Letter codes G and Q — 6 amp at 125 VAC, 3 amp @ 250 VAC, (U.L. recognized, CSA certified) or 6 amp at 28 VDC resistive.
Letter codes B and G — 0.5. volt-amp (VA) maximum @ 28 V maximum (AC or DC).

Life Under Load — 60,000 make-and-break cycles — resistive load only.

Initial Contact Resistance — 10 milliohms maximum. 3 VDC, 100 ma for both silver and gold plated contacts.

Insulation Resistance — 1 & 2 pole — 1,000 megohms minimum.
3 & 4 pole — 1,000 megohms minimum.

Dielectric Strength — 1,000 volts rms at sea level.

Operating Temperature — 30° to +85°C

MATERIALS

Base (body) — 1- and 2-pole —Diallyl Phthalate. (DAP).
3- and 4-pole — high strength phenolic.

Rocker/Paddle — Molded nylon.

Bushing — Brass, nickel plated.

Clamp (frame) — Stainless steel.

Support Bracket — Steel, tin plated.

Metal Bezel — Spring steel.

Plastic Bezel — Molded nylon.

Switching Contacts and Rockers —
Letter Code B — gold/nickel/brass
Letter Code G — gold/nickel/silver
Letter Code Q — Coin silver

Center Terminal
Letter Codes B, G — Gold flash/nickel/brass
Letter Code Q — Silver plated brass.

Hardware — See page 57.

APPROXIMATE BASE DIMENSIONS

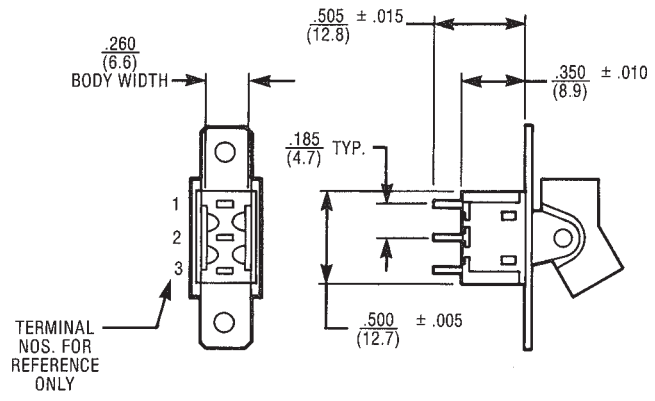

ONE POLE

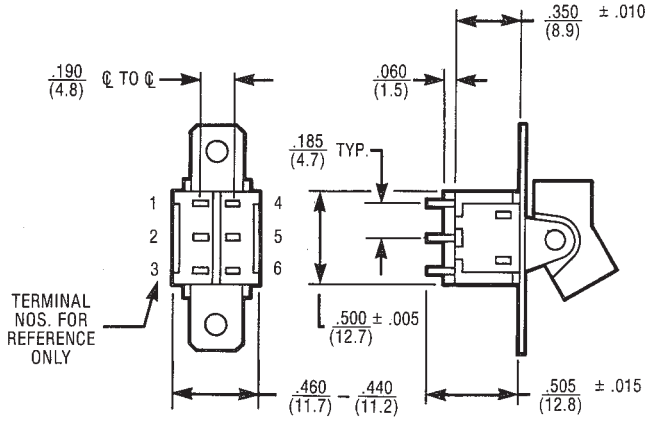

TWO POLE

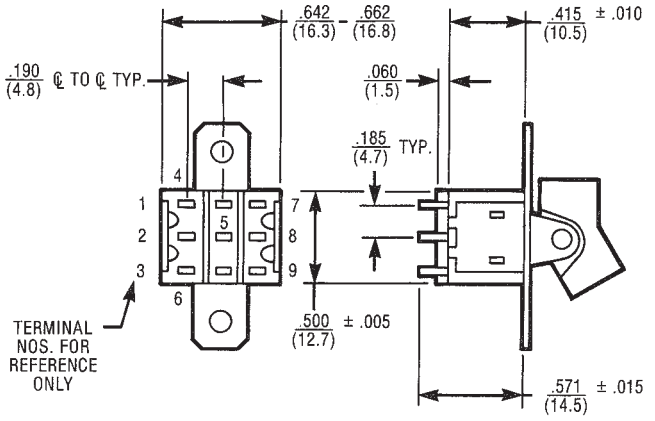

THREE POLE

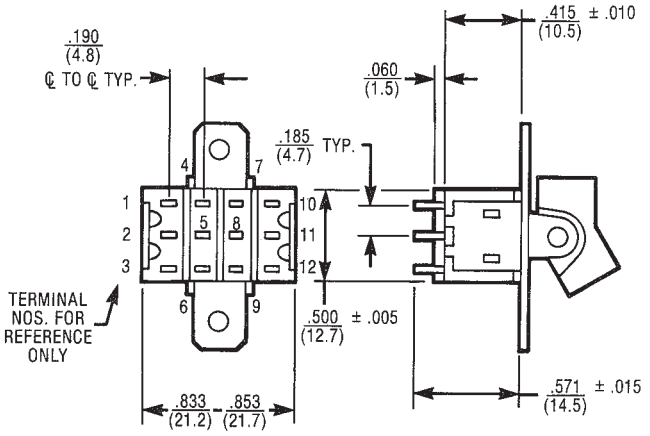

FOUR POLE

Rocker Actuator Options For P.C. Mounting

J71

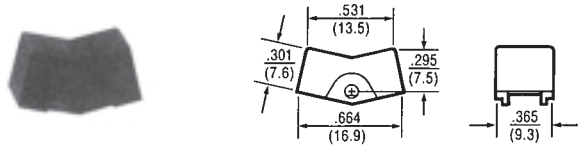

J72

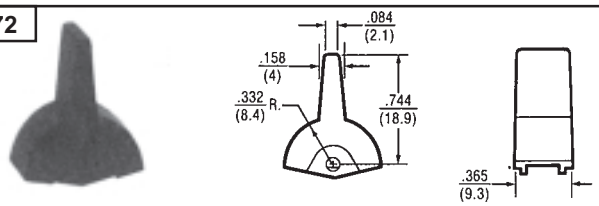

J73

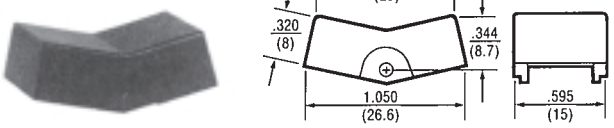

J75

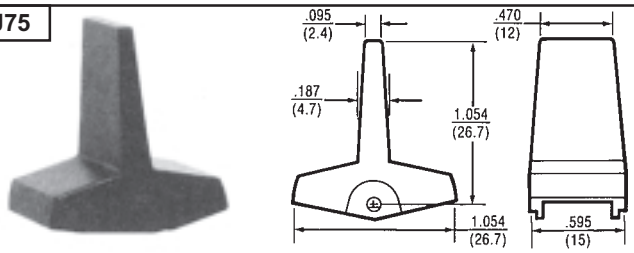

J76

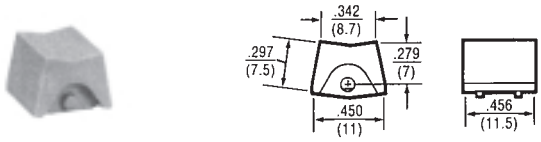

J77

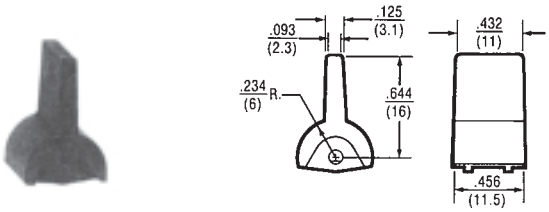

ACTUATOR/MOUNTING OPTIONS

J1 Screw Mount Rocker

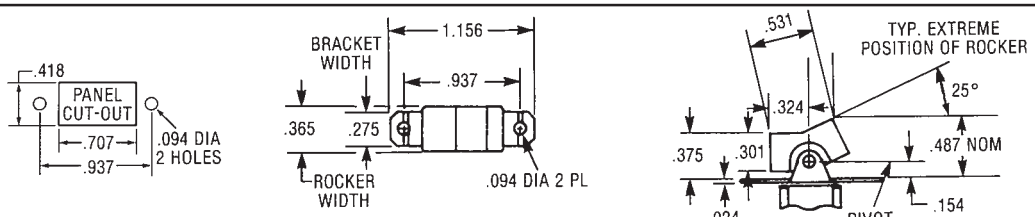

Refer to Page 57 for Mounting Hardware

J2 Screw Mount Paddle Rocker

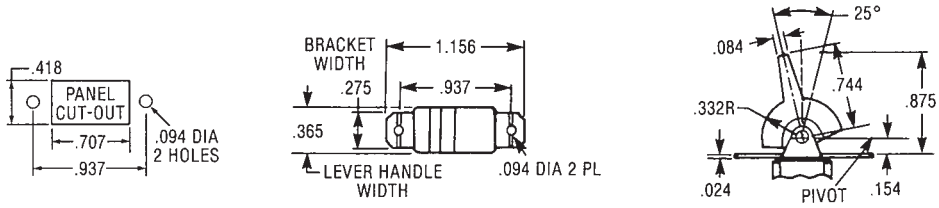

Refer to Page 57 for Mounting Hardware

J3 Screw Mount Large Rocker

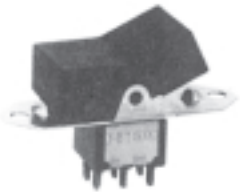

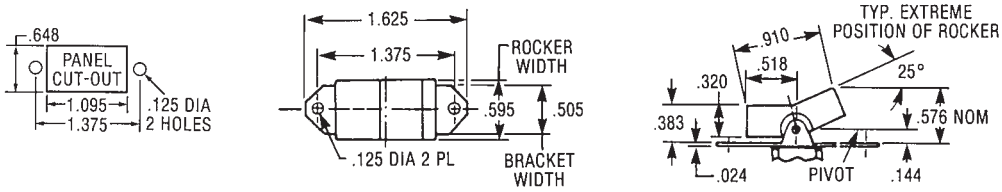

Refer to Page 57 for Mounting Information

J5 Screw Mount Large Tappered Paddle Rocker

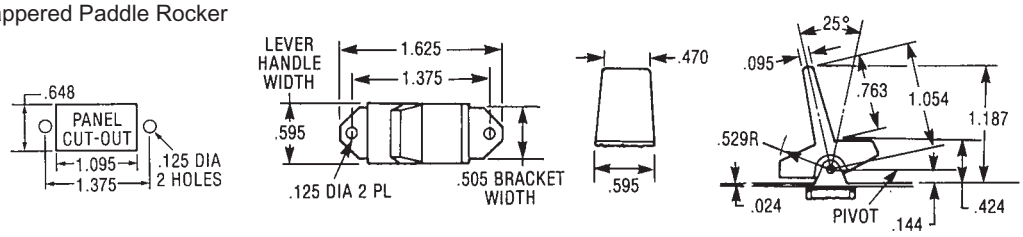

Refer to Page 57 for Mounting Hardware

J11 Rocker with Snap-In Bezel ❶

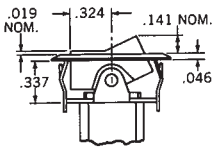

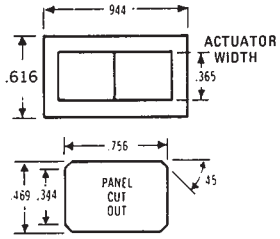

One Pole

PANEL THICKNESS
.062 to .125

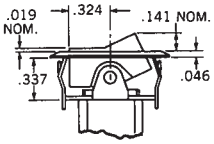

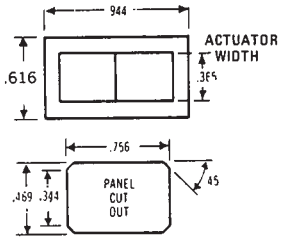

Two Pole

PANEL THICKNESS
.062 to .125

J21 Paddle with Snap-In Bezel ❶

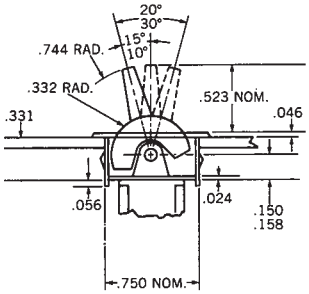

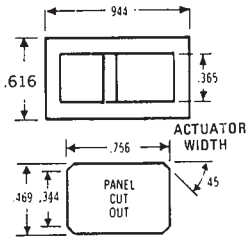

One Pole

PANEL THICKNESS
.062 to .125

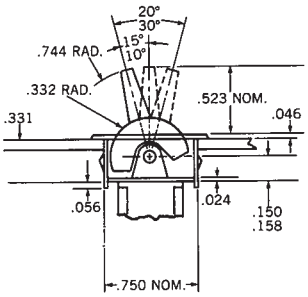

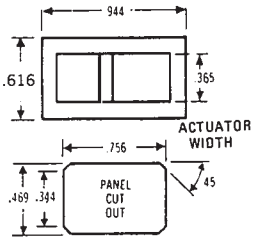

Two Pole

PANEL THICKNESS
.062 to .125

J37 Rocker Actuator/Mounting Option

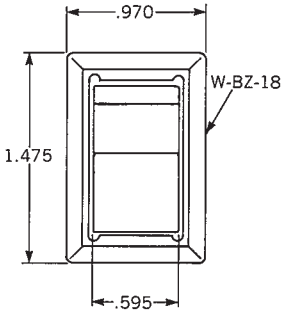

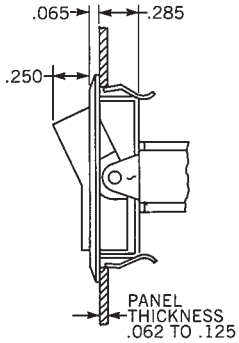

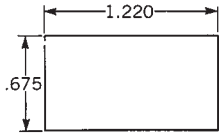

J47 Paddle Actuator/Mounting Option

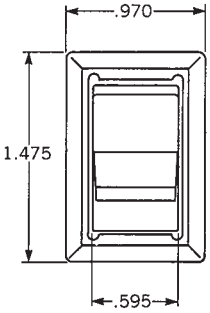

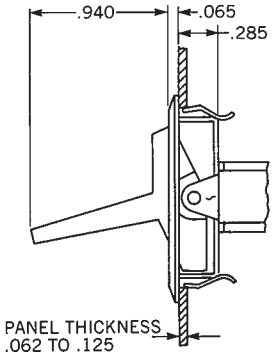

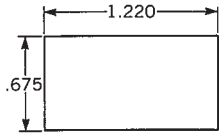

❶ Three and four pole switches require assembly from back of panel.

Actuator and Mounting Options

J50 = Snap in Mounting w/Low Profile Rocker ❶
J60 = Snap in Mounting w/Low Profile Paddle

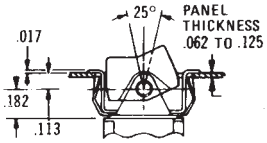

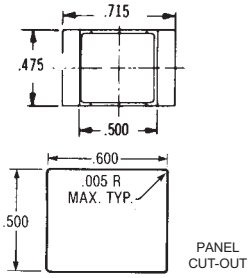

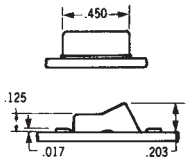

J50 Rocker Style

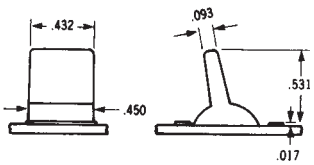

J60 Paddle Style

J53 = Snap in Mounting w/High Profile Rocker ❶
J63 = Snap in Mounting w/High Profile Paddle

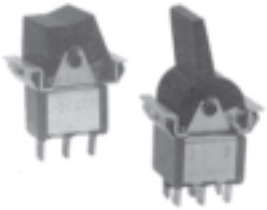

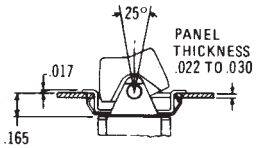

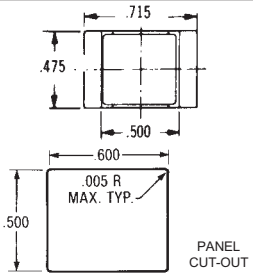

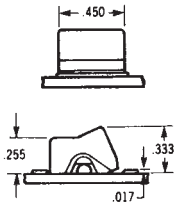

J53 Rocker Style

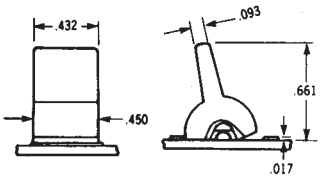

J63 Paddle Style

OPTIONAL BEZELS (For use with J50/J60 Series only)

Bezel Assembled with J50/J60 Series

Color	Code	Part No.
White	1P	W-BZ-12A
Black	2P	W-BZ-12
Red	3P	W-BZ-12B

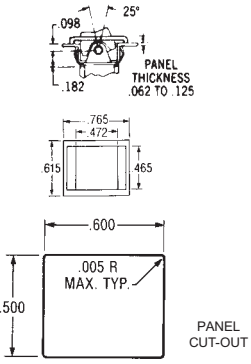

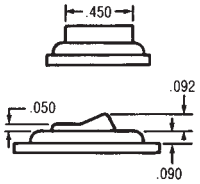

J50 Rocker Style w/Bezel

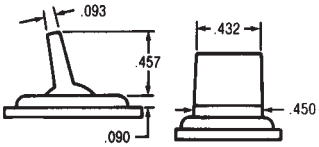

J60 Paddle Style w/Bezel

Bezel for L.E.D. Assembled with J50/J60 Series (Note: LED is not supplied)

Color	Code	Part No.
Black	4P	W-BZ-15

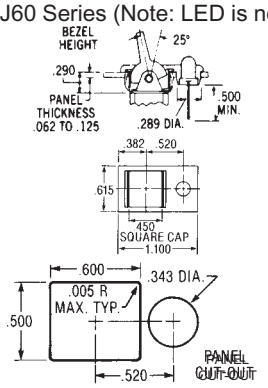

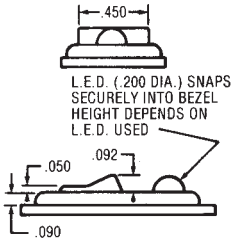

J50 Rocker Style w/Bezel for L.E.D.

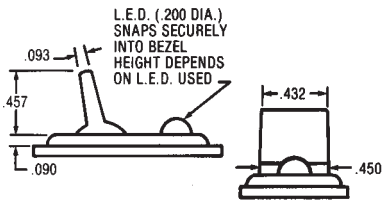

J60 Paddle Style w/Bezel for L.E.D.

OPTIONAL MOUNTING CLIP (For use with J50/J60 Series only)

Clip Assembled with J50/J60 Series

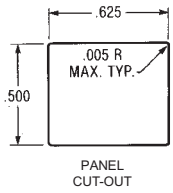

- For thick plastic panel mount applications (.094" - .125" thick)
- Consult factory for availability

❶ All rocker switches on this page are snap-in from the front of the panel. No behind panel assembly hardware is needed.

Termination Options

C Printed Circuit

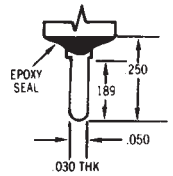

W Wire-Wrap

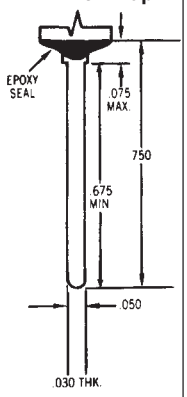

W1 Wire-Wrap

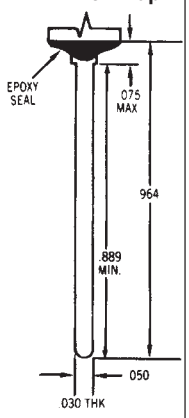

W3 Wire-Wrap

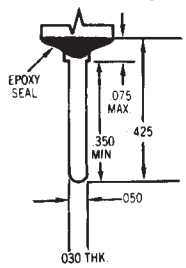

W4 Wire-Wrap

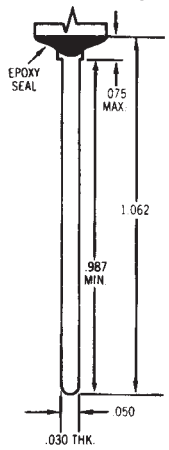

NOTE: Wire-Wrap is a registered trademark of the Gardner-Denver Company.

Z Standard

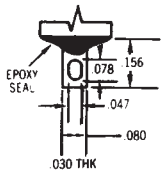

Z3 Quick Connect

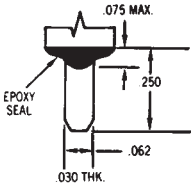

Mating Receptacle from AMP SPECIAL IND., P.O. Box 984, Paoli, Pa. 19301 Amp P/N single piece 61454 series, strip from 60900

TERMINATION/MOUNTING OPTIONS

A

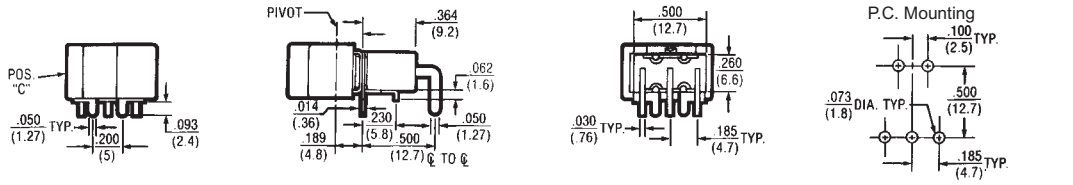

ONE POLE **EPOXY SEALED P.C. TERMINALS ARE SUPPLIED AS STANDARD FOR THESE OPTIONS**

A

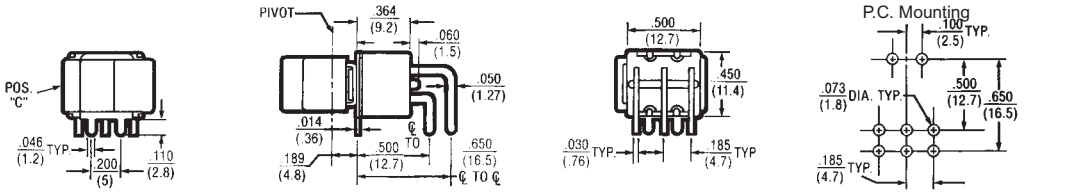

TWO POLE **EPOXY SEALED P.C. TERMINALS ARE SUPPLIED AS STANDARD FOR THESE OPTIONS**

A

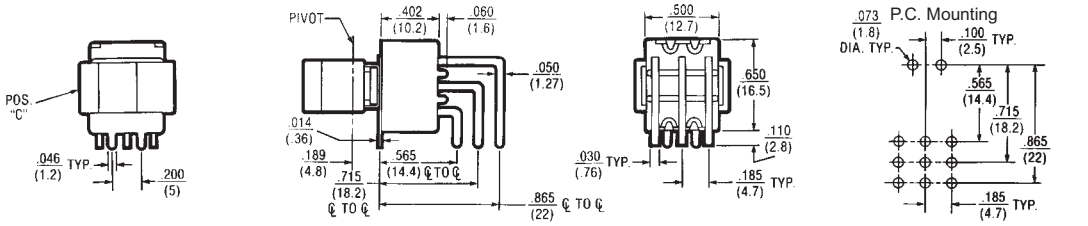

THREE POLE **EPOXY SEALED P.C. TERMINALS ARE SUPPLIED AS STANDARD FOR THESE OPTIONS**

V5 ❶

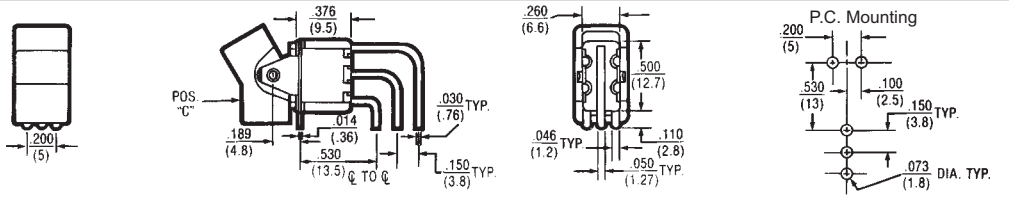

ONE POLE **EPOXY SEALED P.C. TERMINALS ARE SUPPLIED AS STANDARD FOR THESE OPTIONS**

V5 ❶

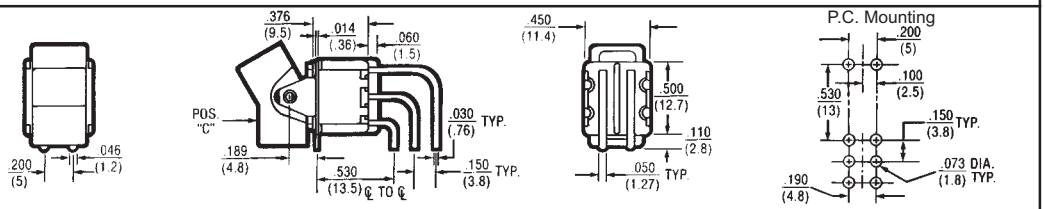

TWO POLE **EPOXY SEALED P.C. TERMINALS ARE SUPPLIED AS STANDARD FOR THESE OPTIONS**

❶ The V5 option is available in Three and Four Pole Circuits.

Termination/Mounting Options

AV1 w/.100" Terminal Spacing
AV2 w/.150" Terminal Spacing (Pictured Below)

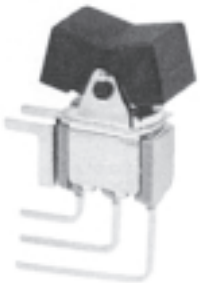

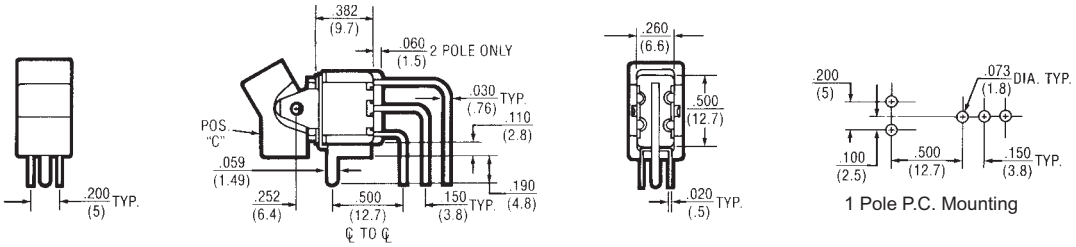

1 Pole P.C. Mounting

ONE POLE **EPOXY SEALED P.C. TERMINALS ARE SUPPLIED AS STANDARD FOR THESE OPTIONS**

AV1 w/.100" Terminal Spacing
AV2 w/.150" Terminal Spacing (Pictured Below)

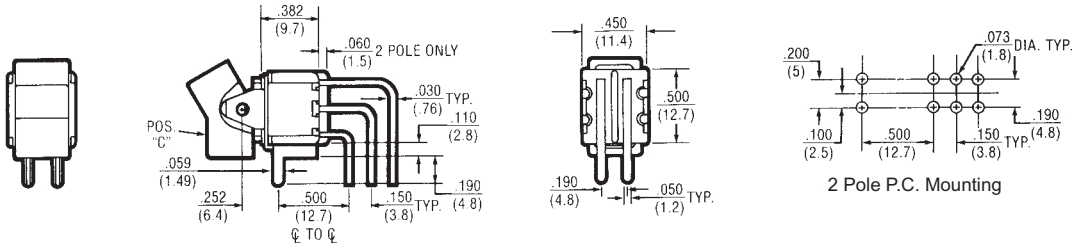

2 Pole P.C. Mounting

TWO POLE **EPOXY SEALED P.C. TERMINALS ARE SUPPLIED AS STANDARD FOR THESE OPTIONS**

AV1 w/.100" Terminal Spacing
AV2 w/.150" Terminal Spacing (Pictured Below)

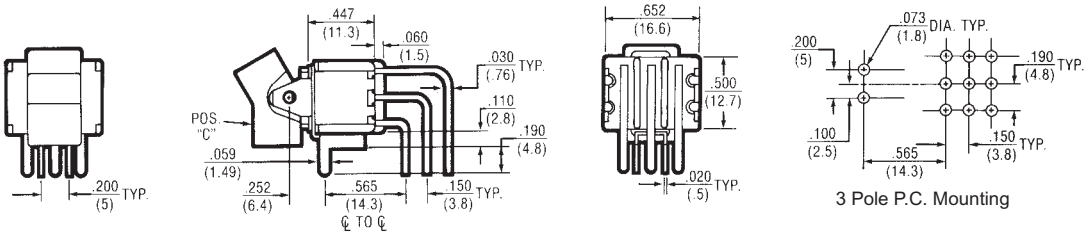

3 Pole P.C. Mounting

THREE POLE **EPOXY SEALED P.C. TERMINALS ARE SUPPLIED AS STANDARD FOR THESE OPTIONS**

AV1 w/.100" Terminal Spacing
AV2 w/.150" Terminal Spacing (Pictured Below)

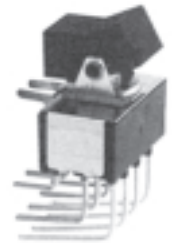

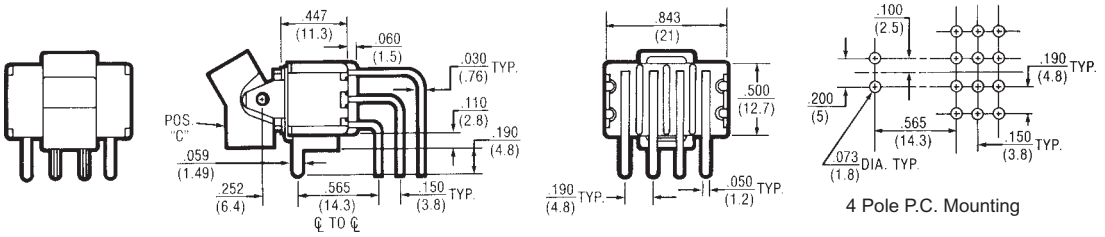

4 Pole P.C. Mounting

FOUR POLE **EPOXY SEALED P.C. TERMINALS ARE SUPPLIED AS STANDARD FOR THESE OPTIONS**

Termination/Mounting Options

V3

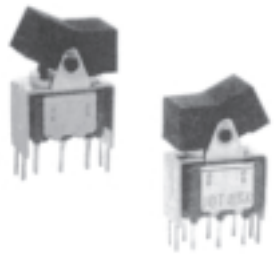

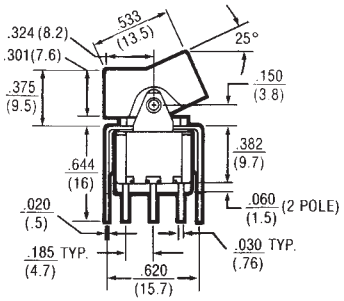

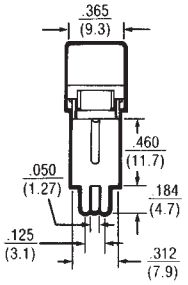

1 Pole

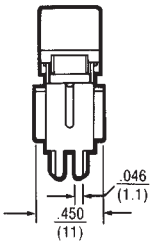

2 Pole

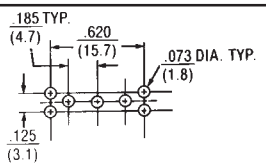

1 Pole P.C. Mounting

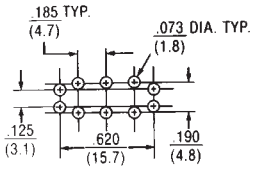

2 Pole P.C. Mounting

EPOXY SEALED P.C. TERMINALS ARE SUPPLIED AS STANDARD FOR THESE OPTIONS

V4

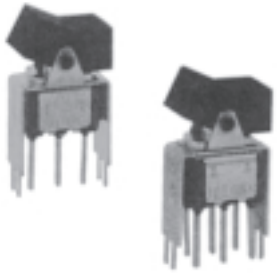

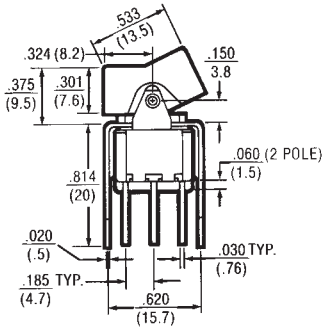

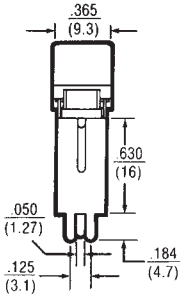

1 Pole

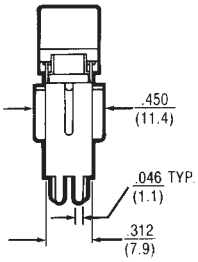

2 Pole

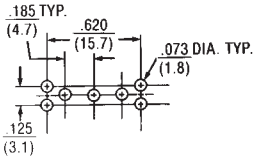

1 Pole P.C. Mounting

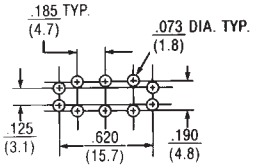

2 Pole P.C. Mounting

EPOXY SEALED P.C. TERMINALS ARE SUPPLIED AS STANDARD FOR THESE OPTIONS

V6

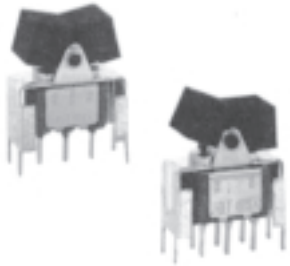

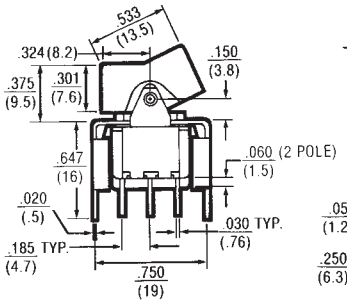

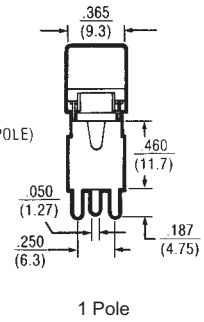

1 Pole

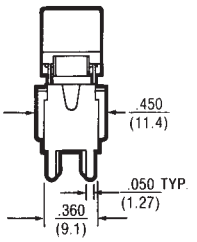

2 Pole

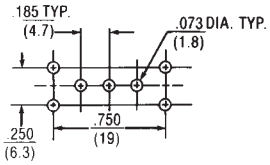

1 Pole P.C. Mounting

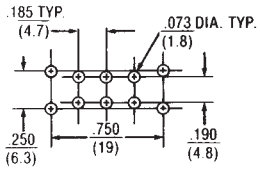

2 Pole P.C. Mounting

EPOXY SEALED P.C. TERMINALS ARE SUPPLIED AS STANDARD FOR THESE OPTIONS

V7

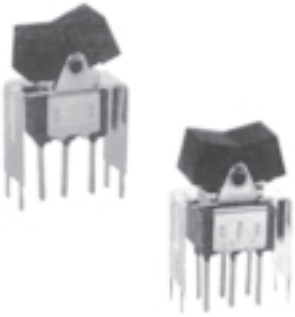

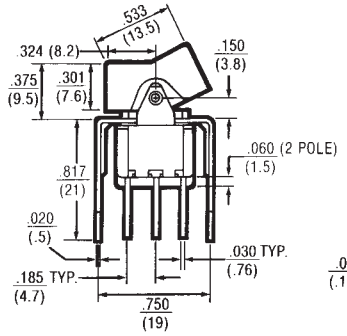

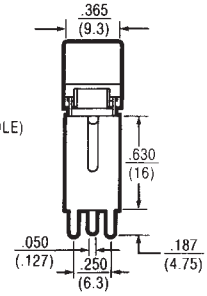

1 Pole

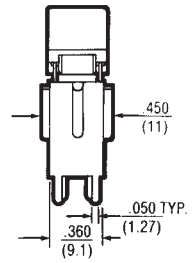

2 Pole

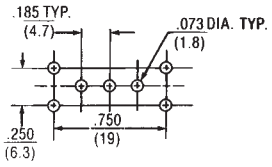

1 Pole P.C. Mounting

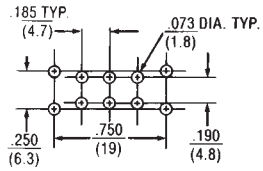

2 Pole P.C. Mounting

EPOXY SEALED P.C. TERMINALS ARE SUPPLIED AS STANDARD FOR THESE OPTIONS

Ordering Table — Washable Rocker & Paddle Switches

Designed to be wave soldered along with other Printed Circuit Board Components and withstand associated cleaning processes.

HOW TO ORDER YOUR DESIGN (**Bold** Face Type indicates items normally in Distributor Stock)

Following the table from left to right, the designer is able to specify the options wanted. The options are described and illustrated on the following pages.

To determine a part number select the options desired and fill in the boxes in the selection guides illustrated below.

Washable Rocker/Paddle Switch Selection Guide

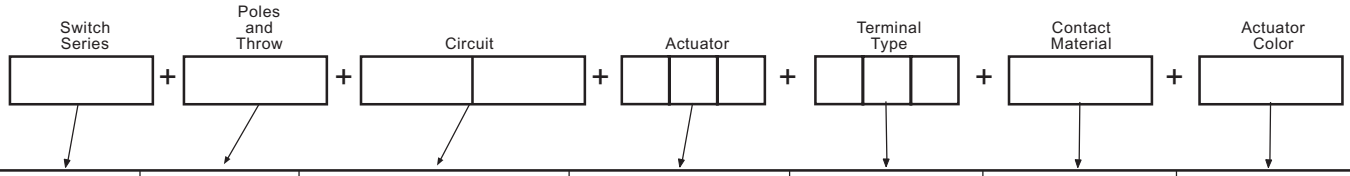

Series		Poles and Throw		Circuits ❸				Actuator Options		Terminal Options		Contact Material		Actuator Color	
Type	Code	No.	Code	Description			Code	Type	Code	Type	Code	Type	Code	Type	Code
Rocker	WR	SPDT	1			POS. "C"		Rocker ❺ (Screw Mount)	J1	Right Angle PC	A	Gold/Brass	B	White	1
Paddle	WP	DPOT	2	ON	OFF	ON	21	Paddle ❺ (Screw Mount)	J2	Vertical PC .150 Spacing	AV2	Gold/Silver	G	Black	2
				ON	NONE	ON	23	Rocker Actuator ❻	J71	PC Terminals	C	Coin Silver	Q	Other ❷	
				ON	NONE	ON*	26	Paddle Actuator ❻	J72	PC & Support	V3	❹	K		
				ON*	OFF	ON*	27	Rocker Actuator ❻	J76	.750 Wire Wrap	W	❹	L		
				ON	OFF	ON*	31	Paddle Actuator ❻	J77	.964 Wire Wrap	W1	❹	M		
				ON	ON	ON	32 ❶			.425 Wire Wrap	W3				
				ON	ON	ON*	33 ❶			1.062 Wire Wrap	W4				
				ON*	ON	ON*	35 ❶			Solder Lug	Z				
										Quick Connect	Z3				

*Momentary Contact.
❶ 2 Pole Only.
❷ Contact Electroswitch for availability.
❸ Refer to page 59 for circuit diagram.
❹ Same as B, G, and Q respectively except terminals brass with tine nickel alloy over nickel plate. Consult factory for availability.
❺ Available with C, Z, Z3, W-W4 termination.
❻ Available with A, AV2, V3, termination.

EXAMPLES:

WR123J71AQ2 = SPDT rocker switch with an ON-NONE-ON circuit, J71 style rocker actuator (black), right angle P.C. terminals with coin silver contacts.

WP227J2CG2 = DPDT paddle switch with an ON*-OFF-ON* circuit, J2 style paddle actuator (black), screw-in direct panel mounting frame, P.C. terminals with gold/silver contacts.

SPECIFICATIONS:

Contact Ratings —
Letter codes G and Q — 6 amp at 125 VAC, 3 amp @ 250 VAC (U.L. recognized, CSA certified) or 6 amp at 28 VDC resistive.
Letter codes B and G – 0.5. volt-amp (VA) maximum @ 28 V maximum (AC or DC).

Life Under Load — 60,000 make-and-break cycles — resistive load only.

Initial Contact Resistance — 10 milliohms maximum 3 VDC, 100 ma for both silver and gold plated contacts.

Insulation Resistance — 1,000 megohms, min.

Dielectric Strength — 1,000 volts rms at sea level.

Operating Temperature — -30 degrees C to 85 degrees C.

MATERIALS:

Base & Bushing — Thermoplastic high temperature (UL 94V-O).

Rocker/Paddle — Molded nylon.

Mounting Bracket — Molded nylon.

Support Brackets — Brass or steel tin plated.

Switching Contacts and Rockers —
Letter Code B — gold/nickel/brass
Letter Code G — gold/nickel/silver
Letter Code Q — Coin silver

Center Terminal
Letter Codes B & G — Gold flash/nickel/brass
Letter Code Q — Silver plated brass.

Hardware — Two mounting screws, two nuts, two spacers for .094" thick panel, and two lockwashers are supplied standard on screw mounted switches.

Washable Rocker & Paddle Switches — Specifications

APPROXIMATE BASE DIMENSIONS

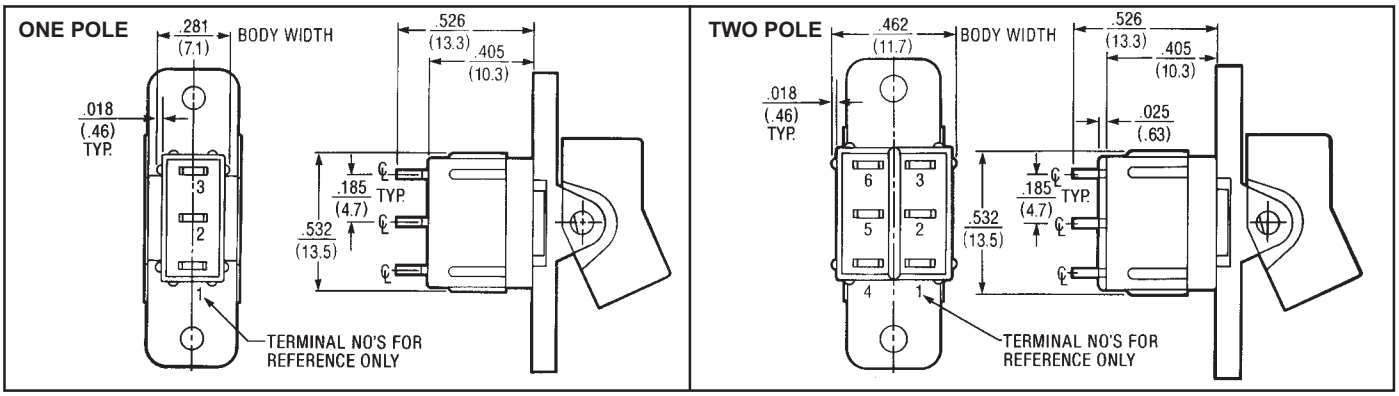

ACTUATOR/MOUNTING OPTIONS

J1 Screw Mount Rocker

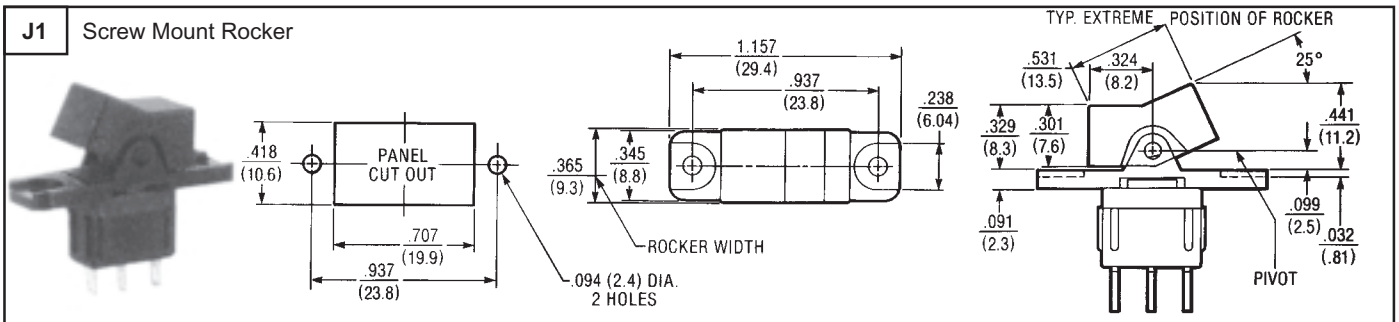

J2 Screw Mount Paddle

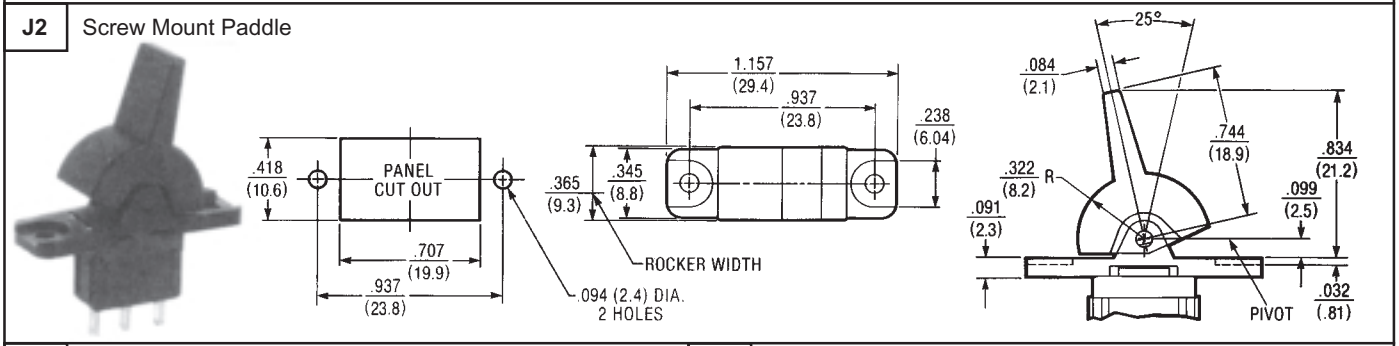

J71

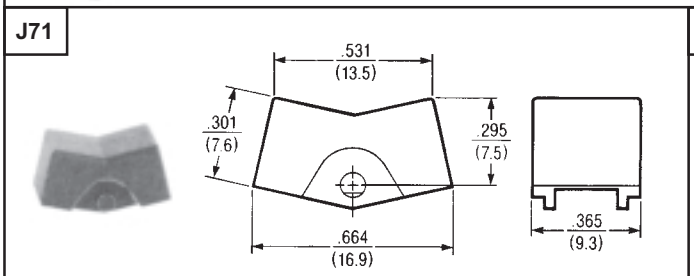

J72

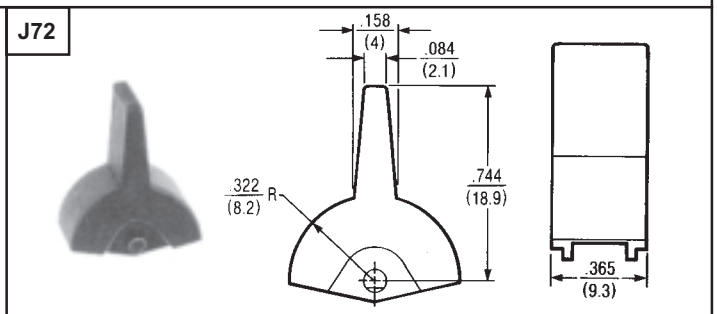

J76

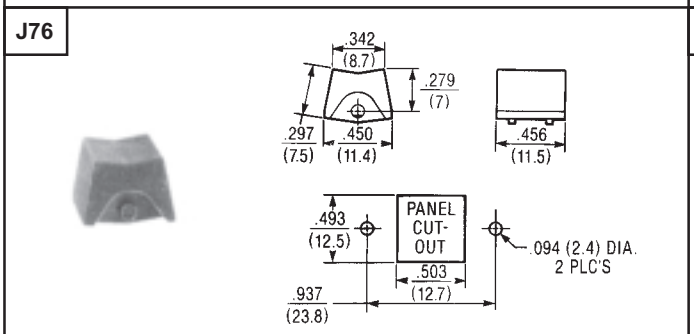

J77

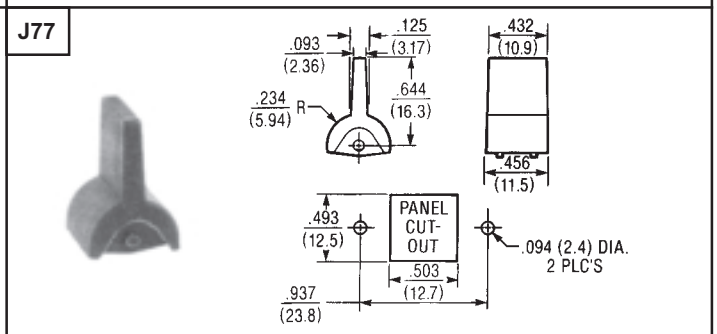

Washable Rocker & Paddle Switches

TERMINATION OPTIONS

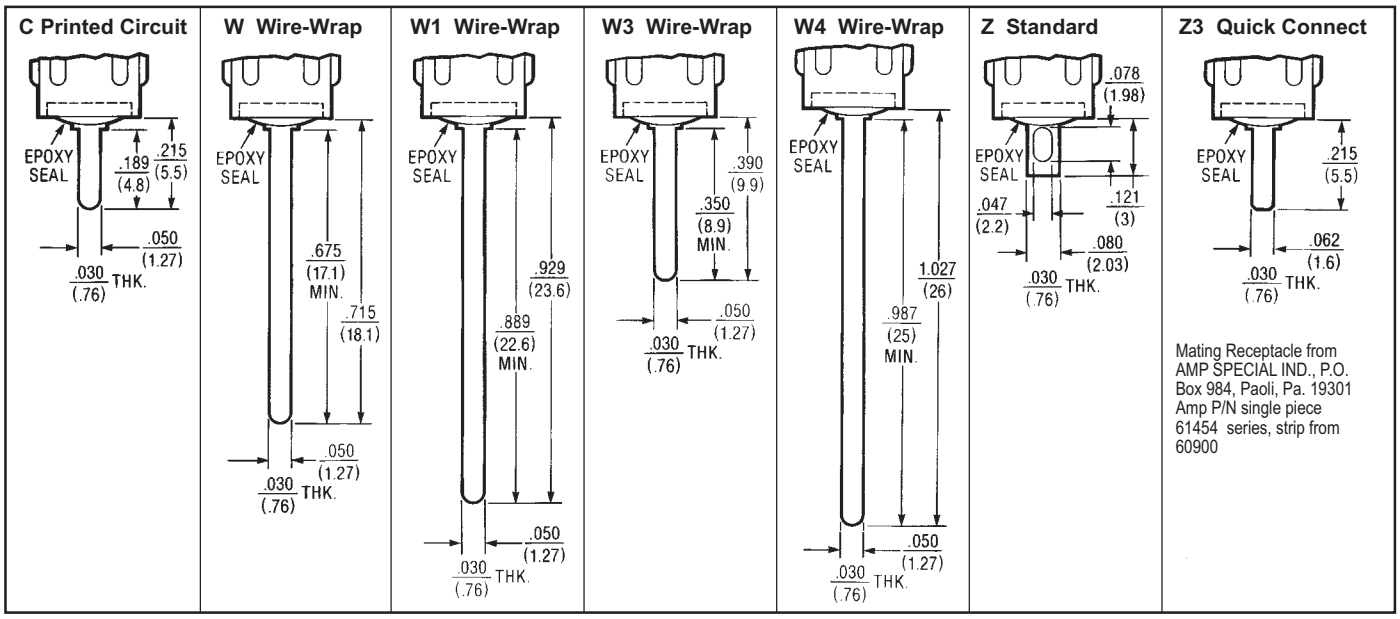

NOTE: Wire-Wrap is a registered trademark of the Gardner-Denver Company.

TERMINATION & MOUNTING OPTIONS

A

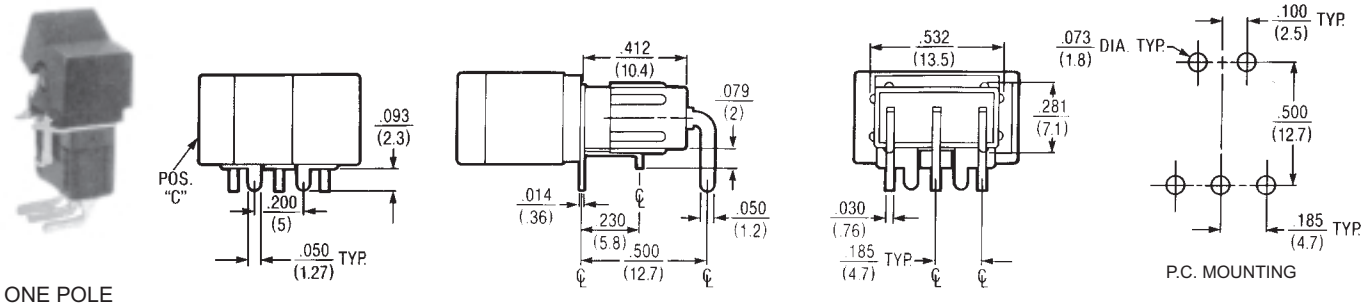

ONE POLE

A

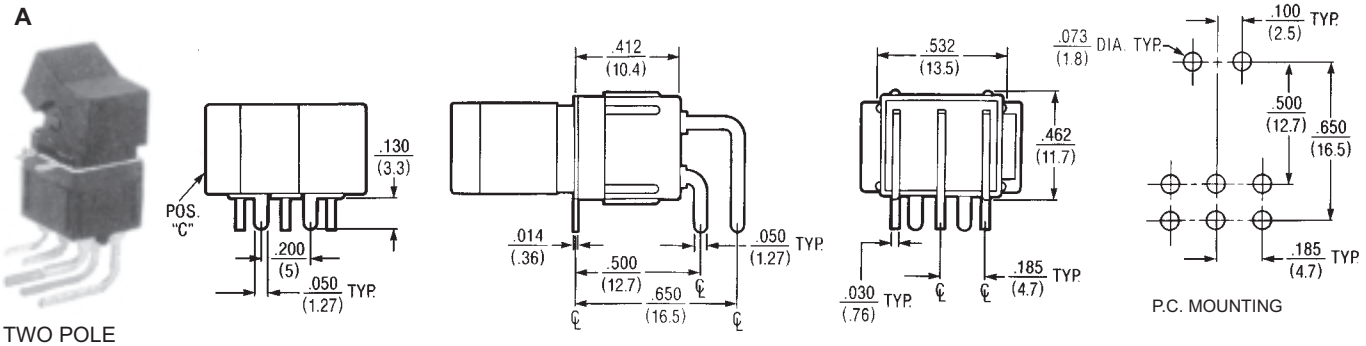

TWO POLE

TERMINATION & MOUNTING OPTIONS — Contd.

AV2

ONE POLE

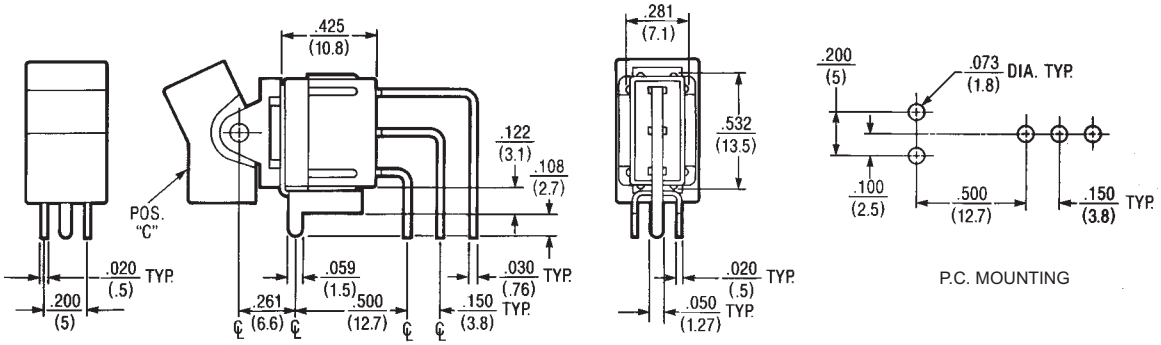

AV2

TWO POLE

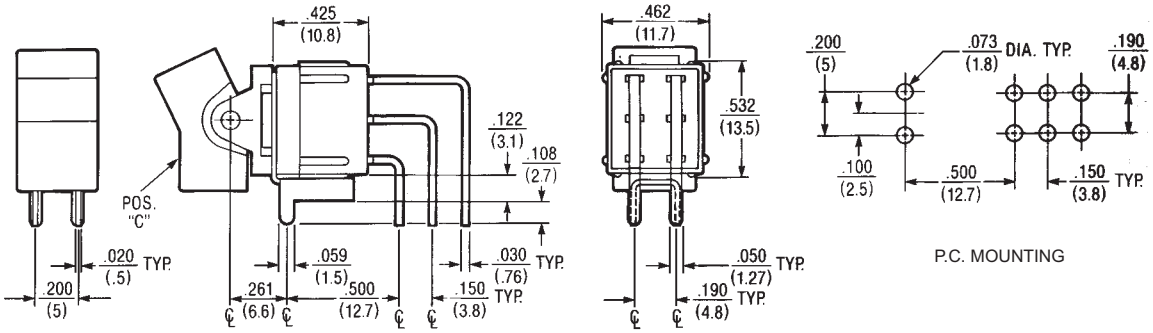

V3

ONE POLE

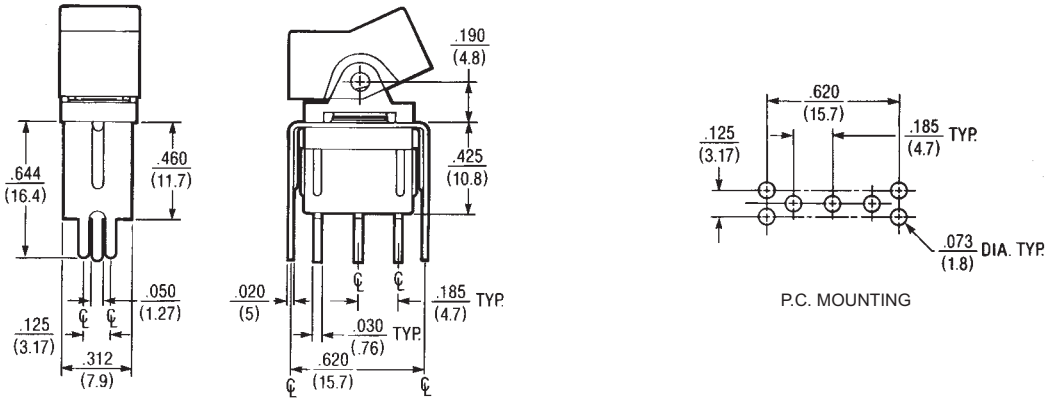

V3

TWO POLE

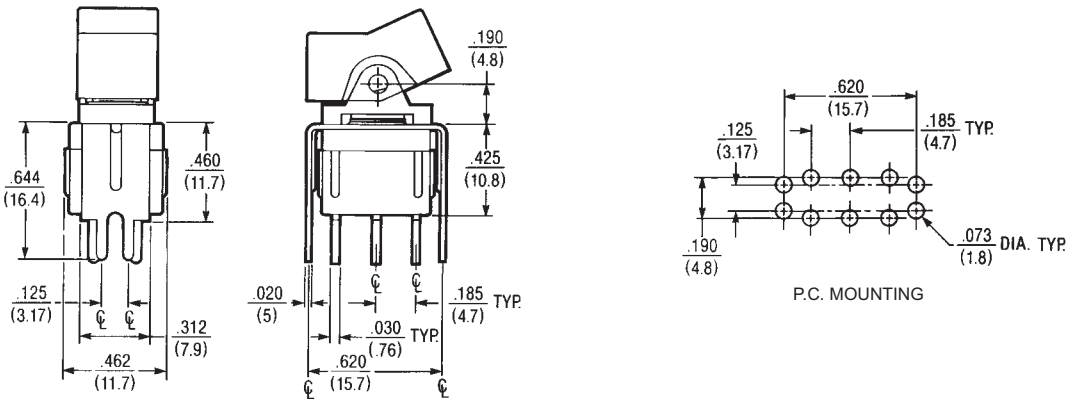

Sub-Miniature Rocker Switches for Printed Circuit Boards — Wave Solderable
Series RK8000 PCB Rocker Switches

SPECIFICATIONS

- Mechanical life – 500,000 operations minimum
- Contact resistance – 25 milliohms maximum
- Dielectric strength – 1000 VAC rms
- Ambient temperature range – -20°C to +70°C
- Weight – 0.06 ounces (1.7 grams)
- Electrical life – 100,000 operations minimum
- Red rocker supplied as standard. Various rocker colors are available. For information consult Electroswitch
- Contact material – Gold over nickel over silver over copper

CURRENT RATINGS

Type	Nominal Rating, Amperes			
	6V dc	12V dc	28V dc	125V ac
RK8001-RK8007	1	1	0.5	0.5

NOTE: For special .5 VA max. rating @ 28 VAC or DC contact Electroswitch.

Gold-plated shorting bar and terminals provide over 500,000 cycles low level current/ voltage operation

Drain holes permit complete flux wash-down

Simple 2-piece spring/cam-block mechanism results in long mechanical life

SELECTION TABLE

(**Bold** Face Type indicates items normally in Distributor Stock)

Circuit With Lever In			Poles & Throw	No. Of Positions	Catalog No. P.C. Terminals 0.130" (3.30 mm) Long
Position A	Position B	Position C			
ON	NONE	ON		2	RK8001
ON	NONE	ON*		2	RK8002
ON*	NONE	ON		2	RK8003
ON	OFF	ON*	2 Circ.	3	RK8004
ON*	OFF	ON		3	RK8005
ON	OFF	ON		3	RK8006
ON*	OFF	ON*		3	RK8007

* Momentary Contact

APPROXIMATE DIMENSIONS

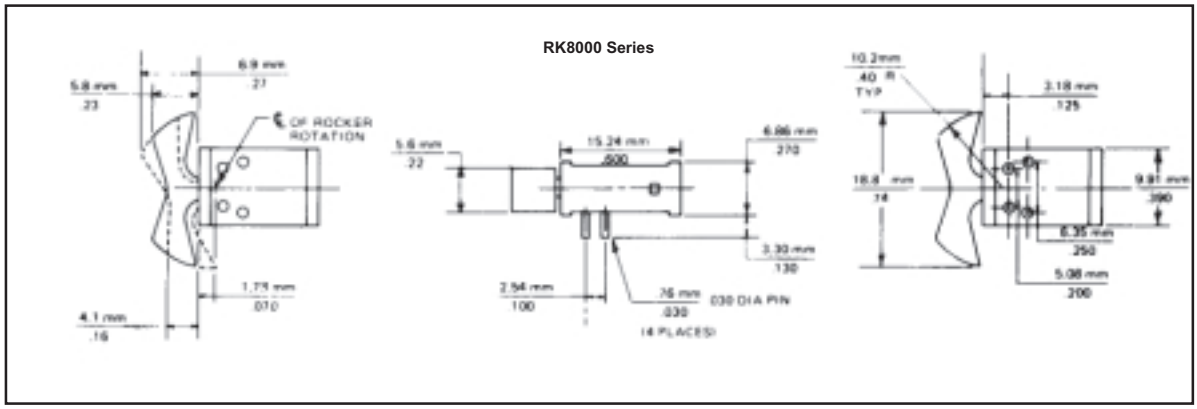

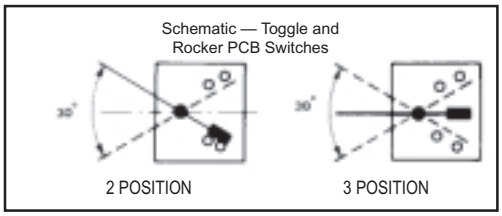

CAUTION — MANUAL SWITCHES ARE AFFECTED BY HEAT, CLEANING SOLVENTS AND FLUX. EXTREME CARE SHOULD BE EXERCISED DURING HAND SOLDERING AND WAVE SOLDERING TO PREVENT SWITCH CONTAMINATION.

Ordering Table — Standard Toggle Switches

HOW TO ORDER YOUR DESIGN (**Bold** Face Type indicates items normally in Distributor Stock)

Following the table from left to right, the designer is able to specify the options wanted. The options are described and illustrated on pages 24-31. Refer to page 57 for mounting hardware.

To determine a part number select the options desired and fill in the boxes in the selection guides illustrated below.

Toggle Switch Selection Guide

Toggle Switch Series [ ] + Poles and Throw [ ] + Circuit [ ][ ] + Lever Options [ ][ ] + Lever Finish [ ] + Bushing Options [ ][ ] + Terminal Type [ ][ ][ ] + Contact Material [ ][ ] + Other [ ]

Series	Poles and Throw		Circuits ❿				Lever Options and Finishes				Bushing Options		Terminal Options ❼		Contact Material		Other Option	
	No.	Code	Keyway			Code	Type	Code	Finish	Code	Type	Code	Type	Code	Type	Code	Type	Code
A	SPDT	1			POS. "C"		Lever Lock K Bushing Only	K1	Bright Chrome ⓮	1	Splashproof Lever ❸ & Bushing Seal	CW	Right Angle PC ⓫	A	Gold/Nickel/Brass	B	Epoxy Sealed ❼ Terminals	
	DPDT	2	ON	OFF	ON	21	.840 Bat	L0	Stain Chrome	2	Splashproof ❸ Lever Seal Only	CX	Vertical PC .100 Spacing	AV	Gold/Nickel/Silver	G	Anti-Rotation Anti-Jam Bushing ❹	P
	3PDT	3	ON	NONE	ON	23	.640 Bat	L1	Black ❶	3	.280 Threaded ❷	D	Vertical PC .150 Spacing	AV2	Coin Silver	Q		
	4PDT	4	ON	NONE	ON*	26	.550 Bat	L2	Black Nylon ❽	4	.280 Smooth ❷	D9	Printed Circuit Terminals	C	⓯	K		
			ON*	OFF	ON*	27	Long Mod Cap	L3	Red Nylon ❽	5	.350 Flatted With Shoulder	H	Right Angle ❾ Same Throw	R	⓯	L		
			ON	OFF	ON*	31	Short Mod Cap	L4	White Nylon ❽	6	.350 Keyway With Shoulder	H3	Right Angle ❾ Opposite Throw	R2	⓯	M		
			ON	ON	ON	32	.200 Bat	M			Locking K1 Lever Only	K	PC & Support ❻	V30				
			ON	ON	ON*	33	.840 Flat	P1			15/32 Dia. ⓬	T	PC & Support ❻	V40				
			NONE	ON	ON*	34 ❺	.450 Flat	P3			Splashproof Lever ⓬ 15/32 & Panel Seal	TW	PC & Support ❻	V60				
			ON*	ON	ON*	35	.250 Flat	P4			15/32 Splashproof ⓬ Lever Seal Only	TX	PC & Support ❻	V70				
			NONE	ON	ON	53 ❺	.410 Bat	S			.350 Threaded	Y	.750 Wire Wrap	W				
							.468 Large ⓭	T1			.437 Threaded (With P3 Only)	Y5	.964 Wire Wrap	W1				
							.687 Large ⓭	T			.350 Smooth	Y9	.425 Wire Wrap	W3				
													1.062 Wire Wrap	W4				
													Solder Lugs	Z				
													Quick Connect	Z3				

*Momentary Contact
❶ Available on S, M and P3 only.
❷ Add .070 to lever length when using these bushings.
❸ Available with S, M, L0, L1, L2, L3, L4 lever options. Consult factory for availability.
❹ Standard on P1, P3, P4 and K1 lever options. Available on all other levers except T & T1.
❺ These circuits are **NOT** available with the following 3 and 4 pole options: A, AV, AV2, V30, V40, V60 and V70.
❻ 1 and 2 pole only.
❼ Epoxy seal standard on all terminal options.
❽ Available only with L3 and L4 levers.
❾ Available in 1 pole only.
❿ See page 58 for construction detail, wiring and electrical diagrams.
⓫ 1, 2 and 3 pole only.
⓬ Available on T or T1 lever options only.
⓭ Available on T, TW, and TX bushing options. (Bright chrome only.)
⓮ Not available on K1 lever.
⓯ Same as B, G and Q respectively except terminals brass with tin nickel alloy over nickel plate. Consult plant for availability.

EXAMPLES:

A232L01YW1B = DPDT toggle switch with an ON-ON-ON circuit, .840" long lever in a bright chrome finish, .350 threaded bushing, .964" long wire wrap terminals, gold/brass contacts and epoxy sealed terminals.

SPECIFICATIONS:

Contact Ratings —
Letter codes G and Q — 6 amp at 125 VAC, 3 amp @ 250 VAC (U.L. recognized, CSA certified) or 6 amp at 28 VDC resistive.
Letter codes B and G – 0.5. volt-amp (VA) maximum @ 28 V maximum (AC or DC).

Life Under Load — 60,000 make-and-break cycles — resistive load only.

Initial Contact Resistance — 10 milliohms maximum 3 VDC, 100 ma for both silver and gold plated contacts.

Insulation Resistance — 1 & 2 pole —1,000 megohms, min.
3 & 4 pole —1,000 megohms, min.

Dielectric Strength — 1,000 volts rms at sea level.

Bushing Strength — 12 pound-inches without physical damage to switch.

Weight (including hardware) — SP 0.19 oz.; DP 0.23 oz.; 3-pole 0.28 oz.; 4-pole 0.32 oz.

MATERIALS:

Base (body) — 1- and 2-pole —Diallyl Phthalate (DAP).
3- and 4-pole — high strength phenolic.

Lever (toggle) — Brass, chrome plated.

Flat Lever — Brass, satin chrome finish.

Locking lever cap — Anodized aluminum.

Bushing — Brass, nickel plated.

Clamp (frame) — Stainless steel.

Support brackets — Steel, tin plated.

Switching Contacts and Rockers —
Letter Code B — gold/nickel/brass
Letter Code G — gold/nickel/silver
Letter Code Q — Coin silver

Center Terminal
Letter Codes B, G — Gold flash/nickel/brass
Letter Code Q — Silver plated brass.

Hardware — See page 55-57.

Toggle Switches — Base Dimensions and Lever Options

APPROXIMATE BASE DIMENSIONS

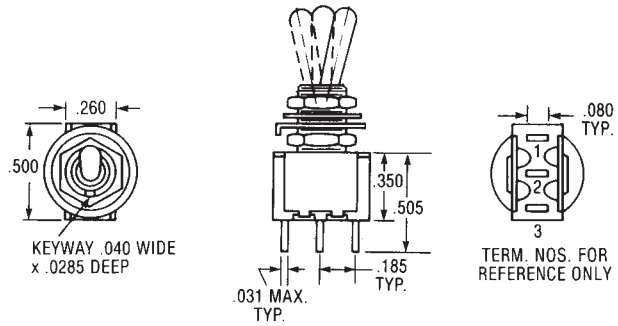

ONE POLE

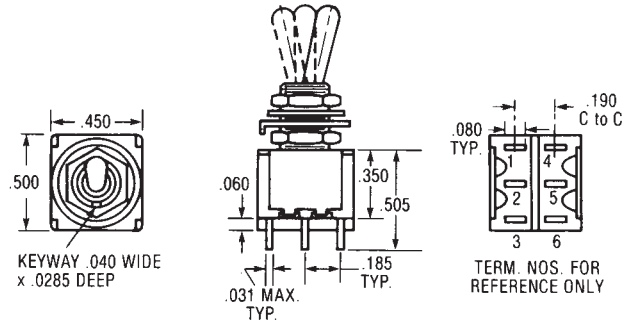

TWO POLE

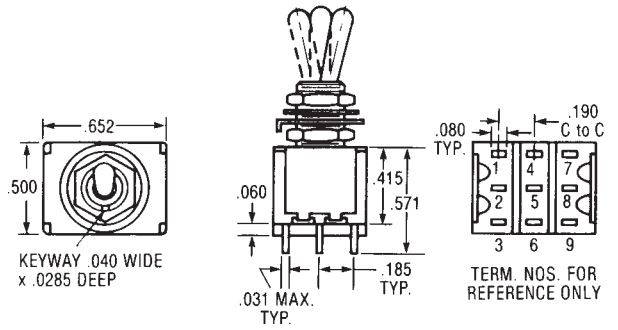

THREE POLE

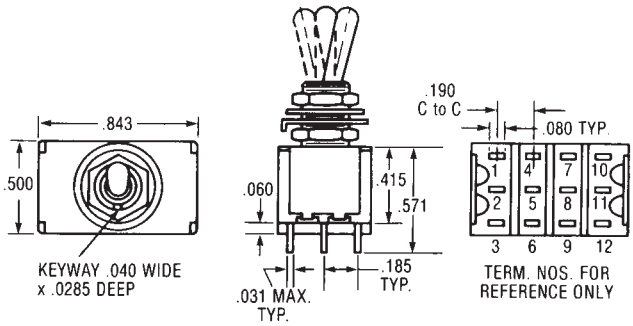

FOUR POLE

TOGGLE LEVER OPTIONS

K1 Locking Lever

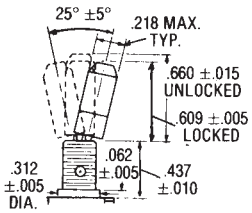

L0 Long (.840")

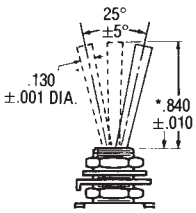

L1 Long (.640")

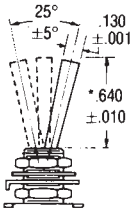

L2 Long (.550")

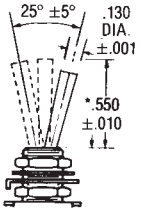

L3 Plastic (.840")

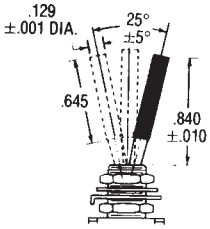

L4 Plastic (.571")

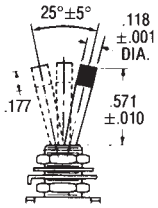

Toggle Lever Options — Contd.

M Short (.200")

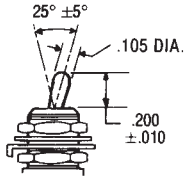

P1 Flatted (.840")

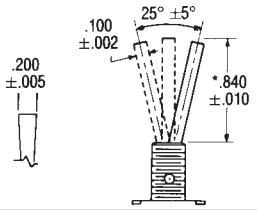

P3 Flatted (.448")

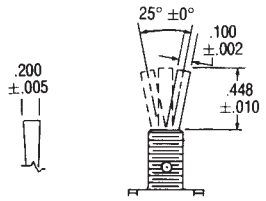

P4 Flatted (.250")

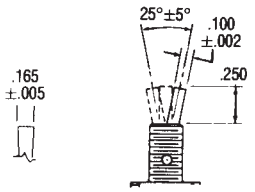

S Std. Bat (.410")

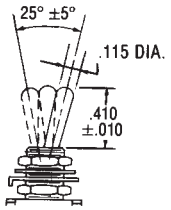

T Large Toggle

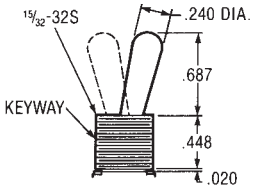

T1 Large Toggle

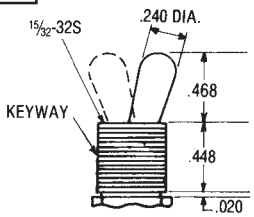

BUSHING OPTIONS

CW Splashproof Sealed Lever and Panel Seal

CW = Flatted bushing

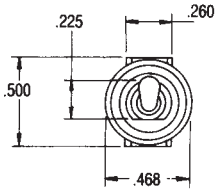

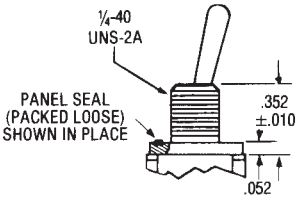

D
D9
Threaded
Smooth
(No Keyway)

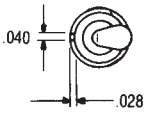

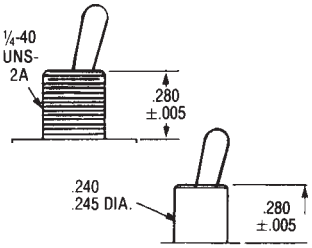

H High Torque Flatted with Shoulder

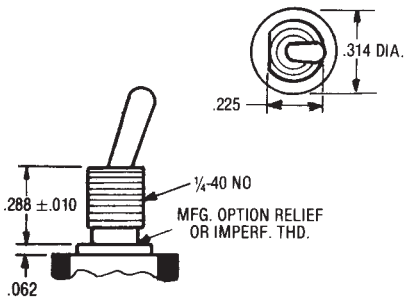

H3 High Torque

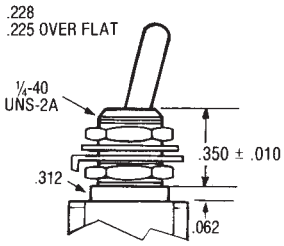

P Anti-Rotation

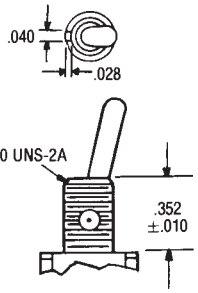

TW Splashproof Sealed Lever and Panel Seal

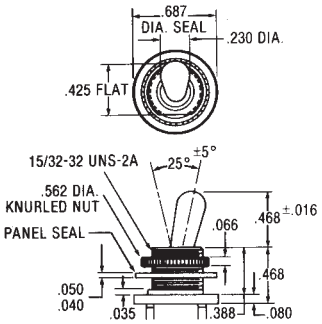

OX
Y
Y9
Threaded with Lever Seal
Threaded
Smooth (No Keyway)

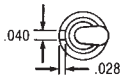

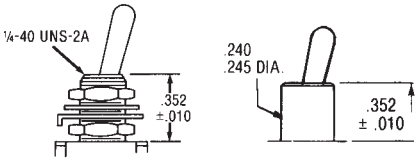

Y5 Long Bushing (.437")

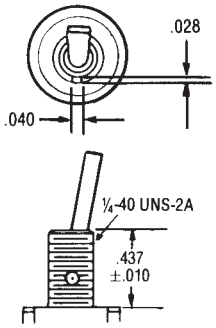

K Refer to K1 lever drawing for dimensions.

T&TX Refer to T or T1 lever drawing for dimensions.

Note: For hardware refer to pages 55-57.

Termination Options

C Printed CIRCUIT	W Wire-Wrap	W1 Wire-Wrap	W3 Wire-Wrap	W4 Wire-Wrap	Z STANDARD	Z3 Quick CONNECT
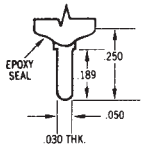	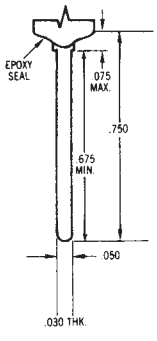	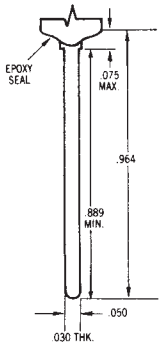	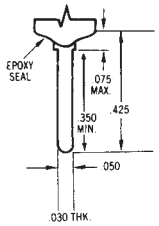	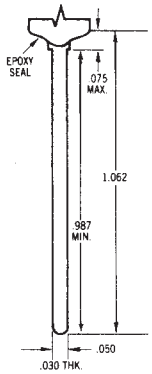	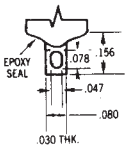	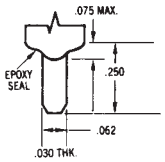

NOTE: Wire-Wrap is a registered trademark of the Gardner-Denver Company.

Mating Receptacle from AMP SPECIAL IND., P.O. Box 984, Paoli, Pa. 19301 Amp P/N single piece 61454 series, strip from 60900

TERMINATION/MOUNTING OPTIONS

A

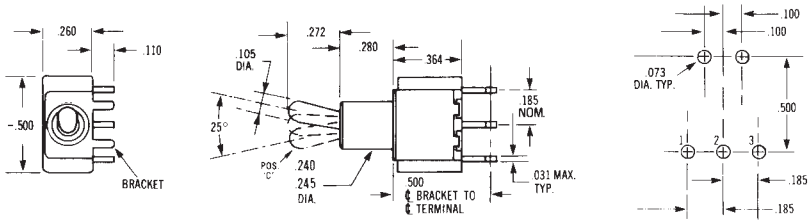

One Pole

A

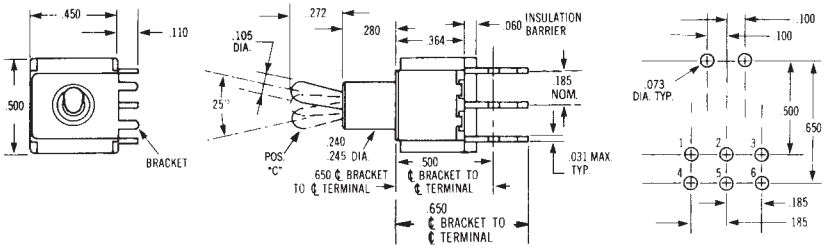

Two Pole

Right Angle P.C. Terminal

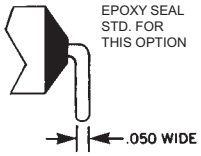

A

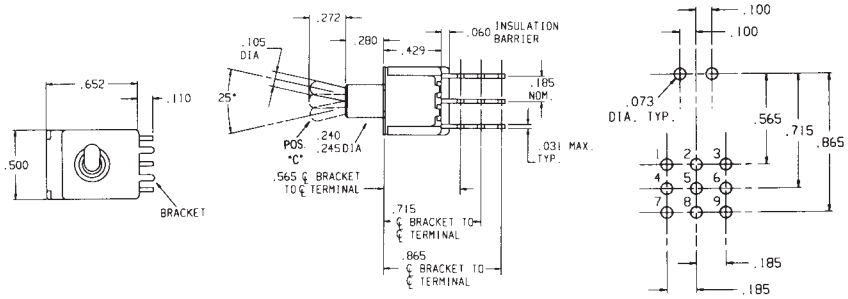

Three Pole

R

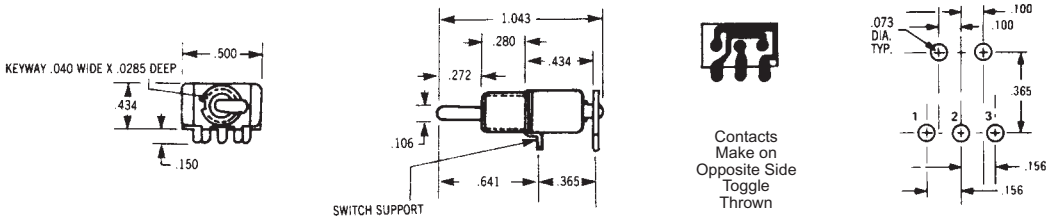

One Pole

R2

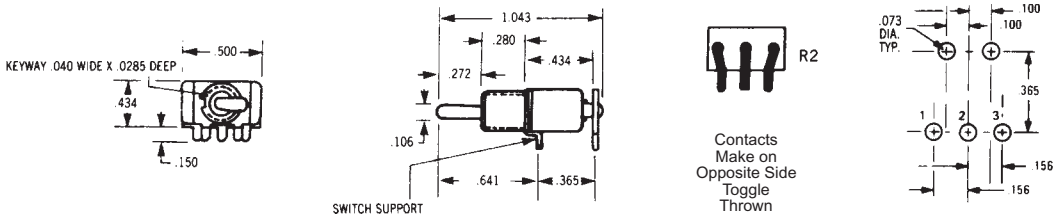

One Pole

Termination/Mounting Options

AV1	w/.100" terminal spacing
AV2	w/.150" terminal spacing (pictured below)

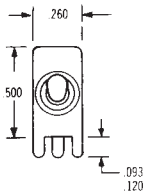

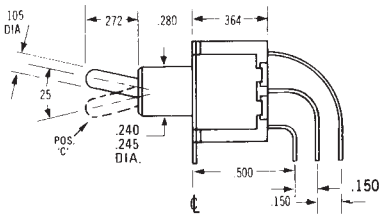

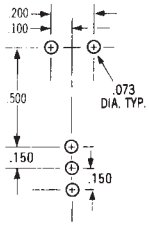

ONE POLE Epoxy sealed P.C. terminals are supplied as standard for these options.

AV1	w/.100" terminal spacing
AV2	w/.150" terminal spacing (pictured below)

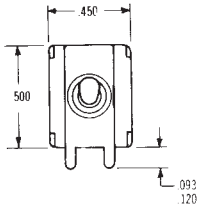

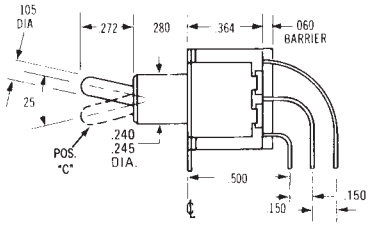

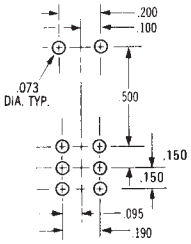

TWO POLE Epoxy sealed P.C. terminals are supplied as standard for these options.

AV	w/.100" terminal spacing
AV2	w/.150" terminal spacing (pictured below)

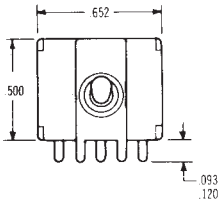

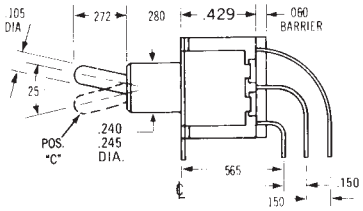

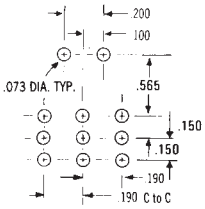

THREE POLE Epoxy sealed P.C. terminals are supplied as standard for these options.

AV	w/.100" terminal spacing
AV2	w/.150" terminal spacing (pictured below)

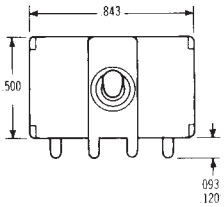

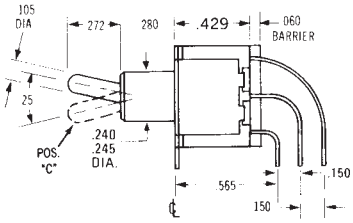

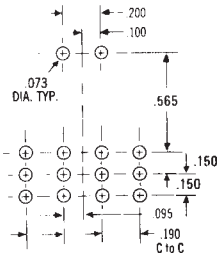

FOUR POLE Epoxy sealed P.C. terminals are supplied as standard for these options.

V30

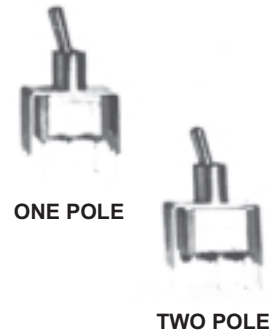

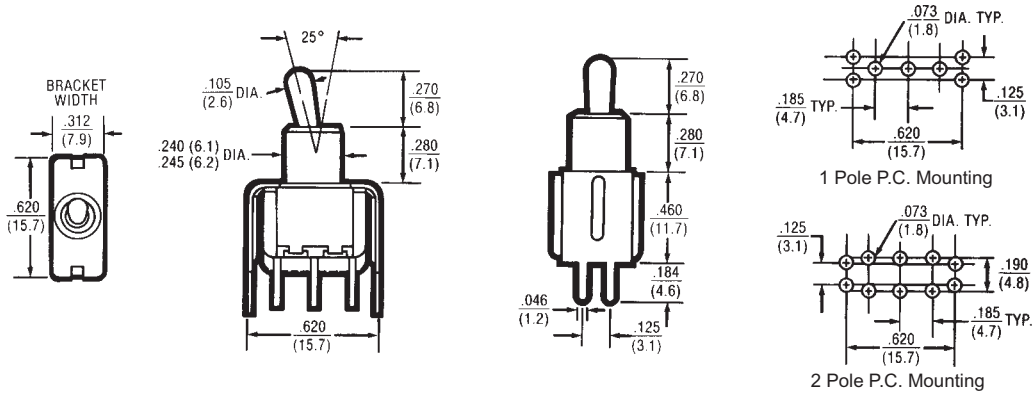

EPOXY SEALED P.C. TERMINALS ARE SUPPLIED AS STANDARD FOR THESE OPTIONS

V40

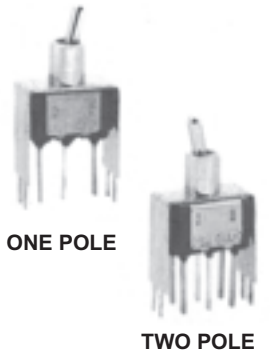

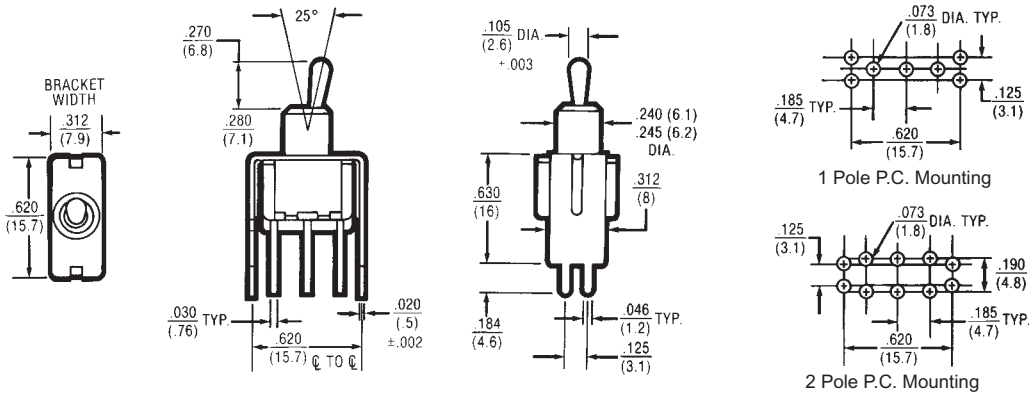

EPOXY SEALED P.C. TERMINALS ARE SUPPLIED AS STANDARD FOR THESE OPTIONS

V60

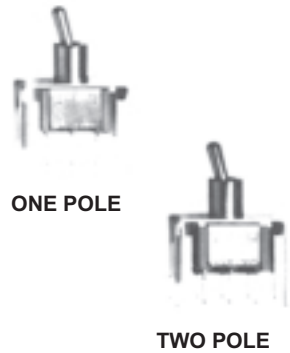

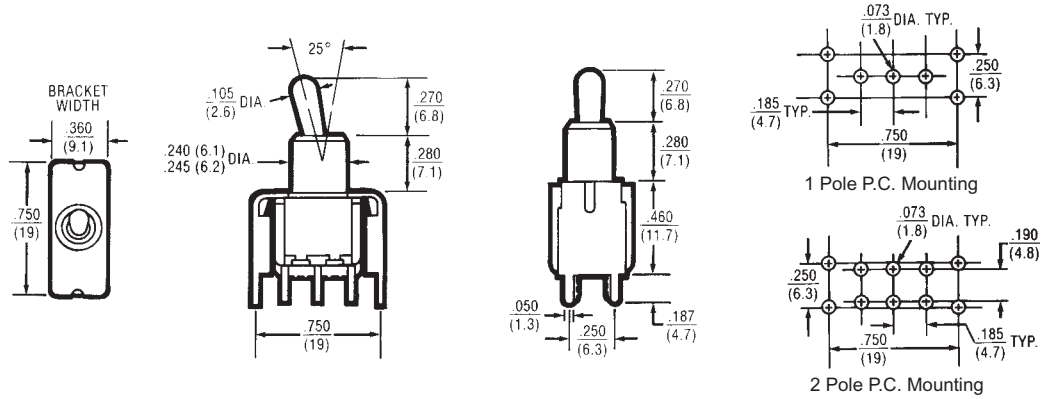

EPOXY SEALED P.C. TERMINALS ARE SUPPLIED AS STANDARD FOR THESE OPTIONS

V70

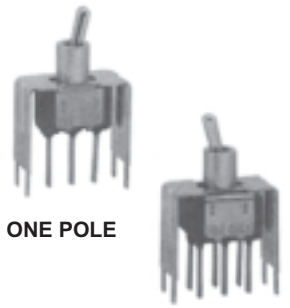

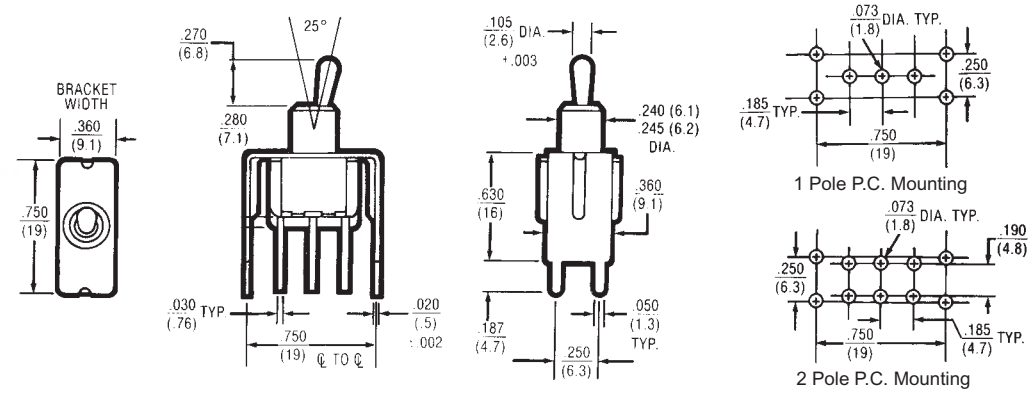

EPOXY SEALED P.C. TERMINALS ARE SUPPLIED AS STANDARD FOR THESE OPTIONS

Ordering Table — Washable Toggle Switches

Designed to be wave soldered along with other Printed Circuit Board Components and withstand associated cleaning processes.

HOW TO ORDER YOUR DESIGN (**Bold** Face Type indicates items normally in Distributor Stock)

Following the table from left to right, the designer is able to specify the options wanted. The options are described and illustrated on The following pages.

To determine a part number select the options desired and fill in the boxes in the selection guides illustrated below.

WashableToggle Switch Selection Guide

Toggle Series + Poles and Throw + Circuit + Lever Options + Lever Finish + Bushing Options + Terminal Type + Contact Material

Series		Poles and Throw		Circuits ❻				Lever Options and Finishes				Bushing Options		Terminal Options		Contact Material	
Type	Code	No.	Code	Keyway			Code	Type	Code	Finish	Code	Type	Code	Type	Code	Type	Code
Toggle	WT	SPDT	1			POS. "C"		.940 BAT.	L0	Bright Chrome	1	.250 Smooth	D1	Right Angle PC	A	Gold/Brass	B
		DPDT	2	ON	OFF	ON	21	.740 BAT.	L1	Black ❸	3	.280 Smooth	D9 ❷	Vertical PC .150 Spacing	AV2	Gold/Silver	G
				ON	NONE	ON	23	.650 BAT.	L2	Black Nylon ❹	4	.350 ❺ Threaded	Y ❼	PC Terminals	C	Coin/Silver	Q
				ON	NONE	ON*	26	Long Mod Cap	L3	Red Nylon ❹	5	.350 ❺ Smooth	Y9	PC & Support	V30	❽	K
				ON*	OFF	ON*	27	Short Mod Cap	L4	White Nylon ❹	6			.750 Wire Wrap	W	❽	L
				ON	OFF	ON*	31	.510 BAT.	S					.964 Wire Wrap	W1	❽	M
				ON	ON	ON	32 ❶	.300 BAT.	M					.425 Wire Wrap	W3		
				ON	ON	ON*	33 ❶							1.062 Wire Wrap	W4		
				ON*	ON	ON*	35 ❶							Solder Lug	Z		
														Quick Connect	Z3		

*Momentary Contact
❶ 2 Pole Only.
❷ Subtract .030 from lever length when using this bushing.
❸ Available on S and M lever options only.
❹ Available only with L3 and L4 lever options only.
❺ Subtract .100 from lever length when using these bushings.
❻ Refer to page 59 for construction detail, wiring and electrical diagrams.
❼ Not available on A, AV2, V30 terminal options.
❽ Same as B, G and Q respectively except terminals brass with tin nickel alloy over nickel plate. Consult plant for availability.

EXAMPLES:

WT123M1D9AB = SPDT toggle switch with an ON-NONE-ON circuit, .270" long lever (see note 2 above) with a bright chrome finish, .280" smooth bushing right angle P.C. terminals with gold/brass contacts.

WT232S1D1V30G = DPDT toggle switch with an ON-ON-ON circuit, .510" long lever with a bright chrome finish, .250" smooth bushing, P.C. terminals with support bracket and gold/silver contacts.

SPECIFICATIONS:

Contact Ratings —
Letter codes G and Q — 6 amp at 125 VAC, 3 amp @ 250 VAC (U.L. recognized, CSA certified) or 6 amp at 28 VDC resistive.
Letter codes B and G – 0.5 volt amp (VA) maximum @ 28 V maximum (AC or DC).

Life Under Load — 60,000 make-and-break cycles — resistive load only.

Initial Contact Resistance — 10 milliohms maximum 3 VDC, 100 ma for both silver and gold plated contacts.

Insulation Resistance — 1,000 megohms, min.

Dielectric Strength — 1,000 volts rms at sea level.

Operating Temperature — -30 degrees C to 65 degrees C.

MATERIALS:

Base & Bushing — Thermoplastic high temperature (UL 94V-O).

Lever (toggle) — Brass, chrome plated.

Support brackets — Brass or steel tin plated.

Switching Contacts and Rockers —
Letter Code B — gold/nickel/brass
Letter Code G — gold/nickel/silver
Letter Code Q — Coin silver

Center Terminal
Letter Codes B and G — Gold flash/nickel/brass
Letter Code Q — Silver plated brass.

Hardware — See pages 55-57.

Washable Toggle Switches — Base Dimensions and Lever Options

APPROXIMATE BASE DIMENSIONS

ONE POLE

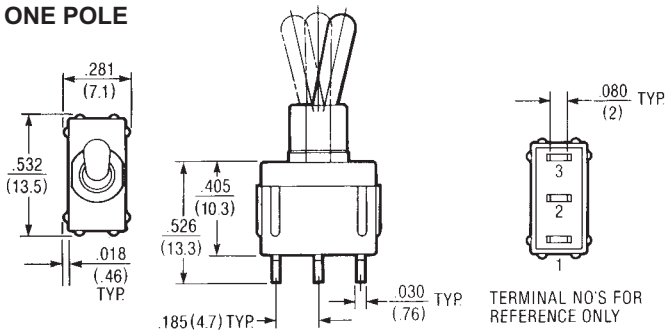

TWO POLE

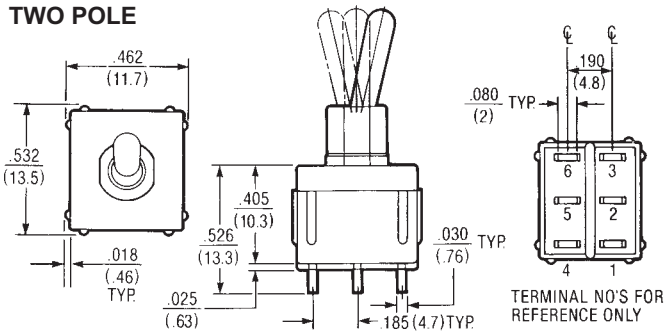

TOGGLE LEVER OPTIONS

S Std. Bat. (.510")

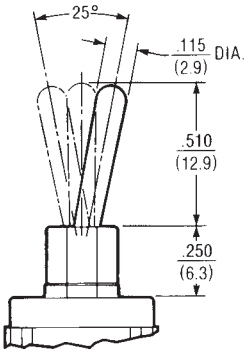

M Short (.300")

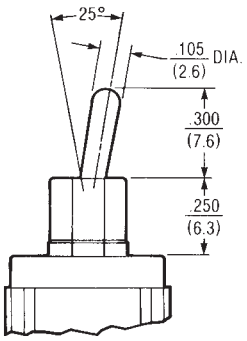

L0 Long (.940")

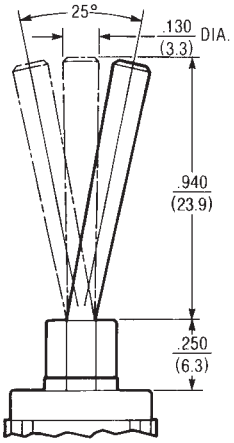

L1 Long (.740")

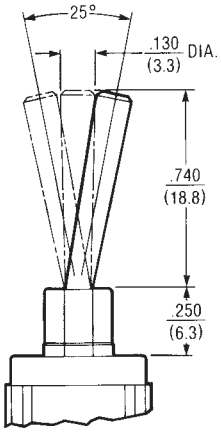

L2 Long (.650")

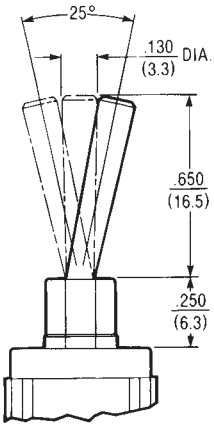

L3 Plastic (.940")

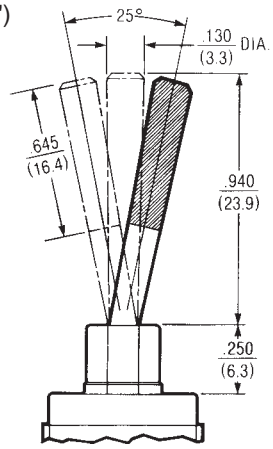

L4 Plastic (.671")

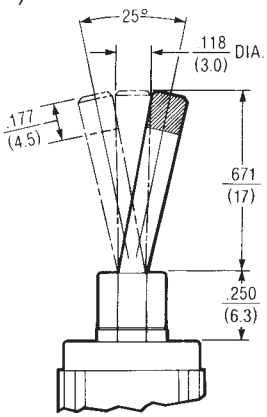

BUSHING OPTIONS

D1 Standard (.250") Smooth

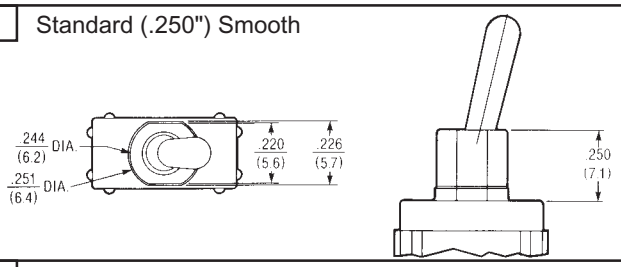

D9 (.280") Smooth

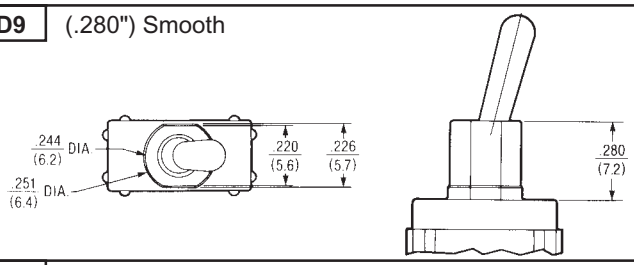

Y (.350") Threaded

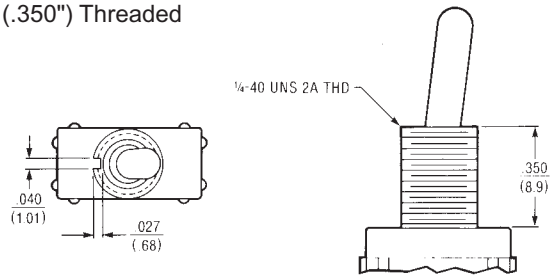

Y9 (.350") Smooth

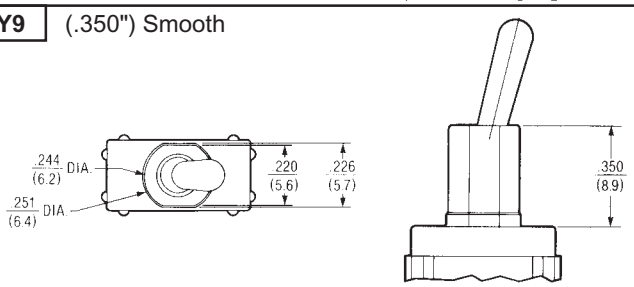

TERMINATION OPTIONS

C Printed Circuit

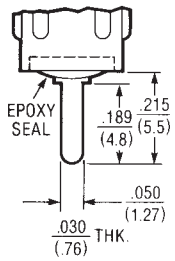

W Wire-Wrap

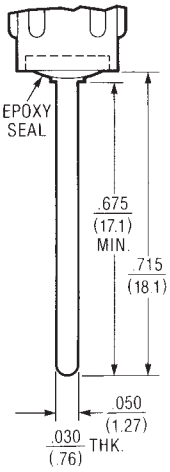

W1 Wire-Wrap

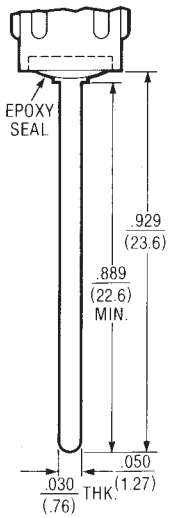

W3 Wire-Wrap

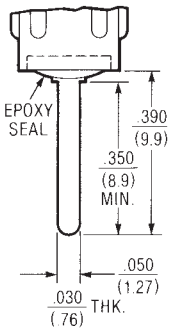

W4 Wire-Wrap

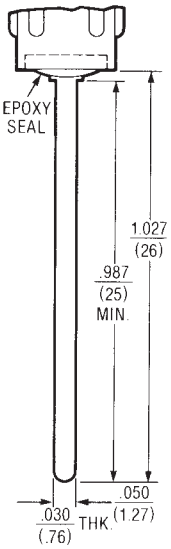

Z Standard

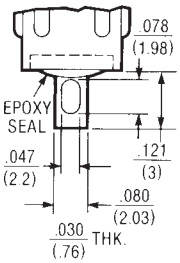

Z3 Quick Connect

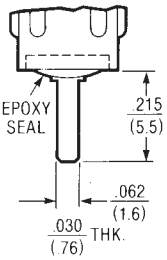

Mating Receptacle from AMP SPECIAL IND., P.O. Box 984, Paoli, Pa. 19301 Amp P/N single piece 61454 series, strip from 60900

NOTE: Wire-Wrap is a registered trademark of the Gardner-Denver Company.

TERMINATION & MOUNTING OPTIONS

A

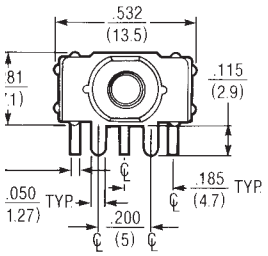

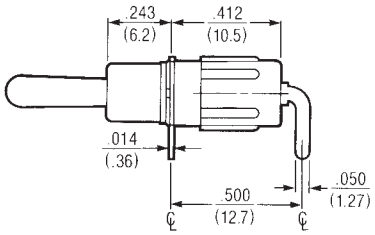

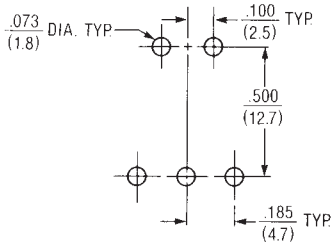

P.C. MOUNTING

ONE POLE

A

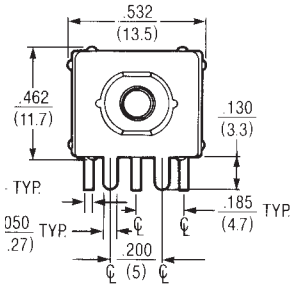

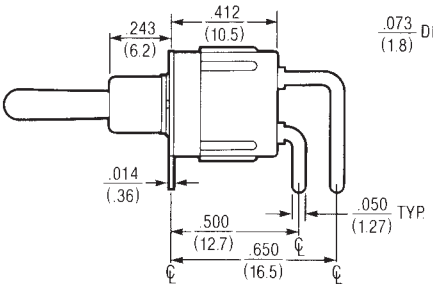

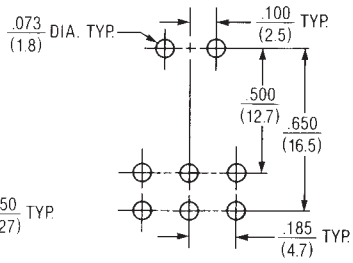

P.C. MOUNTING

TWO POLE

TERMINATION & MOUNTING OPTIONS — Contd.

AV2

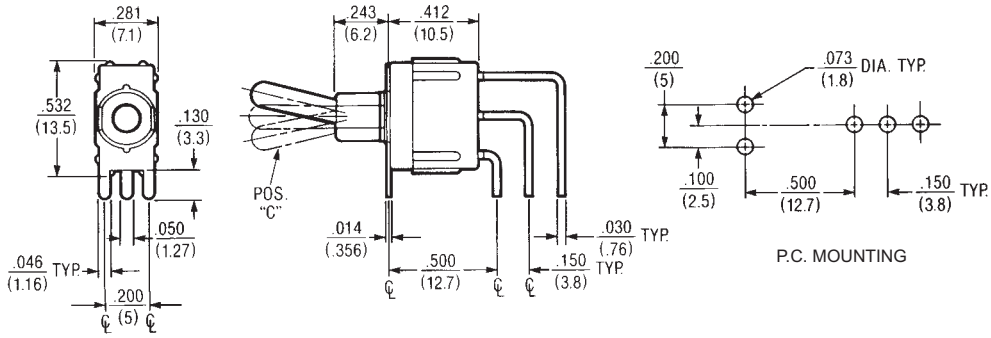

ONE POLE

AV2

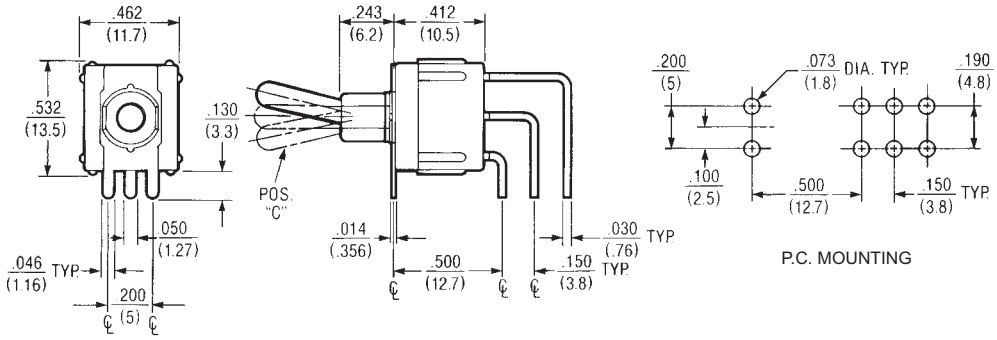

TWO POLE

V30

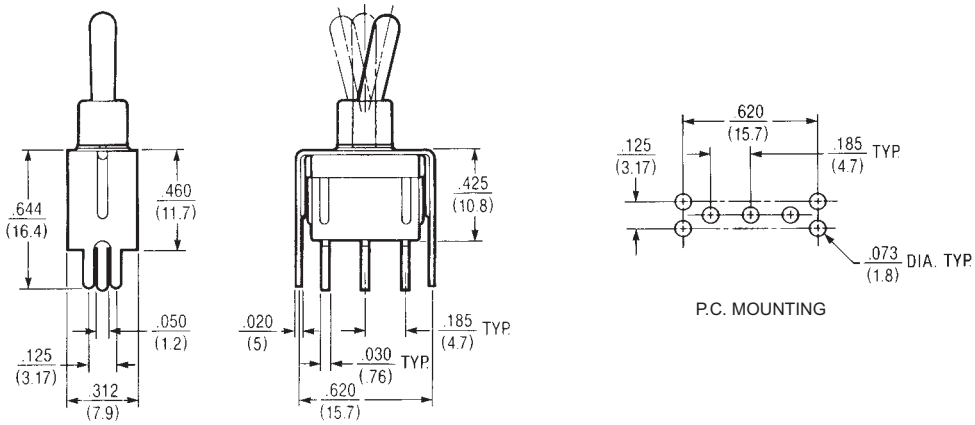

ONE POLE

V30

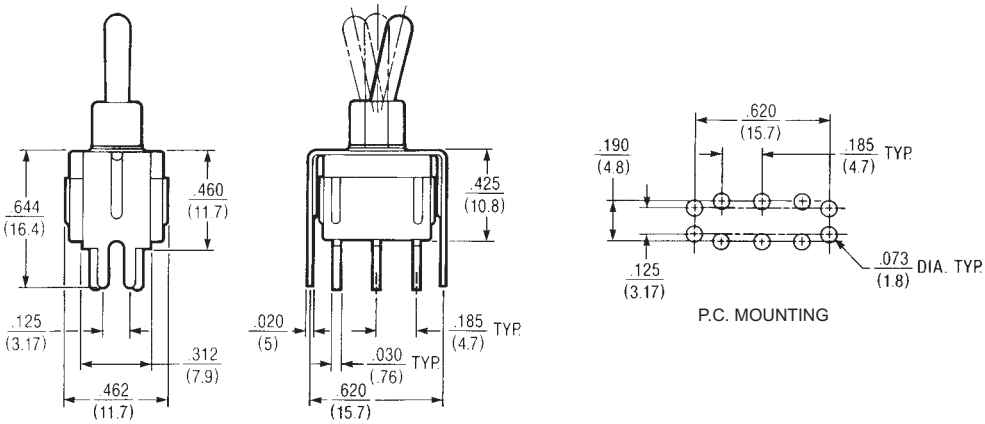

TWO POLE

Sub-Miniature Toggle Switches for Printed Circuit Boards — Wave Solderable Series T8000 PCB Toggle Switches

SPECIFICATIONS

- Mechanical life – 500,000 operations minimum
- Contact resistance – 25 milliohms maximum
- Dielectric strength – 1000 VAC rms
- Ambient temperature range – -20°C to +70°C
- Weight – 0.06 ounces (1.7 grams)
- Electrical life – 100,000 operations minimum
- Red nylon lever supplied as standard. Various colors are available. For information consult Electroswitch
- Contact material – Gold over nickel over silver over copper

CURRENT RATINGS

Type	Load	Nominal Rating, Amperes			
		6V dc	12V dc	28V dc	125V ac
T8101, T8201-T8207	Resistive	1	1	0.5	0.5

NOTE: For special .5 VA max. rating @ 28 VAC or DC contact Electroswitch.

SELECTION TABLE (**Bold** Face Type indicates items normally in Distributor Stock)

Circuit With Lever In ❶			Poles & Throw	No. Of Positions	Catalog Number By Terminal Length	
Position A	Position B	Position C			0.695" (17.65 mm)	0.130" (3.30 mm)
ON	NONE	ON	2 Circ.	2	T8101	T8201
ON	NONE	ON*		2	T8102	T8202
ON*	NONE	ON		2	T8103	T8203
ON	OFF	ON*		3	T8104	T8204
ON*	OFF	ON		3	T8105	T8205
ON	OFF	ON		3	T8106	T8206
ON*	OFF	ON*		3	T8107	T8207

* Momentary Contact

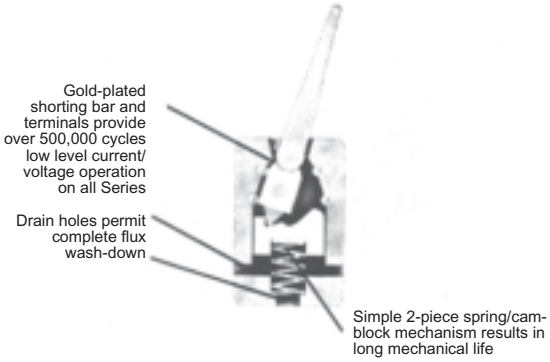

APPROXIMATE DIMENSIONS

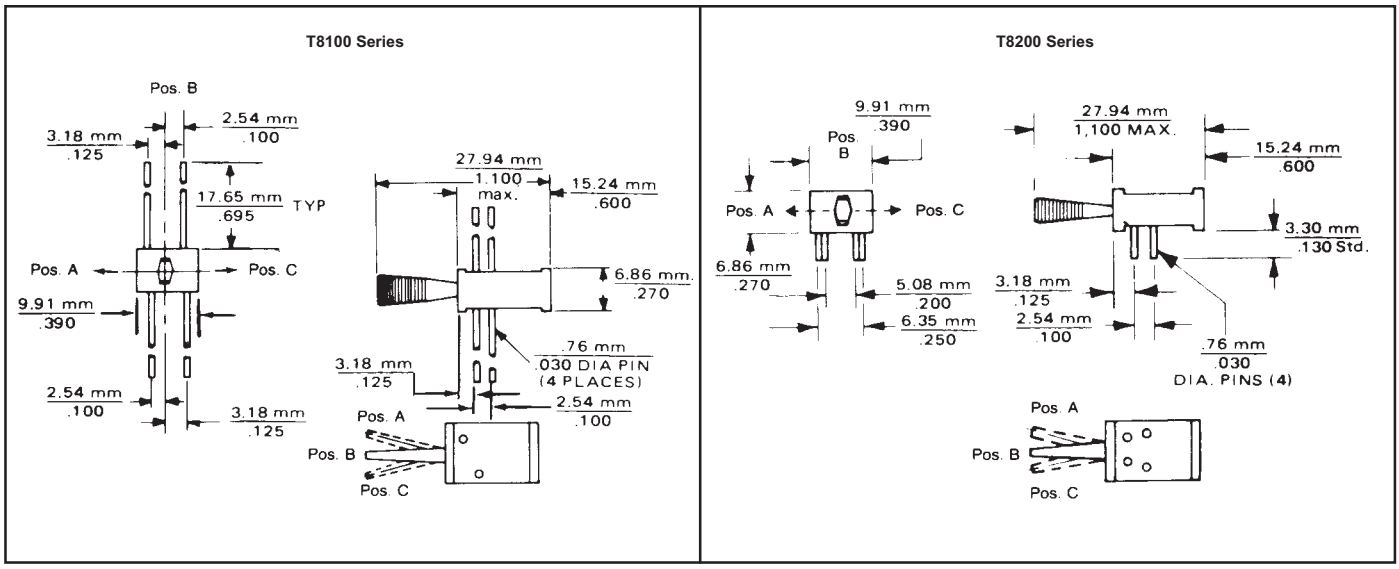

OPTIONS ❷

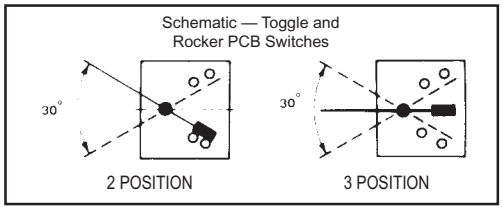

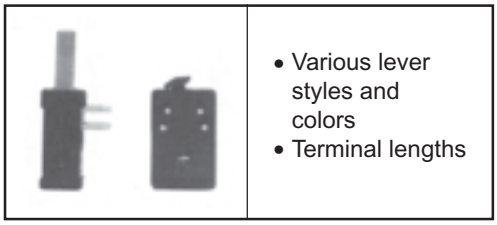

- Various lever styles and colors
- Terminal lengths

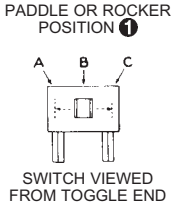

❷ For information on optional features consult Electroswitch.

CAUTION — MANUAL SWITCHES ARE AFFECTED BY HEAT, CLEANING SOLVENTS AND FLUX. EXTREME CARE SHOULD BE EXERCISED DURING HAND SOLDERING AND WAVE SOLDERING TO PREVENT SWITCH CONTAMINATION.

SPECIFICATIONS

- Originally designed to meet the requirements of MIL-S-83731 (see page 54 for Test Specifications).
- Sealed lever type with panel seal and terminal seal.
- Flatted bushing on sealed lever type.
- Solder lug or printed circuit terminals.
- Epoxy sealed terminals.
- One and two pole circuits.
- High electrical/mechanical reliability.
- Dry circuit current carrying ability.
- Toggle lever throw 25° ±5°.

MATERIAL

- **Base (body)** — Diallyl Phthalate.
- **Lever** — Brass, bright chrome plated.
- **Bushing** — Brass, nickel plated.
  Frame — Stainless steel.
- **Switching Contacts and Rockers** — 50 millionths gold over silver.
- **Center Terminal** — 50 millionths gold over silver.
- **Hardware** — Refer to hardware listing on page 57.

CURRENT RATINGS

Current Capacity in Amperes — Per Pole		
28 V DC	115 V AC 400 Hz	125 V AC 60 Hz
LAMP LOAD		
1	1	1
RESISTIVE LOAD		
5	5	5
INDUCTIVE LOAD		
2	2	2

LOGIC LEVEL

10 mA @ 5 V Max. (AC or DC)

SWITCH SELECTION TABLE — SEALED

Circuit With Lever			Catalog Number	
UP Position	CENTER Position	DOWN Position (Flat)	Solder Lug Terminals	Printed Circuit Terminals
ONE POLE				
ON	OFF	ON	A121S1CWZG-M8	A121S1CWCG-M8
ON	NONE	ON	A123S1CWZG-M8	A123S1CWCG-M8
ON	NONE	ON*	A126S1CWZG-M8	A126S1CWCG-M8
ON*	OFF	ON*	A127S1CWZG-M8	A127S1CWCG-M8
ON	OFF	ON*	A131S1CWZG-M8	A131S1CWCG-M8
NONE	ON	ON*	A137S1CWZG-M8	A137S1CWCG-M8
TWO POLE				
ON	OFF	ON	A221S1CWZG-M8	A221S1CWCG-M8
ON	NONE	ON	A223S1CWZG-M8	A223S1CWCG-M8
ON	NONE	ON*	A226S1CWZG-M8	A226S1CWCG-M8
ON*	OFF	ON*	A227S1CWZG-M8	A227S1CWCG-M8
ON	OFF	ON*	A231S1CWZG-M8	A231S1CWCG-M8
ON	ON	ON	A232S1CWZG-M8	A232S1CWCG-M8
ON	ON	ON*	A233S1CWZG-M8	A233S1CWCG-M8
NONE	ON	ON*	A234S1CWZG-M8	A234S1CWCG-M8
ON*	ON	ON*	A235S1CWZG-M8	A235S1CWCG-M8

* Momentary Contact

"ON-ON-ON" CIRCUIT DIAGRAM

No. of Poles	Up Position	Center Maintained Position	Down Position (Keyway)
2	1 2 3 / 4 5 6	1 2 3 / 4 5 6	1 2 3 / 4 5 6

APPROXIMATE DIMENSIONS

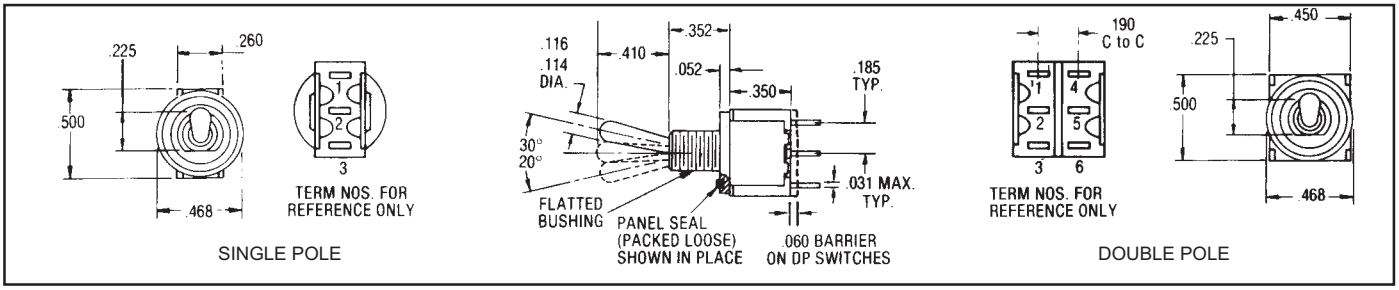

TERMINAL DIMENSIONS

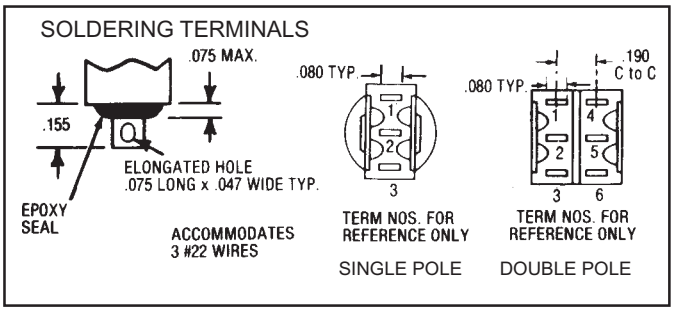

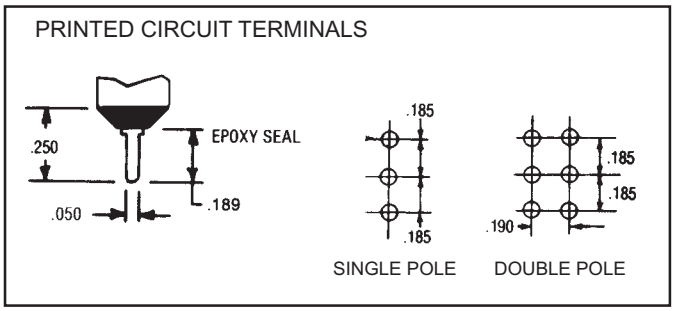

Commercial Miniature Leverlock Toggle Switches — Unsealed

SPECIFICATIONS

- One hole mounting.
- Originally designed to meet the requirements of MIL-S-83731 (see page 54 for Test Specifications).
- Slow make, slow break contact action.
- High electrical/mechanical reliability.
- Toggle lever throw 25° ±5°.
- Solder lug or printed circuit terminals.
- One and two pole circuits.
- Dry circuit current carrying ability.
- Mounting hardware furnished unassembled

MATERIAL

- **Base (body)** — Diallyl Phthalate.
- **Locking lever** — Brass, nickel plated. **Cap** — natural adnodized aluminum supplied as standard; other colors such as red, blue, gold, black and green are also available.
- **Bushing** — Brass, nickel plated. **Frame** — Stainless steel.
- **Switching Contacts and Rockers** — 50 millionths gold over silver.
- **Center Terminal** — 50 millionths gold over silver.
- **Hardware** — Refer to hardware listing on page 57.

CURRENT RATINGS

Current Capacity in Amperes — Per Pole		
28 V DC	115 V AC 400 Hz	125 V AC 60 Hz
LAMP LOAD		
1	1	1
RESISTIVE LOAD		
5	5	5
INDUCTIVE LOAD		
2	2	2

LOGIC LEVEL

10 mA @ 5 V Max. (AC or DC)

LEVER LOCK SELECTION TABLE

Standard Cap Style	Circuit With Lever: UP Position	CENTER Position	DOWN Position (Keyway)	Lever Lock Bushing Style	Catalog Number: Solder Lug Terminals	Printed Circuit Terminals
ONE POLE						
	ON ▶	◀ OFF ▶	◀ ON	1	A121K12KZG-M8	A121K12KCG-M8
	ON ▶	NONE	◀ ON	2	A123K12KZG-M8	A123K12KCG-M8
	ON ▶	NONE	ON*	3	A126K12KZG-M8	A126K12KCG-M8
	ON*	◀ OFF ▶	ON*	4	A127K12KZG-M8	A127K12KCG-M8
	ON ▶	◀ OFF ▶	ON*	5	A131K12KZG-M8	A131K12KCG-M8
TWO POLE						
	ON ▶	◀ OFF ▶	◀ ON	1	A221K12KZG-M8	A221K12KCG-M8
	ON ▶	NONE	◀ ON	2	A223K12KZG-M8	A223K12KCG-M8
	ON ▶	NONE	ON*	3	A226K12KZG-M8	A226K12KCG-M8
	ON*	◀ OFF ▶	ON*	4	A227K12KZG-M8	A227K12KCG-M8
	ON ▶	◀ OFF ▶	ON*	5	A231K12KZG-M8	A231K12KCG-M8
	ON ▶	◀ ON ▶	◀ ON	1	A232K12KZG-M8	A232K12KCG-M8

* Momentary Contact
▶ Indicates direction against which lever is locked.

APPROXIMATE DIMENSIONS (For terminal dimensions see page 49)

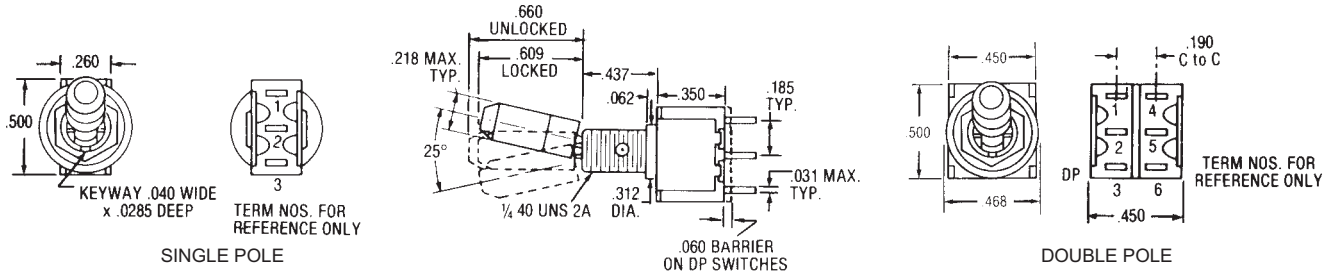

LEVER LOCK BUSHING STYLES

(The descriptive illustrations below are for pictorial representation only — keyway on right hand side)

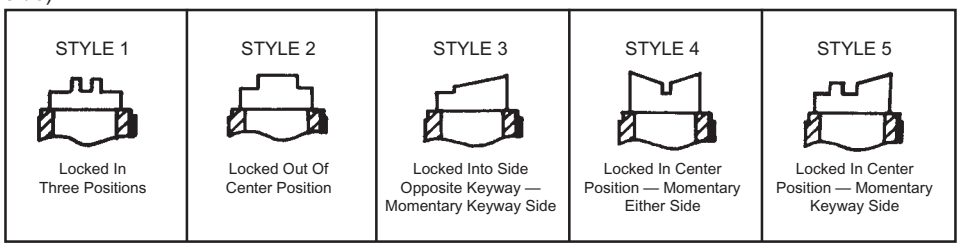

"ON-ON-ON" CIRCUIT DIAGRAM

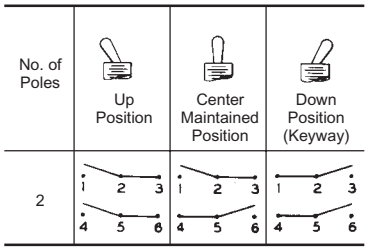

Commercial Miniature Toggle Switches
Right Angle Mount (Vertical) P.C. Terminals

SPECIFICATIONS

- Originally designed to meet the requirements of MIL-S-83731 (see page 54 for Test Specifications).
- Sealed lever type with panel seal and terminal seal.
- Right angle mount (vertical) printed circuit terminals.
- Epoxy sealed printed circuit terminals.
- One and two pole circuits.
- High electrical/mechanical reliability.
- Dry circuit current carrying ability.
- Toggle lever throw 25° ±5°.

MATERIAL

- **Base (body)** — Diallyl Phthalate.
- **Lever** — Brass, bright chrome plated.
- **Bushing** — Brass, nickel plated.
  Frame — Stainless steel.
- **Switching Contacts and Rockers** — 50 millionths gold over silver.
- **Center Terminal** — 50 millionths gold over silver.
- **Hardware** — None required.

CURRENT RATINGS

Current Capacity in Amperes — Per Pole		
28 V DC	115 V AC 400 Hz	125 V AC 60 Hz
LAMP LOAD		
1	1	1
RESISTIVE LOAD		
5	5	5
INDUCTIVE LOAD		
2	2	2

LOGIC LEVEL

10 mA @ 5 V Max. (AC or DC)

SWITCH SELECTION TABLE — SEALED

	Circuit With Lever In…			Catalog Number
	UP Position	CENTER Position	DOWN Position (Position C)	
	ONE POLE			
SPDT	ON	OFF	ON	A121M1D9AVG-M8
	ON	NONE	ON	A123M1D9AVG-M8
	ON	NONE	ON*	A126M1D9AVG-M8
	ON*	OFF	ON*	A127M1D9AVG-M8
	ON	OFF	ON*	A131M1D9AVG-M8
	NONE	ON	ON*	A134M1D9AVG-M8
	TWO POLE			
DPDT	ON	OFF	ON	A221M1D9AVG-M8
	ON	NONE	ON	A223M1D9AVG-M8
	ON	NONE	ON*	A226M1D9AVG-M8
	ON*	OFF	ON*	A227M1D9AVG-M8
	ON	OFF	ON*	A231M1D9AVG-M8
	ON	ON	ON	A232M1D9AVG-M8
	ON	ON	ON*	A233M1D9AVG-M8
	NONE	ON	ON*	A234M1D9AVG-M8
	ON*	ON	ON*	A235M1D9AVG-M8

* Momentary Contact

APPROXIMATE DIMENSIONS

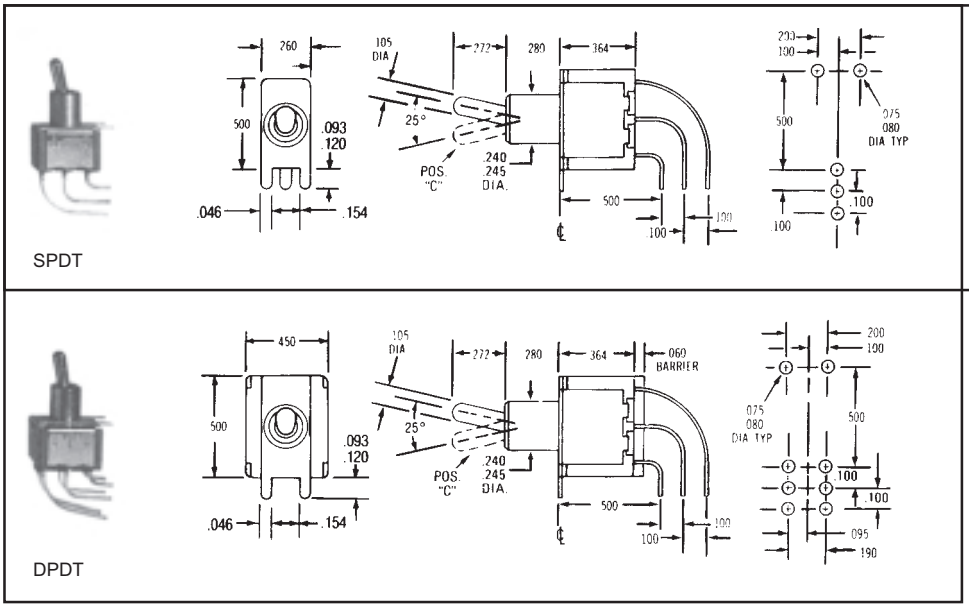

TERMINAL DIMENSIONS

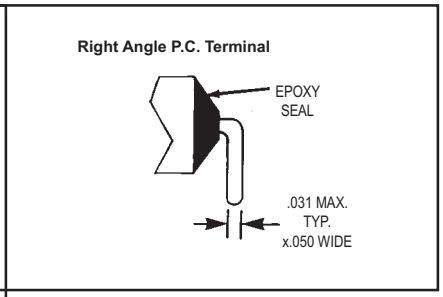

"ON-ON-ON" CIRCUIT DIAGRAM

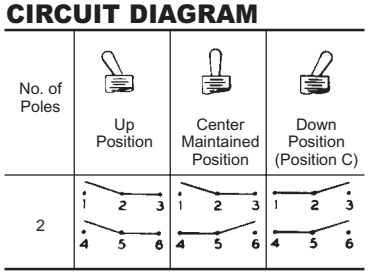

Commercial Miniature Toggle Switches
Right Angle Mount (Horizontal) P.C. Terminals

SPECIFICATIONS

- Originally designed to meet the requirements of MIL-S-83731 (see page 54 for Test Specifications).
- Sealed lever type with terminal seal.
- Right angle mount (horizontal) printed circuit terminals.
- Epoxy sealed printed circuit terminals.
- One and two pole circuits.
- High electrical/mechanical reliability.
- Dry circuit current carrying ability.
- Toggle lever throw 25° ±5°.

MATERIAL

- **Base (body)** — Diallyl Phthalate.
- **Lever** — Brass, bright chrome plated.
- **Bushing** — Brass, nickel plated.
  Frame — Stainless steel.
- **Switching Contacts and Rockers** — 50 millionths gold over silver.
- **Center Terminal** — 50 millionths gold over silver.
- **Hardware** — None required.

CURRENT RATINGS

Current Capacity in Amperes — Per Pole		
28 V DC	115 V AC 400 Hz	125 V AC 60 Hz
LAMP LOAD		
1	1	1
RESISTIVE LOAD		
5	5	5
INDUCTIVE LOAD		
2	2	2

LOGIC LEVEL

10 mA @ 5 V Max. (AC or DC)

SWITCH SELECTION TABLE — SEALED

	Circuit With Lever In…			
	UP Position	CENTER Position	DOWN Position (Position C)	Catalog Number
	ONE POLE			
SPDT	ON	OFF	ON	A121M1D9AG-M8
	ON	NONE	ON	A123M1D9AG-M8
	ON	NONE	ON*	A126M1D9AG-M8
	ON*	OFF	ON*	A127M1D9AG-M8
	ON	OFF	ON*	A131M1D9AG-M8
	NONE	ON	ON*	A134M1D9AG-M8
	TWO POLE			
DPDT	ON	OFF	ON	A221M1D9AG-M8
	ON	NONE	ON	A223M1D9AG-M8
	ON	NONE	ON*	A226M1D9AG-M8
	ON*	OFF	ON*	A227M1D9AG-M8
	ON	OFF	ON*	A231M1D9AG-M8
	ON	ON	ON	A232M1D9AG-M8
	ON	ON	ON*	A233M1D9AG-M8
	NONE	ON	ON*	A234M1D9AG-M8
	ON*	ON	ON*	A235M1D9AG-M8

* Momentary Contact

APPROXIMATE DIMENSIONS

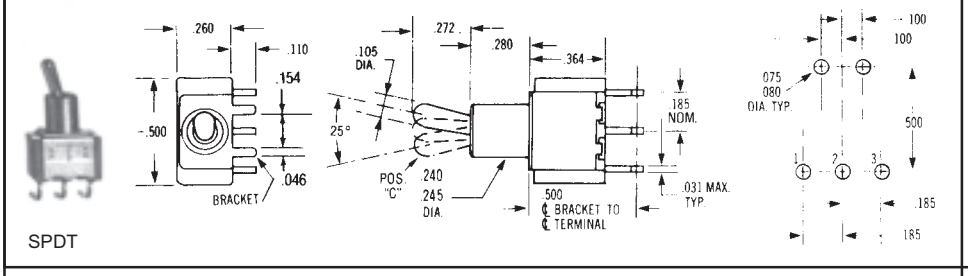

SPDT

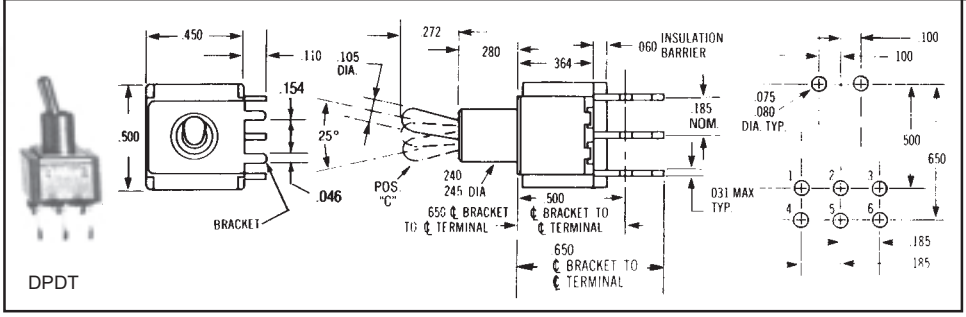

DPDT

TERMINAL DIMENSIONS

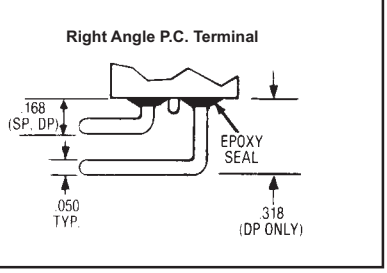

"ON-ON-ON" CIRCUIT DIAGRAM

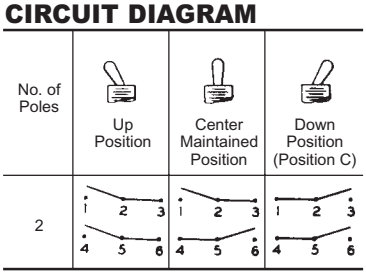

Commercial Miniature Toggle Switches – New Four Pole

SPECIFICATIONS

- Originally designed to meet the requirements of MIL-S-83731 (see page 54 for Test Specifications).
- Sealed lever type with panel seal and terminal seal.
- Flatted bushing on sealed lever type.
- Solder lug or printed circuit terminals.
- Epoxy sealed terminals.
- One and two pole circuits.
- High electrical/mechanical reliability.
- Dry circuit current carrying ability.
- Toggle lever throw 25° ±5°.

MATERIAL

- **Base (body)** — Diallyl Phthalate.
- **Lever** — Brass, bright chrome plated.
- **Locking Lever** — Brass, nickel plated. **Cap** — natural anodized aluminum supplied as standard; other colors such as red, blue, gold, black and green are also available.
- **Bushing** — Brass, nickel plated. **Frame** — Stainless steel.
- **Switching Contacts and Rockers** — 50 millionths gold over silver.
- **Center Terminal** — 50 millionths gold over silver.
- **Hardware** — Refer to hardware listing on page 57.

CURRENT RATINGS

Current Capacity in Amperes — Per Pole		
28 V DC	115 V AC 400 Hz	125 V AC 60 Hz
LAMP LOAD		
1	1	1
RESISTIVE LOAD		
5	5	5
INDUCTIVE LOAD		
2	2	2

LOGIC LEVEL

10 mA @ 5 V Max. (AC or DC)

SWITCH SELECTION TABLE — SEALED

4-PDT

Circuit With Lever In…			Catalog Number	
UP Position	CENTER Position	DOWN Position (Flat)	Solder Lug Terminals	Printed Circuit Terminals
ON	OFF	ON	A421S1CWZG-M8	A421S1CWCG-M8
ON	NONE	ON	A423S1CWZG-M8	A423S1CWCG-M8
ON	NONE	ON*	A426S1CWZG-M8	A426S1CWCG-M8
ON*	OFF	ON*	A427S1CWZG-M8	A427S1CWCG-M8
ON	OFF	ON*	A431S1CWZG-M8	A431S1CWCG-M8
ON	ON	ON	A432S1CWZG-M8	A432S1CWCG-M8
ON	ON	ON*	A433S1CWZG-M8	A433S1CWCG-M8
NONE	ON	ON*	A434S1CWZG-M8	A434S1CWCG-M8
ON*	ON	ON*	A435S1CWZG-M8	A435S1CWCG-M8

* Momentary Contact

LEVER LOCK SELECTION TABLE — UNSEALED

FOUR POLE

Standard Cap Style	Circuit With Lever In…				Catalog Number	
	UP Position	CENTER Position	DOWN Position (Keyway)	Lever Lock Bushing Style	Solder Lug Terminals	Printed Circuit Terminals
	ON ▶	◀ OFF ▶	◀ ON	1	A421K12KZG-M8	A421K12KCG-M8
	ON ▶	NONE	◀ ON	2	A423K12KZG-M8	A423K12KCG-M8
	ON ▶	NONE	ON*	3	A426K12KZG-M8	A426K12KCG-M8
	ON*	◀ OFF ▶	ON*	4	A427K12KZG-M8	A427K12KCG-M8
	ON ▶	◀ OFF ▶	ON*	5	A431K12KZG-M8	A431K12KCG-M8
	ON ▶	◀ ON ▶	◀ ON	1	A432K12KZG-M8	A432K12KCG-M8

* Momentary Contact
▶ Indicates direction against which lever is locked.

APPROXIMATE DIMENSIONS (For terminal dimensions see page 49)

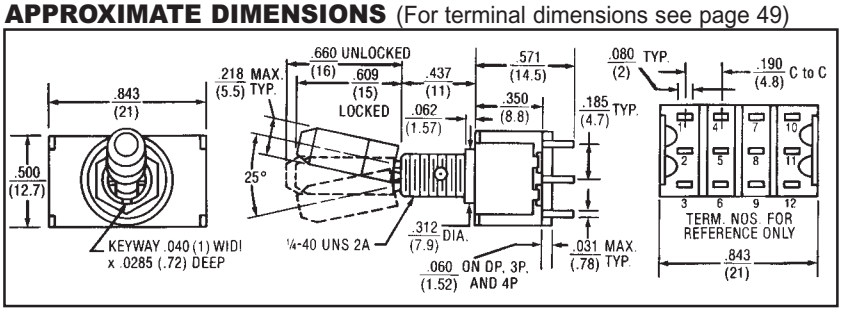

APPROXIMATE DIMENSIONS

(For terminal dimensions see page 49)

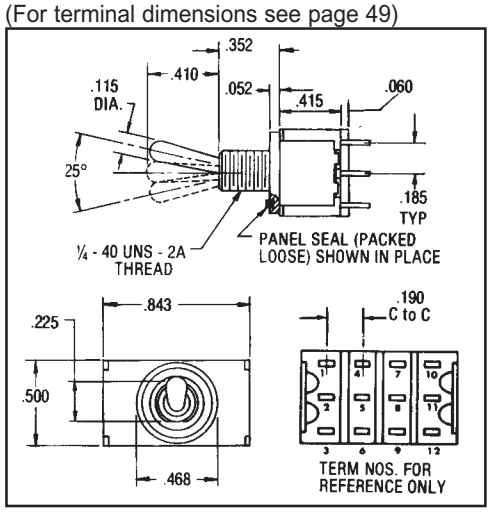

"ON-ON-ON" CIRCUIT DIAGRAM

No. of Poles	Up Position	Center Maintained Position	Down Position (Keyway)
4	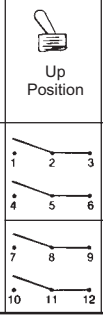		

NOTE: FOR LEVER LOCK BUSHING STYLES SEE PAGE 50.

"A" Series Originally Designed To Meet the Following MIL Specifications

Test Requirement	MIL Specification
1. Strength of Terminal	1 lb. — solder lug
2. Strength of Actuating Lever Pivot and Stop	10 lbs. & 8 lbs. throughout range
3. Strength of Mounting Means	15 lbs. in. torque on bushing
4. Dielectric (Sea Level) Indication Dielectric (Altitude)	1000 VAC Group C 750 VAC after electrical endurance. 500 µA max. leakage
5. Contact Voltage Drop	2.5 millivolt initial 5.0 millivolt after mechanical endurance @ 2-6 VDC 0.1 amp.
6. Temperature Rise	50°C rise @ rated resistance after endurance test current
7. Short Circuit	10 operations make and carry 100 amps resistive load @ lowest DC volts
8. Mechanical Life	20K operations at specified high and low temperatures
9. Electrical Endurance	10K operations at specified high and low temperatures
10. Overload	50 operations @ 150% of rated resistive load
11. A) Electrical Endurance at Altitude	No requirement
B) Electrical Endurance at Sea Level	10K operations resistive load @ room temperature 10K operations inductive load @ room temperature 10K operations lamp load @ room temperature Performed on different test samples
12. Vibration	Method 204 of MIL-STD-202, test condition A .06 D.A. or 10 G's 10-500 Hz 10 usec. max. chatter
13. Shock	Fuse-method 213 or MIL-STD @75 G's 10 usec. max, chatter
14. Salt Spray Test Upon Completion	48 hours — method 101 of MIL-STD-202, test condition B 10 operations resistive load (toggle sealed switches only)
15. Moisture Resistance Test Upon Completion	Method 106 of MIL-STD-202 100 VDC potential between current carrying parts and panel
16. Sand & Dust	Method 110 of MIL-STD-202, test condition B 6 hours @ 23°C 2.5K operations mechanical life (toggle sealed switches only)
17. Explosion	MIL-STD-202 method 109, maximum rated DC inductive load (toggle sealed switches only)
18. Sealing	Toggle seal — 5 operations under 0.5 inches of H_2O above top of bushing
19. A) Toggle Seal B) Bushing Seal	No requirement
20. Temperature Operation	Mechanical life, -25°C to +71°C
21. Life Low Cur. Level	No requirement
22. Fungus	No requirement
23. Intermediate Current	10K operations, 50 milliamps @ 10 VDC resistive load @ 20,000 feet altitude @ room temperature
24. Thermal Shock	Method 107 of MIL-STD-202 test condition A 5 cycles @ -55°C/+85°C

Construction Detail Wiring and Electrical Diagrams for Standard Miniature Switches

CONSTRUCTION DETAIL

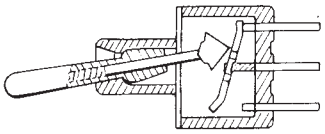

2 POSITION on-none-on

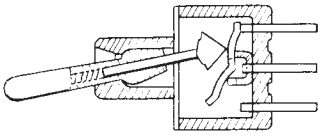

3 POSITION on-off-on

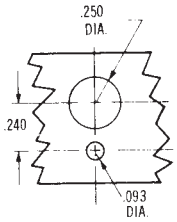

For 1/4" Bushing and Standard Locking Ring

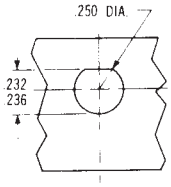

For 1/4" Flatted Bushing

WIRING FOR 3 POSITION CONVERSION

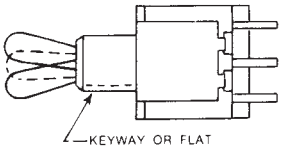

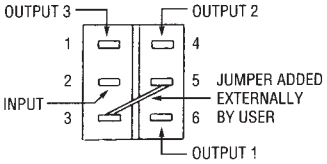

Single Pole Using Double Pole Switch
(For 232, 233 and 235 Circuits)

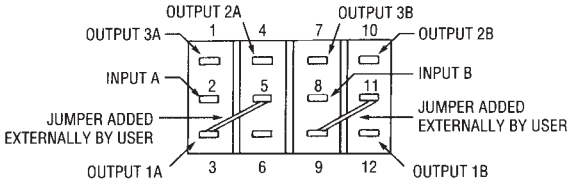

Double Pole Using Four Pole Switch
(For 432, 433 and 435 Circuits)

TOGGLE UP	Output 1	Output 1A, 1B
TOGGLE CENTER	Output 2	Output 2A, 2B
TOGGLE DOWN (Keyway or Flat)	Output 3	Output 3A, 3B

ELECTRICAL DIAGRAMS

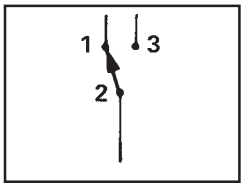

SP

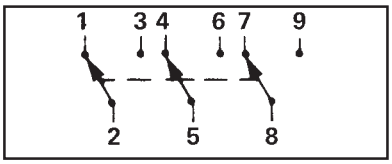

3-P

ALL EXCEPT 232, 233, 235 **Note A**

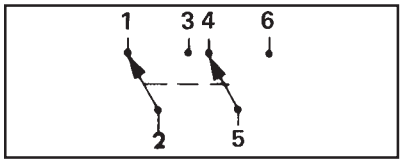

DP

ALL EXCEPT 432, 433, 435 **Note B**

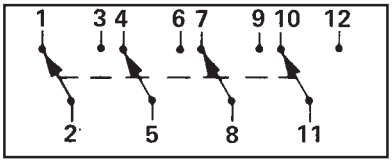

3-P

NOTES

NOTE A: Circuitry	LEVER LEFT	CENTER	RIGHT (KEYWAY)	NOTE B: Circuitry	LEVER LEFT	CENTER	RIGHT (KEYWAY)
232	On 2-3 5-6	On 2-3 4-5	On 1-2 4-5	432	On 2-3-8-9 5-6-11-12	On 2-3-8-9 4-5-10-11	On 1-2-7-8 4-5-10-11
233	On 2-3 5-6	On 2-3 4-5	On* 1-2 4-5	433	On 2-3-8-9 5-6-11-12	On 2-3-8-9 4-5-10-11	On* 1-2-7-8 4-5-10-11
235	On* 2-3 5-6	On 2-3 4-5	On* 1-2 4-5	435	On* 2-3-8-9 5-6-11-12	On 2-3-8-9 4-5-10-11	On* 1-2-7-8 4-5-10-11

Other configurations available on special order.

Circuit Diagrams for Washable Miniature Switches

CIRCUIT CODE	SWITCHING FUNCTION POS 1	POS 2	POS 3
SINGLE POLE			
121	ON	OFF	ON
123	ON	NONE	ON
126	ON	NONE	MOM
127	MOM	OFF	MOM
131	ON	OFF	MOM
TERMINAL CONNECTIONS	2 - 3	OPEN	2 - 1
DOUBLE POLE			
221	ON	OFF	ON
223	ON	NONE	ON
226	ON	NONE	MOM
227	MOM	OFF	MOM
231	ON	OFF	MOM
TERMINAL CONNECTIONS	2 - 3 5 - 6	OPEN	2 - 1 5 - 4
SP3T			
232	ON	ON	ON
233	ON	ON	MOM
235	MOM	ON	MOM
TERMINAL CONNECTIONS	2 - 3 5 - 6	2 - 3 5 - 4	2 - 1 5 - 4

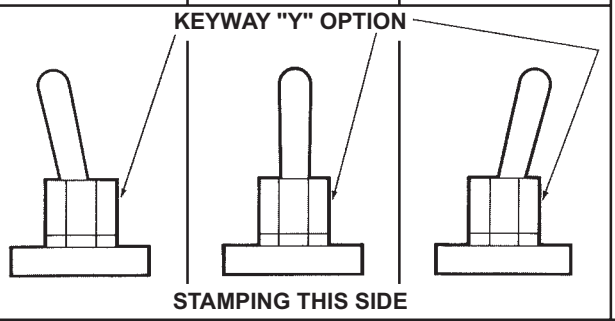

Single Pole

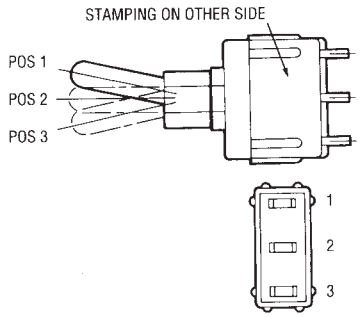

Double Pole

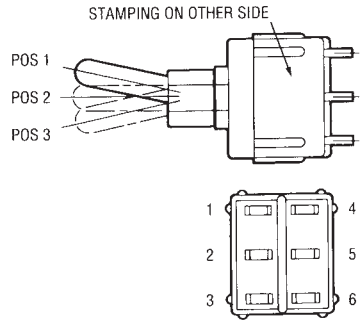

SP3T

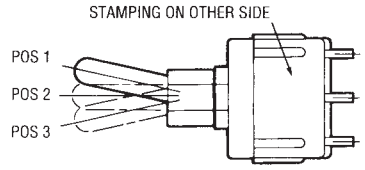

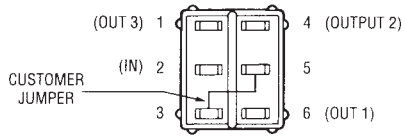

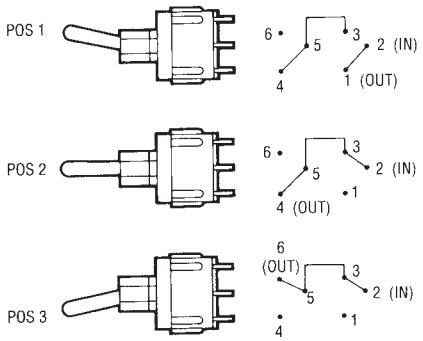

Schematics:

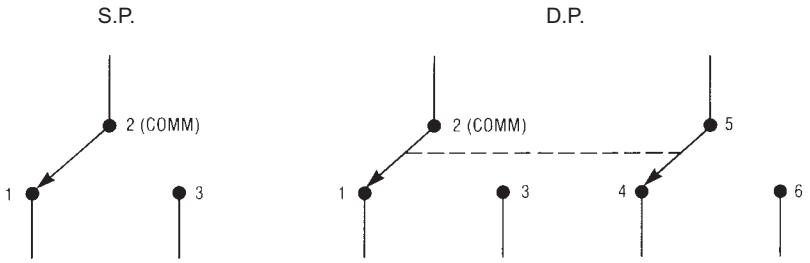

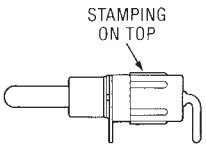

A TERMINALS

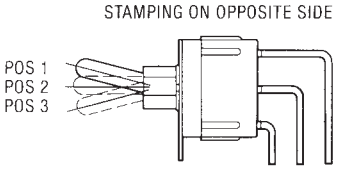

AV2 TERMINALS

CrossReference

FORMER EATON (JBT) PART NUMBER TO ELECTROSWITCH PART NUMBER*

Former Eaton Part No.	Electroswitch Part No.	Former Eaton Part No.	Electroswitch Part No.	Former Eaton Part No.	Electroswitch Part No.	Former Eaton Part No.	Electroswitch Part No.
FH-121	A121P32YZQ	LFH-227	A227P32Y5ZQ	MP2-235	B235J21ZQ22M	MP7-127	B127J60ZQ2
123	A123P32YZQ	231	A231P32Y5ZQ	321	B321J21ZQ22M	131	B131J60ZQ2
126	A126P32YZQ	232	A232P32Y5ZQ	323	B323J21ZQ22M	221	B221J60ZQ2
127	A127P32YZQ	233	A233P32Y5ZQ	327	B327J21ZQ22M	223	B223J60ZQ2
131	A131P32YZQ	234	A234P32Y5ZQ	331	B331J21ZQ22M	226	B226J60ZQ2
FH-134	A134P32YZQ	LFH-235	A235P32Y5ZQ	MP2-421	B421J21ZQ22M	MP7-227	B237J60ZQ2
221	A221P32YZQ	321	A321P32Y5ZQ	423	B423J21ZQ22M	231	B231J60ZQ2
223	A223P32YZQ	323	A323P32Y5ZQ	427	B427J21ZQ22M	232	B232JB0ZQ2
226	A226P32YZQ	327	A327P32Y5ZQ	431	B431J21ZQ22M	233	B233J60ZQ2
227	A227P32YZQ	331	A331P32Y5ZQ	432	B432J21ZQ22M	235	B235J60ZQ2
FH-231	A231P32YZQ	LFH-334	A334P32Y5ZQ	MP2-433	B433J21ZQ22M	MPC-121	A121S1YCQ
232	A232P32YZQ	421	A421P32Y5ZQ	435	B435J21ZQ22M	123	A123S1YCQ
233	A233P32YZQ	423	A423P32Y5ZQ	MP4-121	B121J5ZQ2	126	A126S1YCQ
234	A234P32YZQ	427	A427P32Y5ZQ	123	B123J5ZQ2	127	A127S1YCQ
235	A235P32YZQ	431	A431P32Y5ZQ	126	B126J5ZQ2	131	A131S1YCQ
FH-321	A321P32YZQ	LFH-432	A432P32Y5ZQ	MP4-127	B127J5ZQ2	MPC-134	A134S1YCQ
323	A323P32YZQ	433	A433P32Y5ZQ	131	B131J5ZQ2	221	A221S1YCQ
327	A327P32YZQ	434	A434P32Y5ZQ	221	B221J52Q2	223	A223S1YCQ
331	A331P32YZQ	435	A435P32Y5ZQ	223	B223J5ZQ2	226	A226S1YCQ
334	A334P32YZQ	LL-121	A121K12KZQ	226	B226J5ZQ2	227	A227S1YCQ
FH-421	A421P32YZQ	LL-123	A123K12KZQ	MP4-227	B227J5ZQ2	MPC-231	A231S1YCQ
423	A423P32YZQ	221	A221K12KZQ	231	B231J5ZQ2	232	A232S1YCQ
427	A427P32YZQ	223	A223K12KZQ	232	B232J5ZQ2	233	A233S1YCQ
431	A431P32YZQ	232	A232K12KZQ	233	B223J5ZQ2	234	A234S1YCQ
432	A432P32YZQ	321	A321K12KZQ	235	B235J5ZQ2	235	A235S1YCQ
FH-433	A433P32YZQ	LL-323	A323K12KZQ	MP4-321	B321J5ZQ2	MPC-321	A321S1YCQ
434	A434P32YZQ	421	A421K12KZQ	323	B323J5ZQ2	323	A323S1YCQ
435	A435P32YZQ	423	A423K12KZQ	327	B327J5ZQ2	327	A327S1YCQ
JMT-121	A121S1YZQ	432	A432K12KZQ	331	B331J5ZQ2	331	A331S1YCQ
123	A123S1YZQ	MP1-121	B121J2ZQ2	421	B421J5ZQ2	334	A334S1YCQ
JMT-126	A126S1YZQ	MP1-123	B123J2ZQ2	MP4-423	B423J5ZQ2	MPC-421	A421S1YCQ
127	A127S1YZQ	126	B126J2ZQ2	427	B427J5ZQ2	423	A423S1YCQ
131	A131S1YZQ	127	B127J2ZQ2	431	B431J5ZQ2	427	A427S1YCQ
134	A134S1YZQ	131	B131J2ZQ2	432	B432J5ZQ2	431	A431S1YCQ
221	A221S1YZQ	221	B221J2ZQ2	433	B433J5ZQ2	432	A432S1YCQ
JMT-223	A223S1YZQ	MP1-223	B223J2ZQ2	MP4-435	B435J5ZQ2	MPC-433	A433S1YCQ
226	A226S1YZQ	226	B226J2ZQ2	MPS-121	B121J72V3B2	434	A434S1YCQ
227	A227S1YZQ	227	B227J2ZQ2	123	B123J72V3B2	435	A435S1YCQ
231	A231S1YZQ	231	B231J2ZQ2	126	B126J72V3B2	MR1-121	B121J1ZQ2
232	A232S1YZQ	232	B232J2ZQ2	127	B127J72V3B2	123	B123J1ZQ2
JMT-233	A233S1YZQ	MP1-233	B233J2ZQ2	MP5-131	B131J72V3B2	MB1-126	B126J1ZQ2
234	A234S1YZQ	235	B235J2ZQ2	221	B221J72V3B2	127	B127J1ZQ2
235	A235S1YZQ	321	B321J2ZQ2	223	B223J72V3B2	131	B131J1ZQ2
321	A321S1YZQ	323	B323J2ZQ2	226	B226J72V3B2	221	B221J1ZQ2
323	A323S1YZQ	327	B327J2ZQ2	227	B227J72V3B2	223	B223J1ZQ2
JMT-327	A327S1YZQ	MP1-331	B331J2ZQ2	MF5-231	B231J72V3B2	MR1-226	B226J1ZQ2
331	A331S1YZQ	421	B421J2ZQ2	232	B232J72V3B2	227	B227J1ZQ2
334	A334S1YZQ	423	B423J2ZQ2	233	B223J72V3B2	231	B231J1ZQ2
421	A421S1YZQ	427	B427J2ZQ2	235	B235J72V3B2	232	B232J1ZQ2
423	A423S1YZQ	431	B431J2ZQ2	MP6-121	B121J63ZQ2	233	B233J1ZQ2
JMT-427	A427S1YZQ	MP1-432	B432J2ZQ2	MP6-123	B123J63ZQ2	MR1-235	B235J1ZQ2
431	A431S1YZQ	433	B433J2ZQ2	126	B126J63ZQ2	321	B321J1ZQ2
432	A432S1YZQ	435	B435J2ZQ2	127	B127J63ZQ2	323	B323J1ZQ2
433	A433S1YZQ	MF2-121	B121J21ZQ22M	131	B131J63ZQ2	327	B327J1ZQ2
434	A434S1YZQ	123	B123J21ZQ22M	221	B221J63ZQ2	331	B331J1ZQ2
JMT-435	A435S1YZQ	MP2-126	B126J21ZQ22M	MP6-223	B223J63ZQ2	MR1-421	B421J1ZQ2
LFH-121	A121P32Y5ZQ	127	B127J21ZQ22M	226	B226J63ZQ2	423	B423J1ZQ2
123	A123P32Y5ZQ	131	B131J21ZQ22M	227	B227J63ZQ2	427	B427J1ZQ2
126	A126P32Y5ZQ	221	B221J21ZQ22M	231	B221J63ZQ2	431	B431J1ZQ2
127	A127P32Y5ZQ	223	B223J21ZQ22M	232	B232J63ZQ2	432	B432J1ZQ2
LFH-131	A131P32Y5ZQ	MP2-226	B226J21ZQ22M	MP6-233	B223J63ZQ2	MR1-433	B433J1ZQ2
134	A134P32Y5ZQ	227	B227J21ZQ22M	235	B235J63ZQ2	435	B435J1ZQ2
221	A221P32Y5ZQ	231	B231J21ZQ22M	MP7-121	B121J60ZQ2	MR2-121	B121J11ZQ22M
223	A223P32Y5ZQ	232	B232J21ZQ22M	123	B123J60ZQ2	123	B123J11ZQ22M
226	A226P32Y5ZQ	233	B233J21ZQ22M	126	B126J60ZQ2	126	B126J11ZQ22M

*** EATON PART NUMBERS ARE NOW ELECTROSWITCH PART NUMBERS.**

CrossReference

FORMER EATON (JBT) PART NUMBER TO ELECTROSWITCH PART NUMBER*

Former Eaton Part No.	Electroswitch Part No.	Former Eaton Part No.	Electroswitch Part No.	Former Eaton Part No.	Electroswitch Part No.	Former Eaton Part No.	Electroswitch Part No.
MR2- 127	B127J11ZQ22M	MR6- 226	B226J53ZQ2	PB- 1261AV2Q	PB-12631AV2Q	PB1- 1262WB	PB-12612WB
131	B131J11ZQ22M	227	B227J53ZQ2	1261CB	PB-12631CB	1262ZQE	PB-12612ZQ
221	B221J11ZQ22M	231	B231J53ZQ2	1261CG	PB-12631CG	1262Z3B	PB-12612Z3B
223	B223J11ZQ22M	232	B232J53ZQ2	1261CGE	PB-12631CG	1263ABE	PB-12613AB
226	B226J11ZQ22M	233	B233J53ZQ2	1261CQ	PB-12631CQ	1263CB	PB-12613CB
MR2- 227	B227J11ZQ22M	MR6- 235	B235J53ZQ2	PB- 1261CQE	PB-12631CQ	PB1- 1263WB	PB-12613WB
231	B231J11ZQ22M	MR7- 121	B121J50ZQ2	1261ZB	PB-12631ZB	1263ZB	PB-12613ZB
232	B232J11ZQ22M	123	B123J50ZQ2	1261ZBE	PB-12631ZB	1263ZBE	PB-12613ZB
233	B233J11ZQ22M	126	B126J50ZQ2	1261ZB7E	PB-12631ZB7	1263ZG	PB-12613ZG
235	B235J11ZQ22M	127	B127J50ZQ2	1261ZG	PB-12631ZG	1263ZQE	PB-12613ZQ
MR2- 321	B321J11ZQ22M	MR7- 131	B131J50ZQ2	PB- 1261ZGE	PB-12631ZG	PB1- 1263ZG7	PB-12613ZG7
323	B323J11ZQ22M	221	B221J50ZQ2	1261ZG7E	PB-12631ZG7	PB2- 123	PB-12321ZQ
327	B327J11ZQ22M	223	B223J50ZQ2	1261ZQ	PB-12631ZQ	1233	PB-12323ZQ
331	B331J11ZQ22M	226	B226J50ZQ2	1262CG	PB-12632CG	126	PB-12621ZQ
421	B421J11ZQ22M	227	B227J50ZQ2	1262CQ	PB-12632CQ	126E	PB-12621ZQ
MR2- 423	B423J11ZQ22M	MR7- 231	B231J50ZQ2	PB- 1262WBE	PB-12632WB	PB2- 126WHITE	PB-12622ZQ
427	B427J11ZQ22M	232	B232J50ZQ2	1262ZB	PB-12632ZB	1261	PB-12621ZQ
431	B431J11ZQ22M	233	B233J50ZQ2	1262ZG	PB-12632ZG	PBS- 123	PBS-12331ZQ
432	B432J11ZQ22M	235	B235J50ZQ2	1262ZQ	PB-12632ZQ	123X	PBS-12300ZQ
433	B433J11ZQ22M	PB- 123	PB-12331ZQ	1262ZQE	PB-12632ZQ	126	PBS-12631ZQ
MR2- 435	B435J11ZQ22M	PB- 123E	PB-12331ZQ	PB- 1262Z3G	PB-12632Z3G	PBS- 126X	PBS-12600ZQ
MR3- 121	B121J3ZQ2	123MPC	PB-12331CQ	1263AB	PB-12633AB	PBS2- 126E	PBS-12621ZQ
123	B123J3ZQ2	123RED	PB-12333ZQ	1263AVB	PB-12633AVB	PBW- 126X	PBW-12600ZQ
126	B126J3ZQ2	123X	PB-12300ZQ	1263AVG7	PB-12623AVG7	126ZQE	PBW-12631ZQ
127	B127J3ZQ2	1230CB	PB-12300CB	1263-CG	PB-12633CG	1262ZQE	PBW-12632ZQ
MR3- 131	B131J3ZQ2	PB- 1231AB	PB-12331AB	PB- 1263CGE	PB-12633CG	PBW2- 126	PBW-12621ZAQ
221	B221J3ZQ2	1231AVQ	PB-12331AVQ	1263CQ	PB-12633CQ	PC1- 121	A121M1DRQ
223	B223J3ZQ2	1231CB	PB-12331CB	1263ZB	P6-12633ZB	123	A123M1DRQ
226	B226J3ZQ2	1231CGE	PB-12331CQ	1263ZBE	PB-12633ZB	126	A126M1DRQ
227	B227J3ZQ2	1231CQ	PB-12331CQ	1263ZG	PB-12633ZG	127	A127M1DRQ
MR3- 231	B231J3ZQ2	PB- 1231CQE	PB-12331CQ	PB- 1263ZG7	PB-12633ZG7	PC1- 131	A131M1DRQ
232	B232J3ZQ2	1231ZB	PB-12331ZB	1263ZQ	PB-12633ZQ	134	A134M1DRQ
233	B233J3ZQ2	1231ZG	PB-12331ZG	PB1- 123	PB-12311ZQ	PC2- 121	A121M1DR2Q
235	B235J3ZQ2	1231ZGE	PB-12331ZG	1231AB	PB-12311AB	123	A123M1DR2Q
321	B321J3ZQ2	1231ZG7	PB-12331ZG7	1231Z6	PB-12311ZB	126	A126M1DR2Q
MR3- 323	B323J3ZQ2	PB- 1232ZB	PB-12332ZB	PB1- 1231ZG	PB-12311ZG	PC2- 127	A127M1DR2Q
327	B327J3ZQ2	1233AVB	PB-12333AVB	1231ZG7	PB-12311ZG7	131	A131M1DR2Q
331	B331J3ZQ2	1233CG	PB-12333CG	1231Z3Q	PB-12311Z3Q	134	A134M1DR2Q
421	B421J3ZQ2	1233CQ	PB-12333CQ	1232ZB	PB-12312ZB	PS1- 1XX	PS1-1XXQ
423	B423J3ZQ2	1233ZB	PB-12333ZB	1232ZB7	P6-12312ZB7	100	PS1-100Q
MR3- 427	B427J3ZQ2	PB- 1233ZG	PB-12333ZG	PB1- 1232ZQE	PB-12312ZQ	PS1- 2XX	PS1-2XXQ
431	B431J3ZQ2	1233ZG7	PB-12333ZG7	1233ZG7	PB-12313ZG7	200	PS1-200Q
432	B432J3ZQ2	1233ZQ	PB-12333ZQ	126	PB-12611ZQ	PS2- 1XX	PS2-1XXQ
433	B433J3ZQ2	126	PB-12631ZQ	126G	PB-12611ZG	100	PS2-100Q
435	B435J3ZQ2	126AV2BE	PB-12631AV2B	126MPC	PB-12611CQ	2XX	PS2-2XXQ
M65- 121	B121J71V3B2	PB- 126CGE	PB-12631CG	PB1- 126RED	PB-12613ZQ	PS2- 200	PS2-200Q
123	B123J71V3B2	126CQ	PB-12631CQ	126WHITE	PB-12612ZQ	PS3- 1XX	PS1-1XXB
126	B126J71V3B2	126CQE	PB-12631CQ	1261AB	PB-12611AB	100	PS1-100B
127	B127J71V3B2	126E	PB-12631ZQ	1261ABE	PB-12611AB	2XX	PS1-2XXB
131	B121J71V3B2	126EWHITE	PB-12632ZQ	1261AQ	PB-12611AQ	200	PS1-200B
M65- 221	B221J71V3B2	PB- 126EX	PB-12600ZQ	PB1- 1261AVB	PB-12611AVB	PS4- 1XX	PS2-100B
223	B223J71V3B2	126G	PB-12631ZG	1261AVQ	PB-12611AVQ	2XX	PS2-2XXB
226	B226J71V3B2	126MPC	PB-12631CQ	1261CB	PB-12611CB	200	PS2-200B
227	B227J71V3B2	126RED	PB-12633ZQ	1261CQ	PB-12611CQ	PS5- 1XX	PS5-1XXQ
231	B231J71V3B2	126UL	PB-12631ZQ	1261WBE	PB-12611WB	100	PS5-100Q
MR5- 232	B232J71V3B2	PB- 126WHITE	PB-12632ZQ	PB1- 1261WG	PB-12611WG	PS6- 1XX	PS6-1XXQ
233	B233J71V3B2	126X	PB-12600ZQ	1261ZB	PB-12611ZB	100	PS6-100Q
235	B235J71V3B2	1260AB	PB-12600AB	1261ZBE	PB-12611ZB	PS7- 1XX	PS7-1XXB
MR6- 121	B121J53ZQ2	1260ZB	PB-12600ZB	1261ZG	PB-12611ZG	100	PS7-100B
123	B123J53ZQ2	1261AB	PB-12631AB	1261ZGE	PB-12611ZG	2XX	PS7-2XXB
M66- 126	B126J53ZQ2	PB- 1261ABE	PB-12631AB	PB1- 1261ZG7	PB-12611ZG7	PS7- 200	PS7-200B
127	B127J53ZQ2	1261AQ	PB-12631AQ	1261ZQ	PB-12611ZQ	PS8- 1XX	PS8-1XXB
131	B131J53ZQ2	1261AVQ	PB-12631AVQ	1261ZQE	PB-12611ZQ	100	PS8-100B
221	B221J53ZQ2	1261AV2B	PB-12631AV2B	1261Z3B	PB-12611Z3B	2XX	PS8-2XXB
223	B223J53ZQ2	1261AV2BE	PB-12631AV2B	1262CB	PB-12612CB	200	PS8-200B

*** EATON PART NUMBERS ARE NOW ELECTROSWITCH PART NUMBERS.**

CrossReference

FORMER EATON (JBT) PART NUMBER TO ELECTROSWITCH PART NUMBER*

Former Eaton Part No.	Electroswitch Part No.	Former Eaton Part No.	Electroswitch Part No.	Former Eaton Part No.	Electroswitch Part No.	Former Eaton Part No.	Electroswitch Part No.
PS9- 1XX	PS9-1XXB	T01- 234	A234S1YWB	T04- 223	A223S1CWZQ	T11- 123	A123S1HZQ
100	PS9-100B	235	A235S1YWB	226	A226S1CWZQ	126	A126S1HZQ
2XX	PS9-2XXB	321	A321S1YWB	227	A227S1CWZQ	127	A127S1HZQ
200	PS9-200B	323	A323S1YWB	231	A231S1CWZQ	131	A131S1HZQ
PS10- 1XX	PS10-1XXB	327	A327S1YWB	232	A232S1CWZQ	134	A134S1HZQ
PS10- 100	PS10-100B	T01- 331	A331S1YWB	T04- 233	A233S1CWZQ	T11- 221	A221S1HZQ
2XX	PS10-2XXB	334	A334S1YWB	234	A234S1CWZQ	223	A223S1HZQ
200	PS10-200B	421	A421S1YWB	235	A235S1CWZQ	226	A226S1HZQ
PS11- 1XX	PS11-1XXB	423	A423S1YWB	321	A321S1CWZQ	227	A227S1HZQ
100	PS11-100B	427	A427S1YWB	323	A323S1CWZQ	231	A231S1HZQ
PS11- 2XX	PS11-2XXB	T01- 431	A431S1YWB	T04- 327	A327S1CWZQ	T11- 232	A232S1HZQ
200	PS11-200B	432	A432S1YWB	331	A331S1CWZQ	233	A233S1HZQ
PS14- 1XXX	PS14-1XXXQ	433	A433S1YWB	334	A334S1CWZQ	234	A234S1HZQ
100	PS14-100Q	434	A434S1YWB	421	A421S1CWZQ	235	A235S1HZQ
2XXX	PS14-2XXXQ	435	A435S1YWB	423	A423S1CWZQ	321	A321S1HZQ
PS14- 200	PS14-200Q	T02- 121	A121M1D9AB	T04- 427	A427S1CWZQ	T11- 323	A323S1HZQ
PS15- 1XXX	PS15-1XXXQ	123	A123M1D9AB	431	A431S1CWZQ	327	A327S1HZQ
100	PS15-100Q	126	A126M1D9AB	432	A432S1CWZQ	331	A331S1HZQ
2XXX	PS15-2XXXQ	127	A127M1D9AB	433	A433S1CWZQ	334	A334S1HZQ
200	PS15-200Q	131	A131M1D9AB	434	A434S1CWZQ	421	A421S1HZQ
PS16- 1XXX	PS16-1XXXQ	T02- 134	A134M1D9AB	T04- 435	A435S1CWZQ	T11- 423	A432S1HZQ
100	PS16-100Q	221	A221M1D9AB	T06- 121	A121S1YZB	427	A427S1HZQ
2XXX	PS16-2XXXQ	223	A223M1D9AB	123	A123S1YZB	431	A431S1HZQ
200	PS16-200Q	226	A226M1D9AB	126	A126S1YZB	432	A432S1HZQ
PS17- 1XXX	PS17-1XXXQ	227	A227M1D9AB	127	A127S1YZB	433	A433S1HZQ
PS17- 100	PS17-100Q	T02- 231	A231M1D9AB	T06- 131	A131S1YZB	T11- 434	A434S1HZQ
2XXX	PS17-2XXXQ	232	A232M1D9AB	134	A134S1YZB	435	A435S1HZQ
200	PS17-200Q	233	A233M1D9AB	221	A221S1YZB	T12- 121	A121S1YZQP
PS71- 1XXX	PS71-1XXB	234	A234M1D9AB	223	A223S1YZB	123	A123S1YZQP
100	PS71-100B	235	A235M1D9AB	226	A226S1YZB	126	A126S1YZQP
PS71- 2XX	PS71-2XXB	T03- 121	A121S1CXZQ	T06- 227	A227S1YZB	T12- 127	A127S1YZQP
200	PS71-200B	123	A123S1CXZQ	231	A231S1YZB	131	A131S1YZQP
PS72- 1XXX	PS72-1XXB	126	A126S1CXZQ	232	A232S1YZB	134	A134S1YZQP
100	PS72-100B	127	A127S1CXZQ	233	A233S1YZB	221	A221S1YZQP
2XX	PS72-2XXB	131	A131S1CXZQ	234	A234S1YZB	223	A223S1YZQP
PS72- 200	PS72-200B	T03- 134	A134S1CXZQ	T06- 235	A235S1YZB	T12- 226	A226S1YZQP
PS73- 1XX	PS73-1XXB	221	A221S1CXZQ	321	A321S1YZB	227	A227S1YZQP
100	PS73-100B	223	A223S1CXZQ	323	A323S1YZB	231	A231S1YZQP
2XX	PS73-2XXB	226	A226S1CXZQ	327	A327S1YZB	232	A232S1YZQP
200	PS73-200B	227	A227S1CXZQ	331	A331S1YZB	233	A233S1YZQP
PS81- 1XX	PS81-1XXB	T03- 231	A231S1CXZQ	T06- 334	A334S1YZB	T12- 234	A234S1YZQP
100	PS81-100B	232	A232S1CXZQ	421	A421S1YZB	235	A235S1YZQP
2XX	PS81-2XXB	233	A233S1CXZQ	423	A423S1YZB	321	A321S1YZQP
200	PS81-200B	234	A234S1CXZQ	427	A427S1YZB	323	A323S1YZQP
PS82- 1XX	PS82-1XXB	235	A235S1CXZQ	431	A431S1YZB	327	A327S1YZQP
PS82- 100	PS82-100B	T03- 321	A321S1CXZQ	T06- 432	A432S1YZB	T12- 331	A331S1YZQP
2XX	PS82-2XXB	323	A323S1CXZQ	433	A433S1YZB	334	A334S1YZQP
200	PS82-200B	327	A327S1CXZQ	434	A434S1YZB	421	A421S1YZQP
PS83- 1XX	PS83-1XXB	331	A331S1CXZQ	435	A435S1YZB	423	A423S1YZQP
100	PS83-100B	334	A334S1CXZQ	T08- 121	A121M1D9AVB	427	A427S1YZQP
PS83- 2XX	PS83-2XXB	T03- 421	A421S1CXZQ	T08- 123	A123M1D9AVB	T12- 431	A431S1YZQP
200	PS83-200B	423	A423S1CXZQ	126	A126M1D9AVB	432	A432S1YZQP
T01- 121	A121S1YWB	427	A427S1CXZQ	127	A127M1D9AVB	433	A433S1YZQP
123	A123S1YWB	431	A431S1CXZQ	131	A131M1D9AVB	434	A434S1YZQP
126	A126S1YWB	432	A432S1CXZQ	134	A134M1D9AVB	435	A435S1YZQP
T01- 127	A127S1YWB	T03- 433	A433S1CXZQ	T08- 221	A221M1D9AVB	T13- 121	A121S1YZ3Q
131	A131S1YWB	434	A434S1CXZQ	223	A223M1D9AVB	123	A123S1YZ3Q
134	A134S1YWB	435	A435S1CXZQ	226	A226M1D9AVB	126	A126S1YZ3Q
221	A221S1YWB	T04- 121	A121S1CXZQ	227	A227M1D9AVB	127	A127S1YZ3Q
223	A223S1YWB	123	A123S1CXZQ	231	A231M1D9AVB	131	A131S1YZ3Q
T01- 226	A226S1YWB	T04- 126	A126S1CXZQ	T08- 232	A232M1D9AVB	T13- 134	A134S1YZ3Q
227	A227S1YWB	127	A127S1CXZQ	233	A233M1D9AVB	221	A221S1YZ3Q
231	A231S1YWB	131	A131S1CXZQ	234	A234M1D9AVB	223	A223S1YZ3Q
232	A232S1YWB	134	A134S1CXZQ	235	A235M1D9AVB	226	A226S1YZ3Q
233	A233S1YWB	221	A221S1CXZQ	T11- 121	A121S1HZQ	227	A227S1YZ3Q

*** EATON PART NUMBERS ARE NOW ELECTROSWITCH PART NUMBERS.**

CrossReference

FORMER EATON (JBT) PART NUMBER TO ELECTROSWITCH PART NUMBER*

Former Eaton Part No.	Electroswitch Part No.	Former Eaton Part No.	Electroswitch Part No.	Former Eaton Part No.	Electroswitch Part No.	Former Eaton Part No.	Electroswitch Part No.
T13- 231	A231S1YZ3Q	T17- 126	A126L34YZQ	T19- 232	A232P12YZQ	T21- 421	A421L01YZQ
232	A232S1YZ3Q	127	A127L34YZQ	233	A233P12YZQ	423	A423L01YZQ
233	A233S1YZ3Q	131	A131L34YZQ	234	A234P12YZQ	427	A427L01YZQ
234	A234S1YZ3Q	134	A134L34YZQ	235	A235P12YZQ	431	A431L01YZQ
235	A235S1YZ3Q	221	A221L34YZQ	321	A321P12YZQ	432	A432L01YZQ
T13- 321	A321S1YZ3Q	T17- 223	A223L34YZQ	T19- 323	A323P12YZQ	T21- 433	A433L01YZQ
323	A323S1YZ3Q	226	A226L34YZQ	327	A327P12YZQ	434	A434L01YZQ
327	A327S1YZ3Q	227	A227L34YZQ	331	A331P12YZQ	435	A435L01YZQ
331	A331S1YZ3Q	231	A231L34YZQ	334	A334P12YZQ	T22- 121	A121L11YZQ
334	A334S1YZ3Q	232	A232L34YZQ	421	A421P12YZQ	123	A123L11YZQ
T13- 421	A421S1YZ3Q	T17- 233	A233L34YZQ	T19- 423	A423P12YZQ	T22- 126	A126L11YZQ
423	A423S1YZ3Q	234	A234L34YZQ	427	A427P12YZQ	127	A127L11YZQ
427	A427S1YZ3Q	235	A235L34YZQ	431	A431P12YZQ	131	A131L11YZQ
431	A431S1YZ3Q	321	A321L34YZQ	432	A432P12YZQ	134	A134L11YZQ
432	A432S1YZ3Q	323	A323L34YZQ	433	A433P12YZQ	221	A221L11YZQ
T13- 433	A433S1YZ3Q	T17- 327	A327L34YZQ	T19- 434	A434P12YZQ	T22- 223	A223L11YZQ
434	A434S1YZ3Q	331	A331L34YZQ	435	A435P12YZQ	226	A226L11YZQ
435	A435S1YZ3Q	334	A334L34YZQ	T20- 121	A121P42YZQ	227	A227L11YZQ
T14- 121	A121M1D9AV2B	421	A421L34YZQ	123	A123P42YZQ	231	A231L11YZQ
123	A123M1D9AV2B	423	A423L34YZQ	126	A126P42YZQ	232	A232L11YZQ
T14- 126	A126M1D9AV2B	T17- 427	A427L34YZQ	T20- 127	A127P42YZQ	T22- 233	A233L11YZQ
127	A127M1D9AV2B	431	A431L34YZQ	131	A131P42YZQ	234	A234L11YZQ
131	A131M1D9AV2B	432	A432L34YZQ	134	A134P42YZQ	235	A235L11YZQ
134	A134M1D9AV2B	433	A433L34YZQ	221	A221P42YZQ	321	A321L11YZQ
221	A221M1D9AV2B	434	A434L34YZQ	223	A223P42YZQ	323	A323L11YZQ
T14- 223	A223M1D9AV2B	T17- 435	A435L34YZQ	T20- 226	A226P42YZQ	T22- 327	A327L11YZQ
226	A226M1D9AV2B	T18- 121	A121L44YZQ	227	A227P42YZQ	331	A331L11YZQ
227	A227M1D9AV2B	123	A123L44YZQ	231	A231P42YZQ	334	A334L11YZQ
231	A231M1D9AV2B	126	A126L44YZQ	232	A232P42YZQ	421	A421L11YZQ
232	A232M1D9AV2B	127	A127L44YZQ	233	A233P42YZQ	423	A423L11YZQ
T14- 233	A233M1D9AV2B	T18- 131	A131L44YZQ	T20- 234	A234P42YZQ	T22- 427	A427L11YZQ
234	A234M1D9AV2B	134	A134L44YZQ	235	A235P42YZQ	431	A431L11YZQ
235	A235M1D9AV2B	221	A221L44YZQ	321	A321P42YZQ	432	A432L11YZQ
T15- 121	A121M1D9V30B	223	A223L44YZQ	323	A323P42YZQ	433	A433L11YZQ
123	A123M1D9V30B	226	A226L44YZQ	327	A327P42YZQ	434	A434L11YZQ
T15- 126	A126M1D9V30B	T18- 227	A227L44YZQ	T20- 331	A331P42YZQ	T22- 435	A435L11YZQ
127	A127M1D9V30B	231	A231L44YZQ	334	A334P42YZQ	T23- 121	A121T11TZQ
131	A131M1D9V30B	232	A232L44YZQ	421	A421P42YZQ	123	A123T11TZQ
134	A134M1D9V30B	233	A233L44YZQ	423	A423P42YZQ	221	A221T11TZQ
221	A221M1D9V30B	234	A234L44YZQ	427	A427P42YZQ	223	A223T11TZQ
T15- 223	A223M1D9V30B	T18- 235	A235L44YZQ	T20- 431	A431P42YZQ	T23- 323	A323T11TZQ
226	A226M1D9V30B	321	A321L44YZQ	432	A432P42YZQ	423	A423T11TZQ
227	A227M1D9V30B	323	A323L44YZQ	433	A433P42YZQ		
231	A231M1D9V30B	327	A327L44YZQ	434	A434P42YZQ		
232	A232M1D9V30B	331	A331L44YZQ	435	A435P42YZQ		
T15- 233	A233M1D9V30B	T18- 334	A334L44YZQ	T21- 121	A121L01YZQ		
234	A234M1D9V30B	421	A421L44YZQ	123	A123L01YZQ		
235	A235M1D9V30B	423	A423L44YZQ	126	A126L01YZQ		
T16- 121	A121M1D9V60B	427	A427L44YZQ	127	A127L01YZQ		
123	A123M1D9V60B	431	A431L44YZQ	131	A131L01YZQ		
T16- 126	A126M1D9V60B	T18- 432	A432L44YZQ	T21- 134	A134L01YZQ		
127	A127M1D9V60B	433	A433L44YZQ	221	A221L01YZQ		
131	A131M1D9V60B	434	A434L44YZQ	223	A223L01YZQ		
134	A134M1D9V60B	435	A435L44YZQ	226	A226L01YZQ		
221	A221M1D9V60B	T19- 121	A121P12YZQ	227	A227L01YZQ		
T16- 223	A223M1D9V60B	T19- 123	A123P12YZQ	T21- 231	A231L01YZQ		
226	A226M1D9V60B	126	A126P12YZQ	232	A232L01YZQ		
227	A227M1D9V60B	127	A127P12YZQ	233	A233L01YZQ		
231	A231M1D9V60B	131	A131P12YZQ	234	A234L01YZQ		
232	A232M1D9V60B	134	A134P12YZQ	235	A235L01YZQ		
T16- 233	A233M1D9V60B	T19- 221	A221P12YZQ	T21- 321	A321L01YZQ		
234	A234M1D9V60B	223	A223P12YZQ	323	A323L01YZQ		
235	A235M1D9V60B	226	A226P12YZQ	327	A327L01YZQ		
T17- 121	A121L34YZQ	227	A227P12YZQ	331	A331L01YZQ		
123	A121L34YZQ	231	A231P12YZQ	334	A334L01YZQ		

*** EATON PART NUMBERS ARE NOW ELECTROSWITCH PART NUMBERS.**

Toggle Switch Cross Reference
C&K to Electroswitch

STANDARD TOGGLE SWITCHES

BASIC SWITCH			OPTIONAL FEATURE CODES											
C&K		Electroswitch	Actuator & Finish		Anti-Rotation		Bushing Styles		Termination		Contact Materials		Other ❹	
Std.	U.L. ❶		C&K	Electroswitch	C&K	Electroswitch	C&K	Electroswitch	C&K	Electroswitch	C&K	Electroswitch	C&K	Electroswitch
7101	U11	A123	K1	K12	P	❸ See Below	CW	CW	A	A	B	B	E	❻
7103	U13	A121	L	L01				CX	AV	AV ❼				
7105	U15	A127	L1	L11			D	D	AV2	AV2 ❼	G	G		
7107	U17	A131	L2	L21			D9	D9	C	C	Q	Q		
7108	U18	A126	L3	L34			H	H	R	R	K	K ❽	❸	P ❸
7109	U19	A134	L3 ❷ (Red)	L35			H3	H3	R2	R2	L	L ❽		
7201	U21	A223	L3 ❷ (White)	L36			CW	K	V30	V30	M	M ❽		
7203	U23	A221	M	M1			CW	TW ❺	V40	V40				
7205	U25	A227	P1	P11			Y	TX ❺	V60	V60				
7207	U27	A231	P3	P31			Y9	Y	V70	V70				
7208	U28	A226	P4	P41				Y5	W	W				
7209	U29	A234	S	S1				Y9	W1	W1				
7211	U211	A232	T	T1					W3	W3				
7213	U213	A233	T1	T11					W4	W4				
7215	U215	A235							Z	Z				
7301	U31	A323							Z3	Z3				
7303	U33	A321												
7305	U35	A327												
7307	U37	A331												
7308	U38	N/A												
7309	U39	A334												
7401	U41	A423												
7403	U43	A421												
7405	U45	A427												
7407	N/A	A431												
7408	U48	N/A												
7409	U49	A434												
7411	U411	A432												
7412	U413	A433												
7415	U415	A435												

❶ Electroswitch part numbers are supplied U.L. Approved as standard on switches with Q and G options.
❷ The color descriptions are spelled out at the end of the C&K part number. Ex. 7101L3YZQ with red handle.
❸ The Electroswitch code for anti-rotation (P) is found at the end of the Electroswitch part number. Not available on T or T1.
❹ Other options include anti-rotation feature for Electroswitch.
❺ Corresponds with sealed bushing version for T or T1 Actuator. See page 40.
❻ Epoxy seal standard on all terminal options.
❼ Verify momentary position on '26', '31', and '33' circuits. See pages 38 and 42 Pos. "C" or consult factory.
❽ See page 38.

SELECTION GUIDE

Ordering Number

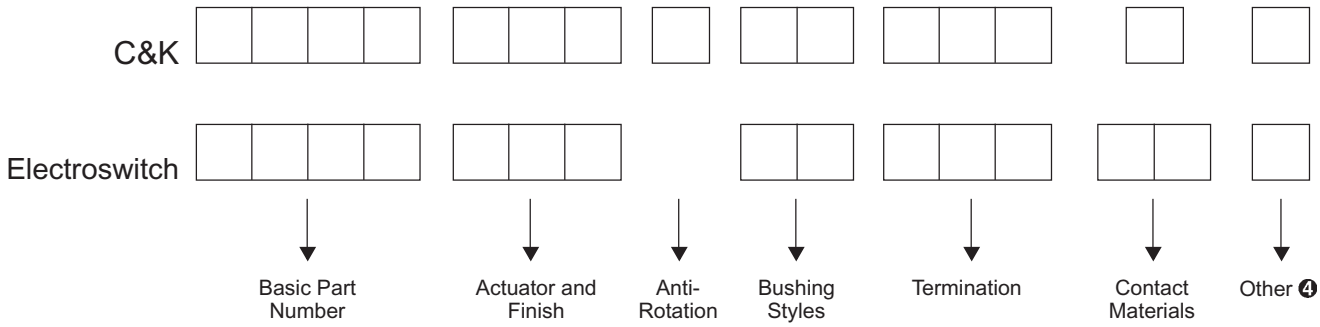

Rocker Switch Cross Reference
C&K to Electroswitch

STANDARD ROCKER AND PADDLE SWITCHES

BASIC SWITCH			OPTIONAL FEATURE CODES													
C&K		Electroswitch	Actuators		Terminations		Contact Materials		Sealing		Actuator Color		Frame or Bezels		Other	
Std.	U.L. ❶		C&K	Electroswitch	C&K	Electroswitch	C&K	Electroswitch	C&K	Electroswitch	C&K	Electroswitch	C&K	Electroswitch	C&K	Electroswitch
7101	U11	B123	J1 ❷	J1	A	A	B	B	E		White	1	White ❸	1P	E	❻
7103	U13	B121	J2 ❷	J2	AV	AV1 ❼	G	G			Black (Std.)	2	Black (Std.) ❸	2P		
7105	U15	B127	J3 ❷	J3	AV2	AV2 ❼	Q	Q			Red	3	Red ❸	3P		
7107	U17	B131	J5 ❷	J5	C	C	K	K ❽			Green	5	Black w/ L. E. D. Hole ❸	4P		
7108	U18	B126	J11 ❸	J11	V3	V3	L	L ❽			Blue	6	Green ❸	5P		
7109	U19	B134	J21 ❸	J21	V4	V4	M	M ❽			Light Gray	8	Blue ❸	6P		
7201	U21	B223	J37	J37	V5	V5					Yellow	9	Bright Gray ❸	8P		
7203	U23	B221	J47	J47	V6	V6					Dark Gray	0	Yellow ❸	9P		
7205	U25	B227	J50 ❷	J50	V7	V7							Dark Gray ❸	0P		
7207	U27	B231	J51 ❸	J50 ❹	W	W							Bright Chrome ❸	1M		
7208	U28	B226	J52 ❸	J50 ❺	W1	W1							Black (Std.) ❸	2M		
7209	U29	B234	J53 ❷	J53	W3	W3							Satin Chrome ❸	3M		
7211	U211	B232	J60 ❷	J60	W4	W4										
7213	U213	B233	J61 ❸	J60 ❹	Z	Z										
7215	U215	B235	J62 ❸	J60 ❺	Z3	Z3										
7301	U31	B323	J63 ❷	J63												
7303	U33	B321														
7305	U35	B327														
7307	U37	B331														
7308	U38	N/A														
7309	U39	B334														
7401	U41	B423														
7403	U43	B421														
7405	U45	B427														
7407	N/A	B431														
7408	U48	N/A														
7409	U49	B434														
7411	U411	B432														
7412	U413	B433														
7415	U415	B435														

❶ Electroswitch part numbers are supplied U.L. Approved as standard on switches with Q and G options.
❷ A complete C&K part number includes in **Word Form** an actuator color at the end of the part number. If none is indicated a black actuator will be supplied as standard. Ex. 7101J2ZB with red actuator is Electroswitch part number B123J2ZB3.
❸ A complete C&K part number includes in **Word Form** an actuator color and bezel color at the end of the part number. If none is indicated a black actuator and bezel will be supplied as standard. Ex. 7101J51CBE with white actuator and red frame is Electroswitch part number B123J50CB22P.
❹ A complete Electroswitch part number must include one of the following bezel codes. 1P, 2P, 3P, 5P, 6P, 8P, 9P, 0P.
❺ A complete Electroswitch part number must include bezel code 4P.
❻ Epoxy is standard on all terminal options.
❼ Verify momentary position on '26', '31', and '33' circuits. See pages 24 and 30 Pos. "C" or consult factory.
❽ See page 24.

SELECTION GUIDE

Ordering Number

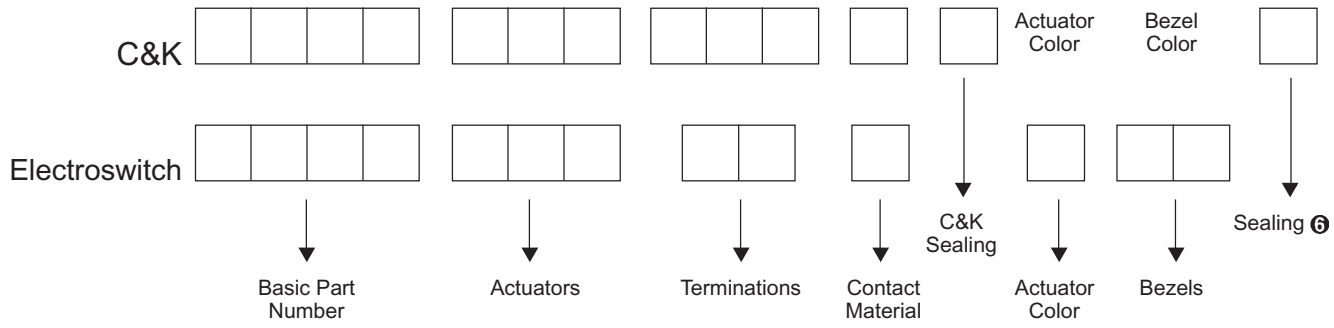

Toggle Switch Cross Reference
ALCO & C&K to Electroswitch

WASHABLE TOGGLE SWITCHES

BASIC SWITCH			OPTIONAL FEATURE CODES									
			Actuator & Finish		Bushing Styles		Termination		Contact Materials		Other	
ALCO	C&K	Electroswitch 5	ALCO & C&K	Electroswitch	ALCO & C&K	Electroswitch	ALCO & C&K	Electroswitch	ALCO & C&K	Electroswitch	ALCO & C&K	Electroswitch
AE101 AE103 AE105 AE107 AE108	E101 E103 E105 E107 E108	WT123 WT121 WT127 WT131 WT126	L ❶ L1 ❶ L2 ❶ L3 ❷ — M S	L01 L11 L21 L34 ❸ L44 ❸ M1 S1	D1 — Y ❷ —	D1 D9 Y Y9	A AV2 C V3 V30 W W1 W3 W4 W5 Z Z3	A AV2 ❼ C V3 V30 W W1 W3 W4 — Z Z3	B G Q K L M	B G Q K ❻ L ❻ M ❻	E ❷	❹
AE201 AE203 AE205 AE207 AE208	E201 E203 E205 E207 E208	WT223 WT221 WT227 WT231 WT226										
AE211 AE213 AE215	E211 — E215	WT232 WT233 WT235										

❶ ALCO only.
❷ C&K only.
❸ Black std. See catalog for other colors.
❹ Epoxy is standard on all terminal options for Electroswitch & ALCO.
❺ Electroswitch part numbers are supplied U.L. approved as standard on switches with Q and G options.
❻ See page 44.
❼ Verify momentary position on '26', '31', and '33' circuits. See pages 44 and 47 Pos. "C" or consult factory.

Rocker Switch Cross Reference
ALCO & C&K to Electroswitch

WASHABLE ROCKER/PADDLE SWITCHES

BASIC SWITCH			OPTIONAL FEATURE CODES									
			Actuators		Terminations		Contact Materials		Sealing		Actuator Color	
ALCO	C&K	Electroswitch 1	ALCO & C&K	Electroswitch	ALCO & C&K	Electroswitch	ALCO & C&K	Electroswitch	ALCO & C&K	Electroswitch	ALCO & C&K	Electroswitch
AE101 AE103 AE105 AE107 AE108	E101 E103 E105 E107 E108	WP 123 (Paddle) 121 or 127 WR 131 (Rocker) 126	J1 J2 J50 J60 J90 ❸	J1 ❷ or J71 ❷ J2 ❷ or J72 ❷ J76 ❷ J77 ❷ —	A AV2 C V3 W W1 W3 W4 Z Z3	A AV2 ❺ C V3 W W1 W3 W4 Z Z3	B G Q K L M	B G Q K ❻ L ❻ M ❻	E ❸	❹	White Black (Std.) Red Green	1 2 3 5
AE201 AE203 AE205 AE207 AE208 AE211 AE213 AE215	E201 E203 E205 E207 E208 E211 E215	WP 223 221 (Paddle) 227 Or 231 WR 226 232 (Rocker) 233 235										

❶ Electroswitch part numbers are supplied U.L. Approved as standard on switches with Q and G options.
❷ J1, J2 used with C, Z, Z3, W-W4 terminations. J71, J72, J76, J77 used with A, AV2, V3 terminations.
❸ C&K only.
❹ Epoxy is standard on all terminal options for Electroswitch & ALCO.
❺ Verify momentary position on '26', '31', and '33' circuits. See pages 32 and 35 Pos. "C" or consult factory.
❻ See page 32.

STANDARD MINIATURE SWITCHES

ALCO Part No.	Electroswitch Part No.
MDS-106D-50-0	B123J50ZQ2
MDS-106D-50	B123J50ZQ ❶
MDS-106D-60-0	B123J60ZQ2
MDS-106D-60	B123J60ZQ ❶
MDS-106E-50-0	B121J50ZQ2
MDS-106E-50	B121J50ZQ ❶
MDS-106E-60-0	B121J60ZQ2
MDS-106E-60	B121J60ZQ ❶
MDS-106E-50-0	B126J50ZQ2
MDS-106F-50	B126J5ZQ ❶
MDS-106F-60-0	B126J60ZQ2
MDS-106F-60	B126J60ZQ ❶
MDS-206N-50-0	B223J50ZQ2
MDS-206N-50	B223J50ZQ ❶
MDS-206N-60-0	B223J60ZQ2
MDS-206N-60	B223J60ZQ ❶
MDS-206P-50-0	B221J50ZQ2
MDS-206P-50	B221J50ZQ ❶
MDS-206P-60-0	B221J60ZQ2
MDS-206P-60	B221J60ZQ ❶
MDS-206R-50-0	B226J50ZQ2
MDS-206R-50	B226J50ZQ ❶
MDS-206R-60-0	B226J60ZQ2
MDS-206R-60	B226J60ZQ ❶
MHL-106D-10M-0	B123J1ZQ2
MHL-106D-10M	B123J1ZQ ❶
MHL-106D-20M-0	B123J2ZQ2
MHL-166D-20M	B123J2ZQ ❶
MHL-106E-20M-0	B121J2ZQ2
MHL-106E-20M	B121J2ZQ ❶
MHL-106F-10M-0	B126J1ZQ2
MHL-106F-10M	B126J1ZQ ❶
MHL-106F-20M-0	B126J2ZQ2
MHL-106F-20M	B126J2ZQ ❶
MHL-206N-10M-0	B223J1ZQ2
MHL-206N-10M	B223J1ZQ ❶
MHL-206N-20M-0	B223J2ZQ2
MHL-206N-20M	B223J2ZQ ❶
MHL-206P-20M-0	B221J2ZQ2
MHL-206P-20M	B221J2ZQ ❶
MHL-206R-10M-0	B226J1ZQ2
MHL-206R-10M	B226J1ZQ ❶
MHL-206R-20M-0	B226J2ZQ2
MHL-206R-20M	B226J2ZQ ❶
MHL-306D-10M-0	B323J1ZQ2
MHL-306D-10M	B323J1ZQ ❶
MHL-306D-20M-0	B323J2ZQ2
MHL-306D-20M	B323J2ZQ ❶
MHL-306F-10M-0	B326J1ZQ2
MHL-306F-10M	B326J1ZQ ❶
MHL-306F-20M-0	B326J2ZQ2
MHL-306F-20M	B326J2ZQ ❶
MHL-406N-10M-0	B423J1ZQ2
MHL-406N-10M	B423J1ZQ ❶
MHL-406N-20M-0	B423J2ZQ2
MHL-406N-20M	B423J2ZQ ❶

ALCO Part No.	Electroswitch Part No.
MHV-106D-PC-10-0M	B123J71V3Q2
MHV-106D-PC-10M	B123J71V3Q ❶
MHV-106D-PC-20-0M	B123J72V3Q2
MHV-106D-PC-20M	B123J72V3Q ❶
MHV-106E-PC-20-0M	B121J72V3Q2
MHV-106E-PC-20M	B121J72V3Q ❶
MHV-106F-PC-10-0M	B126J71V3Q2
MHV-106F-PC-10M	B126J71V3Q ❶
MHV-106F-PC-20-0M	B126J72V3Q2
MHV-106F-PC-20M	B126J72V2Q ❶
MHV-206N-PC-10-0M	B223J71V3Q2
MHV-206N-PC-10M	B223J71V3Q ❶
MHV-206N-PC-20-0M	B223J72V3Q2
MHV-206N-PC-20M	B223J72V3Q ❶
MHV-206P-PC-20-0M	B221J72V3Q2
MHV-206P-PC-20M	B221J72V3Q ❶
MHV-206R-PC-10-0M	B226J71V3Q2
MHV-206R-PC-10M	B226J71V3Q ❶
MHV-206R-PC-20-0M	B226J72V3Q2
MHV-206R-PC-20M	B226J72V3Q ❶
MLD-106D-70-0	B123J50ZQ2
MLD-106D-70	B123J50ZQ ❶
MLD-106D-80-0	B123J60ZQ2
MLD-106D-80	B123J60ZQ ❶
MLD-106E-70-0	B121J50ZQ2
MLD-106E-70	B121J50ZQ ❶
MLD-106E-80-0	B121J60ZQ2
MLD-106E-80	B121J60ZQ ❶
MLD-106F-70-0	B126J50ZQ2
MLD-106F-70	B126J50ZQ ❶
MLD-106F-80-0	B126J60ZQ2
MLD-106F-80	B126J60ZQ ❶
MLD-206N-70-0	B223J50ZQ2
MLD-206N-70	B223J50ZQ ❶
MLD-206N-80-0	B223J60ZQ2
MLD-206N-80	B223J60ZQ ❶
MLD-206P-70-0	B221J50ZQ2
MLD-206P-70	B221J50ZQ ❶
MLD-206P-80-0	B221J60ZQ2
MLD-206P-80	B221J60ZQ ❶
MLD-206R-70-0	B226J50ZQ2
MLD-206R-70	B226J50ZQ ❶
MLD-206R-80-0	B226J60ZQ2
MLD-206R-80	B226J60ZQ ❶
MNL-206 ❸	SC12CWN1 ❸
MNL-206P ❸	SC12BWN1 ❸
MNL-206R ❸	SC12GWN1 ❸
MPA-106D	PB-12331ZQ ❷
MPA-106F	PB-12631ZQ ❷
MPE-106D	PBW-12331ZQ ❷
MPE-106F	PBW-12631ZQ ❷

❸ Add Color of Rocker Code as Follows

Red — 2	92
Amber — 4	94
Green — 5	93
While — 9	91

ALCO Part No.	Electroswitch Part No.
MPS-103F	PS1-100Q
MPS-103F-PC	PS2-100G
MPS-103F-PCV	PS71-100Q
MPS-103F-RA	PS9-100Q
MPS-203R	PS1-200Q
MPS-203R-PC	PS2-200G
MPS-203R-PCV	PS71-200Q
MPS-203R-RA	PS9-200Q
MPSR-103F	PS14-100G
MPSR-203R	PS14-200G

NOTE — Pushbutton caps and bezels are ordered separately below and are not exactly interchangeable. Also the panel cut out for MPSR is NOT tHe same as C-H.

C220	W-KN-17
C222	W-KN-17B
C229	W-KN-17A
C330	W-KN-18
C332	W-KN-18B
C339	W-KN-18A
SDR	W-BZ-12

ALCO Part No.	Electroswitch Part No.
MRL-106D-30M-0	B123J3ZQ2
MRL-106D-30M	B123J3ZQ ❶
MRL-106D-40M-0	B123J5ZQ2
MRL-106D-40M	B123J5ZQ ❶
MRL-106E-30M-0	B121J3ZQ2
MRL-106E-30M	B121J3ZQ ❶
MRL-106E-40M-0	B121J5ZQ2
MRL-106E-40M	B121J5ZQ ❶
MRL-106F-30M-0	B126J3ZQ2
MRL-106F-30M	B126J3ZQ ❶
MRL-106F-40M-0	B126J5ZQ2
MRL-106F-40M	B126J5ZQ ❶
MRL-206N-30M-0	B223J3ZQ2
MRL-206N-30M	B223J3ZQ ❶
MRL-206N-40M-0	B223J5ZQ2
MRL-206N-40M	B223J5ZQ ❶
MRL-206P-30M-0	B221J3ZQ2
MRL-206P-30M	B221J3ZQ ❶
MRL-206P-40M-0	B221J5ZQ2
MRL-206P-40M	B221J5ZQ ❶
MRL-206R-30M-0	B226J3ZQ2
MRL-206R-30M	B226J3ZQ ❶
MRL-206R-40M-0	B226J5ZQ2
MRL-206R-40M	B226J5ZQ ❶
MRL-306D-30M-0	B323J3ZQ2
MRL-306D-30M	B323J3ZQ ❶
MRL-306D-40M-0	B323J5ZQ2
MRL-306D-40M	B323J5ZQ ❶
MRL-406N-30M-0	B423J3ZQ2
MRL-406N-30M	B423J3ZQ ❶
MRL-406N-40M-0	B423J5ZQ2
MRL-406N-40M	B423J5ZQ ❶
MRV-106D-PC-30M-0	B123J73V3Q2
MRV-1060-PC-30M ❶	B123J73V3Q ❶
MRV-106D-PC-40M-0	B123J75V3Q2
MRV-106D-PC-40M ❶	B123J75V3Q ❶
MRV-106E-PC-30M-0	B121J73V3Q2

ALCO Part No.	Electroswitch Part No.
MRV-106E-PC-30M ❶	B121J73V3Q ❶
MRV-106E-PC-40M-0	B121J75V3Q2
MRV-106E-PC-40M ❶	B121J75V3Q ❶
MRV-106F-PC-30M-0	B126J73V3Q2
MRV-106F-PC-30M ❶	B126J73V3Q ❶
MRV-106F-PC-40M-0	B126J75V3Q2
MRV-106F-PC-40M ❶	B126J75V3Q ❶
MRV-206N-PC-30M-0	B223J73V3Q2
MRV-206N-PC-30M ❶	B223J73V3Q ❶
MRV-206N-PC-40M-0	B223J75V3Q2
MRV-206N-PC-40M ❶	B223J75V3Q ❶
MRV-206P-PC-30M-0	B221J73V3Q2
MRV-206P-PC-30M ❶	B221J73V3Q ❶
MRV-206P-PC-40M-0	B221J75V3Q2
MRV-206P-PC-40M ❶	B221J75V3Q ❶
MRV-206R-PC-30M-0	B226J73V3Q2
MRV-206R-PC-30M ❶	B226J73V3Q ❶
MRV-206R-PC-40M-0	B226J75V3Q2
MRV-206R-PC-40M ❶	B226J75V3Q ❶
MSP-105D	PB-12331ZQ ❷
MSP-105F	PB-12631ZQ ❷
MST-105D	A123S1YZQ
MST-105E	A121S1YZQ
MST-105F	A134S1YZQ
MST-105G	A127S1YZQ
MST-105H	A131S1YZQ
MST-115D	A123S1YZQ w/W-CAP-10A
MST-205N	A223S1YZQ
MST-205P	A221S1YZQ
MST-205PA	A232S1YZQ
MST-205R	A234S1YZQ
MST-205S	A227S1YZQ
MST-205SA	A235S1YZQ
MST-205T	A231S1YZQ
MST-205TA	A233S1YZQ
MST-215N	A223S1YZQ w/W-CAP-10A
MST-305D	A323S1YZQ
MST-305E	A321S1YZQ
MST-305F	A334S1YZQ
MST-305H	A331S1YZQ
MST-315D	A323S1YZQ w/W-CAP-10A
MST-405N	A423S1YZQ
MST-405P	A421S1YZQ
MST-415N	A423S1YZQ w/W-CAP-10A
MST-105D-PC	A123S1YCQ
MST-105E-PC	A121S1YCQ
MST-105F-PC	A126S1YCQ
MST-205N-PC	A223S1YCQ
MST-205P-PC	A221S1YCQ
MST-205PA-PC	A232S1YCQ

NOTE: ALCO Series MHL, MHV, MLD, MPA, MHL, MRV, MTA, MTB, MTE, MTP, MTG, MTL and MTM have molded-in terminals. If application requires sealing, Electroswitch can supply epoxy sealed terminals. Refer to Standard Option tables on pages 24 and 38 to determine correct part number.

❶ Refer to ordering table on page 24 for additional actuator colors and bezels.

❷ Depth behind panel not the same as ALCO.

Alcoswitch to Electroswitch Cross Reference

STANDARD MINIATURE SWITCHES

ALCO Part No.	Electroswitch Part No.
MTA-106D	A123S1YZQ
MTA-106D-PC	A123S1YCQ
MTA-106D-RA	A123M1DAQ
MTA-106D-VRA	A123M1DAVQ
MTA-106D-WW	A123S1YWB
MTA-106E	A121S1YZQ
MTA-106E-PC	A121S1YCQ
MTA-106E-RA	A121M1DAQ
MTA-106E-VRA	A121M1DAVQ
MTA-106E-WW	A121S1YWB
MTA-106F	A126S1YZQ
MTA-106F-PC	A126S1YCQ
MTA-106F-RA	A126M1DAQ
MTA-106F-VRA	A126M1DAVQ ❶
MTA-106G	A127S1YZQ
MTA-106G-PC	A127S1YCQ
MTA-106H	A131S1YZQ
MTA-106H-PC	A131S1YCQ
MTA-206N	A223S1YZQ
MTA-206N-PC	A223S1YCQ
MTA-206N-RA	A223M1DAQ
MTA-206N-VRA	A223M1DAVQ
MTA-206N-WW	A223S1YWB
MTA-206P	A221S1YZQ
MTA-206P-PC	A221S1YCQ
MTA-206P-RA	A221M1DAQ
MTA-206P-VRA	A221M1DAVQ
MTA-206P-WW	A221S1YWB
MTA-206PA	A232S1YZQ
MTA-206PA-PC	A232S1YCQ
MTA-206R	A226S1YZQ
MTA-206R-PC	A226S1YCQ
MTA-206R-RA	A226M1DAQ
MTA-206R-VRA	A226M1DAVQ ❶
MTA-206S	A227S1YZQ
MTA-206S-PC	A227S1YCQ
MTA-206SA	A235S1YZQ
MTA-206SA-PC	A235S1YCQ
MTA-206T	A231S1YZQ
MTA-206T-PC	A231S1YCQ

ALCO Part No.	Electroswitch Part No.
MTA-206TA	A233S1YZQ
MTA-306D	A323S1YZQ
MTA-306D-PC	A323S1YCQ
MTA-306D-WW	A323S1YWB
MTA-306E	A321S1YZQ
MTA-306E-PC	A321S1YCQ
MTA-306G	A331S1YZQ
MTA-306H-PC	A331S1YCQ
MTA-406N	A423S1YZQ
MTA-406N-PC	A423S1YCQ
MTA-406N-WW	A423S1YWB
MTA-406P	A421S1YZQ
MTA-406P-PC	A421S1YCQ
MTA-406PA	A432S1YZQ
MTA-406PA-PC	A432S1YCQ
MTB-106D	A123L44YZQ
MTB-106E	A121L44YZQ
MTB-106F	A126L44YZQ
MTB-106G	A127L44YZQ
MTB-106H	A131L44YZQ
MTB-206N	A223L44YZQ
MTB-206P	A221L44YZQ
MTB-206PA	A232L44YZQ
MTB-206R	A226L44YZQ
MTB-206S	A227L44YZQ
MTB-206T	A231L44YZQ
MTB-306D	A323L44YZQ
MTB-406D	A423L44YZQ
MTE-106D	A123S1CWZQ
MTE-106E	A121S1CWZQ
MTE-106F	A126S1CWZQ
MTE-106G	A127S1CWZQ
MTE-106H	A131S1CWZQ
MTE-206N	A223S1CWZQ
MTE-206P	A221S1CWZQ
MTE-206PA	A232S1CWZQ
MTE-206R	A226S1CWZQ
MTE-206S	A227S1CWZQ
MTE-206T	A231S1CWZQ
MTE-306D	A323S1CWZQ

ALCO Part No.	Electroswitch Part No.
MTE-306E	A321S1CWZQ
MTE-406N	A423S1CWZQ
MTE-406P	A421S1CWZQ
MTF-106D	A123P32YZQ
MTF-106E	A121P32YZQ
MTF-106F	A126P32YZQ
MTF-106G	A127P32YZQ
MTF-106H	A131P32YZQ
MTF-126D	A123P31YZQ
MTF-126E	A121P31YZQ
MTF-126F	A126P31YZQ
MTF-126G	A127P31YZQ
MTF-126H	A131P31YZQ
MTF-206N	A223P32YZQ
MTF-206P	A221P32YZQ
MTF-206PA	A232P32YZQ
MTF-206R	A226P32YZQ
MTF-206S	A227P32YZQ
MTF-206SA	A235P32YZQ
MTF-206T	A231P32YZQ
MTF-226N	A223P31YZQ
MTF-226P	A221P31YZQ
MTF-226PA	A233P31YZQ
MTF-226R	A226P31YZQ
MTF-226S	A227P31YZQ
MTF-226SA	A235P31YZQ
MTF-226T	A231P31YZQ
MTF-306N	A323P32YZQ
MTF-326N	A323P31YZQ
MTF-406N	A423P32YZQ
MTF-426N	A423P31YZQ
MTG-106D	A123T11TZQ
MTG-106E	A121T11TZQ
MTG-206N	A223T11TZQ
MTG-206N-PC	A223T11TCQ
MTG-206P	A221T11TZQ
MTG-306D	A323T11TZQ
MTG-406N	TA423T11TZQ

ALCO Part No.	Electroswitch Part No.
MTL-106D	A123K12KZQ
MTL-106E	A121K12KZQ
MTL-206N	A223K12KZQ
MTL-206P	A221K12KZD
MTL-206PA	A232K12KZQ
MTL-306D	A323K12KZQ
MTL-406N	A423K12KZQ
MTL-406PA	A432K12KZQ
MTM-106D-PC	A123M1DCQ
MTM-106D-RA	A123M1D9AQ
MTM-106D-VRA	A123M1D9AVQ
MTM-106E-PC	A121M1DCQ
MTM-106E-RA	A121M1D9AQ
MTM-106E-VRA	A121M1D9AVQ
MTM-106F-PC	A126M1DCQ
MTM-106F-RA	A126M1D9AQ
MTM-106F-VRA	A126M1D9AVQ ❶
MTM-106G-PC	A127M1DCQ
MTM-106H-PC	A131M1DCQ
MTM-206N-PC	A223M1DCQ
MTM-206N-BA	A223M1D9AQ
MTM-206N-VRA	A223M1D9AVQ
MTM-206P-PC	A221M1DCQ
MTM-206P-RA	A221M1D9AQ
MTM-206P-VRA	A221M1D9AVQ
MTM-206PA-PC	A233M1DCQ
MTM-206R-PC	A226M1DCQ
MTM-206R-RA	A226M1D9AQ
MTM-206R-VRA	A226M1D9AVQ ❶
MTM-206S-PC	A227M1DCQ
MTM-206T-PC	A231M1DCQ
MTM-306D-PC	A323M1DCQ
MTM-406N-PC	A423M1DCQ

NOTE: ALCO Series MHL, MHV, MLD, MPA, MRL, MRV, MTA, MTB, MTE, MTF, MTG, MTL and MTM have molded-in terminals. If application requires sealing, Electroswitch can supply epoxy sealed terminals. Refer to Standard Option tables on pages 24 and 38 to determine correct part number.

❶ Momentary position opposite that of ALCO. See Note ❼ on page 64.

Alcoswitch to Electroswitch Cross Reference

WASHABLE MINIATURE SWITCHES

ALCO Part No.	Electroswitch Part No.
AE101J1AB0	WR123J71AB2
AE101J1AV2B0	WR123J71AV2B2
AE101J1V3B0	WR123J71V3B2
AE101J1ZQ0	WR123J1ZQ2
AE101J2AB0	WP123J72AB2
AE101J2AV2B0	WP123J72AV2B2
AE101J2V3B0	WP123J72V3B2
AE101J2ZQ0	WP123J2ZQ2
AF101LD1ZQ	WT123L01D1ZQ
AE101L1D1ZQ	WT123L11D1ZQ
AE101L2D1ZQ	WT123L21D1ZQ
AE101MD1AB	WT123M1D1AB
AE101MD1AV2B	WT123M1D1AV2B
AE101MD1V30B	WT123M1D1V30B
AE101MD1ZQ	WT123M1D1ZQ

ALCO Part No.	Electroswitch Part No.
AE101SD1AB	WT123S1D1AB
AE101SD1AV2B	WT123S1D1AV2B
AE101SD1V30B	WT123S1D1V30B
AE101SD1ZQ	WT123S1D1ZQ
AE103J1AB0	WR121J71AB2
AE103J1AV2B0	WR121J71AV2B2
AE103J1V3B0	WR121J71V3B2
AE103J1ZQ0	WR121J1ZQ2
AE103J2AB0	WP121J72AB2
AE103J2AV2B0	WP121J72AV2B2
AE103J2V3B0	WP121J72V3B2
AE103J2ZQ0	WP121J2ZQ2
AE103LD1ZQ	WT121L01D1ZQ
AE103L1D1ZQ	WT121L11D1ZQ
AE103L2D1ZQ	WT121L21D1ZQ

ALCO Part No.	Electroswitch Part No..
AE103MD1AB	WT121M1D1AB
AE103MDAV2B	WT121M1D1AV2B
AE103MDV30B	WT121M1D1V30B
AE103MDZQ	WT121M1D1ZQ
AE103SD1AB	WT121S1D1AB
AE103SD1AV2B	WT121S1D1AV2B
AE103SD1V30B	WT121S1D1V30B
AE103SD1ZQ	WT121S1D1ZQ
AE105J1AB0	WR127J71AB2
AE105J1AV2B0	WR127J71AV2B2
AE105J1V3B0	WR127J71V3B2
AE105J1ZQ0	WR127J1ZQ2
AE105J2AB0	WP127J72AB2
AE105J2AV2B0	WP127J72AV2B2
AE105J2V3B0	WP127J72V3B2

ALCO Part No.	Electroswitch Part No.
AE105J2ZQ0	WP127J2ZQ2
AE105LD1ZQ	WT127L01D1ZQ
AE105L1D1ZQ	WT127L11D1ZQ
AE105L2D1ZQ	WT127L21D1ZQ
AE105MD1AB	WT127M1D1AB
AE105MD1AV2B	WT127M1D1AV2B
AE105MD1V30B	WT127M1D1V30B
AE105MD1ZQ	WT127M1D1ZQ
AE105SD1AB	WT127S1D1AB
AE105SD1AV2B	WT127S1D1AV2B
AE105SD1V30B	WT127S1D1V30B
AE105SD1ZQ	WT127S1D1ZQ
AE107J1AB0	WR131J71AB2
AE107J1AV2B0	WR131J71AV2B2 ❶
AE107J1V3B0	WR131J71V3B2

❶ Momentary position opposite that of ALCO. See Notes ❺ or ❼ on page 66.

WASHABLE MINIATURE SWITCHES

ALCO Part No.	Electroswitch Part No.	ALCO Part No.	Electroswitch Part No.	ALCO Part No.	Electroswitch Part No..	ALCO Part No.	Electroswitch Part No.
AE107J12Q0	WR131J1ZQ2	AE203J1AV2B0	WR221J71AV2B2	AE207SD1ZQ	WT231S1D1ZQ	AE213SD1AV2B	WT233S1D1AV2B ❶
AE107J2AB0	WP131J72AB2	AE203J1V3B0	WR221J71V3B2	AE208J1AB0	WR226J71AB2	AE213SD1V30B	WT233S1D1V30B
AE107J2AV2B0	WP131J72AV2B2 ❶	AE203J1ZQ0	WR221J1ZQ2	AE208J1AV2B0	WR226J71AV2B2 ❶	AE213SD1ZQ	WT233S1D1ZQ
AE107J2V3B0	WP131J72V3B2	AE203J2AB0	WP221J72AB2	AE208J1V3B0	WR226J71V3B2	AE215J1AB0	WR235J71AB2
AE107J2ZQ0	WP131J2ZQ2	AE203J2AV2B0	WP221J72AV2B2	AE208J1ZQ0	WR226J1ZQ2	AE215J1AV2B0	WR235J71AV2B
AE107LD1ZQ	WT131L01D1ZQ	AE203J2V2B0	WP221J72V3B2	AE208J2AB0	WP226J72AB2	AE215J1V3B0	WR235J1V3B2
AE107L1D1ZQ	WT131L11D1ZQ	AE203L2ZQ0	WP221J2ZQ	AE208J2AV2B0	WP226J72AV2B2 ❶	AE215J1ZQ0	WR235J1ZQ2
AE107L2D1ZQ	WT131L21D1ZQ	AE203LD1ZQ	WT221L01D1ZQ	AE208J2V3B0	WP226J72V3B2	AE215J2AB0	WP235J2AB2
AE107MD1AB	WT131M1D1AB	AE203L1D1ZQ	WT221L11D1ZQ	AE208J2ZQ0	WP226J2ZQ2	AE215J2AV2B0	WP235J2AV2B2
AE107MD1AV2B	WT131M1D1AV2B ❶	AE203L2D1ZQ	WT221L21D1ZQ	AE208LD1ZQ	WT226L01Q1ZQ	AE215J2V3B0	WP235J2V38
AE107MD1V30B	WT131M1D1V30B	AE203MD1AB	WT221M1D1AB	AE208L1D1ZQ	WT226L11D1ZQ	AE215J2ZQ0	WP235J2ZQ2
AE107MD1ZQ	WT131M1D1ZQ	AE203MDAV2B	WT221M1D1AV2B	AE208L2D1ZQ	WT226L21D1ZQ	AE215LD1ZQ	WT235L01D1ZQ
AE107SD1AB	WT131S1D1AB	AE203MDV30B	WT221M1D1V30B	AE208MD1AB	WT226M1D1AB	AE215L1D1ZQ	WT235L11D1ZQ
AE107SD1AV2B	WT131S1D1AV2B ❶	AE203MDZQ	WT221M1D1ZQ	AE208MD1AV2B	WT226M1D1AV2B ❶	AE215L2D1ZQ	WT235L21D1ZQ
AE107SD1V30B	WT131S1D1V30B	AE203SD1AB	WT221S1D1AB	AE208MD1V30B	WT226M1D1V30B	AE215MD1AB	WT235M1D1AB
AE107SD1ZQ	WT131S1D1ZQ	AE203SD1AV2B	WT221S1D1AV2B	AE208MD1ZQ	WT126M1D1ZQ	AE215MD1AV2B	WT235M1D1AV2B
AE108J1AB0	WR126J71AB2	AE203SD1V30B	WT221S1D1V30B	AE208SD1AB	WT226S1D1AB	AE215MD1V30B	WT235M1D1V30B
AE108J1AV2B0	WR126J71AV2B2 ❶	AE203SD1ZQ	WT221S1D1ZQ	AE208SD1AV2B	WT226S1D1AV2B ❶	AE215MD1ZQ	WT235M1D1ZQ
AE108J1V3B0	WR126J71V3B2	AE205J1AB0	WR227J71AB2	AE208SD1V30B	WT226S1D1V30B	AE215SD1AB	WT235S1D1AB
AE108J1ZQ0	WR126J71ZQ2	AE205J1AV2B0	WR227J71AV2B2	AE208SD1ZQ	WT226S1D1ZQ	AE215SD1AV2B	WT235S1D1AV2B
AE108J2AB0	WP126J72AB2	AE205J1V3B0	WR227J71V3B2	AE211J1AB0	WT232J71AB2	AE215SD1V30B	WT235S1D1V30B
AE108J2AV2B0	WP126J72AV2B2 ❶	AE205J1ZQ0	WR227J1ZQ2	AE211J1AV2B0	WR232J71AV2B	AE215SD1ZQ	WT235S1D1ZQ
AE108J2V3B0	WP126J72V3B2	AE205J2AB0	WP227J72AB2	AE211J1V3B0	WR232J71V3B2		
AE108J2ZQ0	WP126J2ZQ2	AE205J2AV2B0	WP227J72AV2B2	AE211J1ZQ0	WR232J1ZQ2		
AE108LD1ZQ	WT126L01D1ZQ	AE205J2V3B0	WP227J72V3B2	AE211J2AB0	WP232J72AB2		
AE108L1D1ZQ	WT126L11D1ZQ	AE205J2ZQ0	WP227J2ZQ2	AE211J2AV2B0	WP232J72AV2B2		
AE108L2D1ZQ	WT126L21D1ZQ	AE205LD1ZQ	WT227L01D1ZQ	AE211J2V3B0	WP232J72V3B2		
AE108MD1AB	WT126M1D1AB	AE205L1D1ZQ	WT227L11D1ZQ	AE211J2ZQ0	WP232J2ZQ2		
AE108MD1AV2B	WT126M1D1AV2B ❶	AE205L2D1ZQ	WT227L21D1ZQ	AE211LD1ZQ	WT232L01D1ZQ		
AE108MD1V30B	WT126M1D1V30B	AE205MD1AB	WT227M1D1AB	AE211D1ZQ	WT232L11D1ZQ		
AE108MD1ZQ	WT126M1D1ZQ	AE205MD1AV2B	WT227M1D1AV2B	AE211L2D1ZQ	WT232L21D1ZQ		
AE108SD1AB	WT126S1D1AB	AE205MD1V30B	WT227M1D1V30B	AE211MD1AB	WT232M1D1AB		
AE108SD1AV2B	WT126S1D1AV2B ❶	AE205MD1ZQ	WT227M1D1ZQ	AE211MD1AV2B	WT232M1D1AV2B		
AE108SD1V30B	WT126S1D1V30B	AE205SD1AB	WT227S1D1AB	AE211MD1V30B	WT232M1D1V30B		
AE108SD1ZQ	WT126S1D1ZQ	AE205SD1AV2B	WT227S1D1AV2B	AE211MD1ZQ	WT232M1D1ZQ		
AE201J1AB0	WR223J71AB2	AE205SD1V30B	WT227S1D1V30B	AE211SD1AB	WT232S1D1AB		
AE201J1AV2B0	WT223J71AV2B2	AE205SD1ZQ	WT227S1D1ZQ	AE211SD1AV2B	WT232S1D1AV2B		
AE201J1V3B0	WR223J71V3B2	AE207J1AB0	WR231J71AB2	AE211SD1V30B	WT232S1D1V30B		
AE201J1ZQ0	WR223J1ZQ2	AE207J1AV2B0	WR231J71AV2B2	AE211SD1ZQ	WT232S1D1ZQ		
AE201J2AB0	WP223J72AB2	AE207J1V3B0	WR231J71V3B2	AE213J1AB0	WR233J71AB2		
AE201J2AV2B0	WP223J72AV2B2	AE207J1ZQ0	WR231J1ZQ2	AE213J1AV2B0	WR233J71AV2B2 ❶		
AE201J2V3B0	WP223J72V3B2	AE207J2AB0	WP231J72AB2	AE213J1V3B0	WR233J71V3B2		
AE201J2ZQ0	WP223J2ZQ2	AE207J2AV2B0	WP231J72AB2B2 ❶	AE213J1ZQ0	WR233J1ZQ2		
AE201LD1ZQ	WT223L01D1ZQ	AE207J2V3B0	WP231J72V3B2	AE213J2AB0	WP233J72AB2		
AE201L1D1ZQ	WT223L11D1ZQ	AE207J2ZQ0	WP231J2ZQ2	AE213J2AV2B0	WP233J72AV2B2 ❶		
AE201L2D1ZQ	WT223L21D1ZQ	AE207LD1ZQ	WT231L01D1ZQ	AE213J2V3B0	WP233J72V3B2		
AE201MD1AB	WT223M1D1AB	AE207L1D1ZQ	WT231L11D1ZQ	AE213J2ZQ0	WP233J2ZQ2		
AE201MD1AV2B	WT223M1D1AV2B	AE207L2D1ZQ	WT231L21D1ZQ	AE213LD1ZQ	WT233L01D1ZQ		
AE201MD1V30B	WT223M1D1V30B	AE207MD1AB	WT231M1D1AB	AE213L1D1ZQ	WT233L11D1ZQ		
AE201MD1ZQ	WT223M1D1ZQ	AE207MD1AV2B	WT231M1D1AV2B ❶	AE213L2D1ZQ	WT233L21D1ZQ		
AE201SD1AB	WT223S1D1AB	AE207MD1V30B	WT231M1D1V30B	AE213MD1AB	WT233M1D1AB		
AE201SD1AV2B	WT223S1D1AV2B	AE207MD1ZQ	WT231M1D1ZQ	AE213MD1AV2B	WT233M1D1AV2B ❶		
AE201SD1V30B	WT223S1D1V30B	AE207SD1AB	WT231S1D1AB	AE213MD1V30B	WT233M1D1V30B		
AE201SD1ZQ	WT223S1D1ZQ	AE207SD1AV2B	WT231S1D1AV2B ❶	AE213MD1ZQ	WT233M1D1ZQ		
AE203J1AB0	WR221J71AB2	AE207SD1V30B	WT231S1D1V30B	AE213SD1AB	WT233S1D1AB		

❶ Momentary position opposite that of ALCO. See Notes ❺ or ❼ on page 66.

C&K to Electroswitch Cross Reference

STANDARD MINIATURE SWITCHES

C&K Part No.	Electroswitch Part No.
5101ZQ	SC11CWN191
5103ZQ	SC11BWN191
5105ZQ	SC11JWN191
5107ZQ	SC11FWN191
5108ZQ	SC11GWN191
5201ZQ	SC12CWN191
5203ZQ	SC12BWN191
5205ZQ	SC12JWN191
5207ZQ	SC12FWN191
5208ZQ	SC12GWN191
5600ZB	SC12LWN191
7002	W-NU-11
7003-2	W-WA-20
7003-3	W-WA-16
7007	W-RI-12
7062 White	W-CAP-10A
7062 Black	W-CAP-10D
7062 Red	W-CAP-10C
7062 Orange	W-CAP-10F
7062 Yellow	W-CAP-10G
7062 Green	W-CAP-10H
7062 Blue	W-CAP-10B
7062 Brown	W-CAP-10E
7062 Grey	W-CAP-10J
7071	W-NU-10A
7072	W-RI-10
7089 White	W-KN-16A
7089 Black	W-KN-16
7089 Red	W-KN-16B
7099	W-NU-19B
7101J1V3B	B123J71V3B2
J1ZQ	B123J1ZQ2
J2V3B	B123J72ZQ2
J2ZQ	B123J2ZQ2
J3ZQ	B123J3ZQ2
7101J5ZQ	B123J5ZQ2
J11ZQ	B123J11ZQ22M
J21ZQ	B123J21ZQ22M
J50ZQ	B123J50ZQ2
J53ZQ	B123J53ZQ2
7101J60ZQ	B123J60ZQ2
J63ZQ	B126J63ZQ2
K1ZQ	A123K12KZQ
L1YZQ	A123L11YZQ
L3YZQ	A123L34YZQ
7101LYZQ	A123L01YZQ
MD9AB	A123M1D9AB
MD9AVB	A123M1D9AVB
MD9AV2B	A123M1D9AV2B
MD9V30B	A123M1D9V30B
7101MD9V60B	A123M1D9V60B
MDRQ	A123M1DRQ
MDR2Q	A123M1DR2Q
P1YZQ	A123P11YZQ
P3YZQ	A123P31YZQ
7101P4YZQ	A123P41YZQ
SCWZQ	A123S1CWZQ
SHZQ	A123S1HZQ
SPYZQ	A123S1H3ZQP
SYCQ	A123S1YCQ
7101SYWBE	A123S1YWB
SYZB	A123S1YZB
SYZQ	A123S1YZQ
7101SYZ3QE	A123S1YZ3Q
T1CWYZQ	A123T11TWZQ
T1ZQ	A123T11TZQ
7103J1V3B	B121J71V3B2
J1ZQ	B121J1ZQ2
J2V3B	B121J72V3B2
J2ZQ	B121J1ZQ2
J3ZQ	B121J3ZQ2
7103J5ZQ	B121J5ZQ2
J11ZQ	B121J11ZQ22M
J21ZQ	B121J21ZQ22M
J50ZQ	B121J50ZQ2
J53ZQ	B121J53ZQ2
7103J60ZQ	B121J60ZQ2
J63ZQ	B121J63ZQ2
K1ZQ	A121K11KZQ
L1YZQ	A121L11YZQ
L3YZQ	A121L34YZQ
7103LYZQ	A121L01YZQ
MD9AB	A121M1D9AB
MD9AVB	A121M1D9AVB
MD9AV2B	A121M1D9AV2B
MD9V30B	A121M1D9V30B
7103MD9V60B	A121M1D9V60B
MDRQ	A121M1DRQ
MDR2Q	A121M1DR2Q
P1YZQ	A121P11YZQ
P3YZQ	A121P31YZQ
7103P4YZQ	A121P41YZQ
SCWZQ	A121S1CWZQ
SHZQ	A121S1HZQ
SPYZQ	A121S1H3ZQP
SYCQ	A121S1YCQ
7103SYWBE	A121S1YWB
SYZB	A121S1YZB
SYZQ	A121S1YZQ
SYZ3QE	A121S1YZ3Q
T1CWYZQ	A121T11TWZQ
7103T1ZQ	A121T11TZQ
7105J1ZQ	B127J1ZQ2
J1V3B	B127J71V3B2
J2ZQ	B127J2ZQ2
J2V3B	B127J72V3B2
J3ZQ	B127J3ZQ2
7105J5ZQ	B127J5ZQ2
J11ZQ	B127J11ZQ22M
J21ZQ	B127J21ZQ22M
J50ZQ	B127J50ZQ2
J53ZQ	B127J53ZQ2
7105J60ZQ	B127J60ZQ2
J63ZQ	B127J63ZQ2
L1YZQ	A127L11YZQ
L3YZQ	A127L34YZQ
LYZQ	A127L01YZQ
7105MD9AB	A127M1D9AB
MD9AVB	A127M1D9AVB
MD9AV2B	A127M1D9AV2B
MD9V30B	A127M1D9V30B
MD9V60B	A127M1D9V60B
7105MDRQ	A127M1DRQ
MDR2Q	A127M1DR2Q
P1YZQ	A127P11YZQ
P3YZQ	A127P31YZQ
7105P4YZQ	A127P41YZQ
SCWZQ	A127S1CWZQ
SHZQ	A127S1HZQ
SPYZQ	A127S1H3ZQP
SYCQ	A127S1YCQ
7105SYWBE	A127S1YWB
SYZB	A127S1YZB
SYZQ	A127S1YZQ
SYZ3QE	A127S1YZ3Q
7107J1V3B	B131J71V3B2
J1ZQ	B131J1ZQ2
J2V3B	B131J72V3B2
J2ZQ	B131J2ZQ2
J3ZQ	B131J3ZQ2
7107J5ZQ	B131J5ZQ2
J11ZQ	B131J11ZQ22M
J21ZQ	B131J21ZQ22M
J50ZQ	B131J50ZQ2
J53ZQ	B131J53ZQ2
7107J60ZQ	B131J60ZQ2
J63ZQ	B131J63ZQ2
L1YZQ	A131L11YZQ
L3YZQ	A131L34YZQ
LYZQ	A131L01YZQ
7107MD9AB	A131M1D9AB
MD9AVB	A131M1D9AVB ❶
MD9AV2B	A131M1D9AV2B ❶
MD9V30B	A131M1D9V30B
MD9V60B	A131M1D9V60B
7107MDRQ	A131M1DRQ
MDR2Q	A131M1DR2Q
P1YZQ	A131P11YZQ
P3YZQ	A131P31YZQ
P4YZQ	A131P41YZQ
7107SCWZQ	A131S1CWZQ
SHZQ	A131S1HZQ
SPYZQ	A131S1H3ZQP
SYCQ	A131S1YCQ
SYWBE	A131S1YWB
7107SYZB	A131S1YZB
SYZQ	A131S1YZQ
SYZ3QE	A131S1YZ3Q
7108J1V3B	B126J71V3B2
J1ZQ	B126J1ZQ2
J2V3B	B126J72V3B2
J2ZQ	B126J2ZQ2
J3ZQ	B126J3ZQ2
7108J5ZQ	B126J5ZQ2
J11ZQ	B126J11ZQ22M
J21ZQ	B126J21ZQ22M
J50ZQ	B126J50ZQ2
J53ZQ	B126J53ZQ2
7108J60ZQ	B126J60ZQ2
J63ZQ	B126J63ZQ2
L1YZQ	A126L11YZQ
L3YZQ	A126L34YZQ
LYZQ	A126L01YZQ
7108MD9AB	A126M1D9AB
MD9AVB	A126M1D9AVB ❶
MD9AV2B	A126M1D9AV2B ❶
MD9V30B	A126M1D9V30B
MD9V60B	A126M1D9V60B
7108MDRQ	A126M1DRQ
7108MDR2Q	A126M1DR2Q
P1YZQ	A126P11YZQ
P3YZQ	A126P31YZQ
P4YZQ	A126P41YZQ
SCWZQ	A126S1CWZQ
7108SHZQ	A126S1HZQ
SPYZQ	A126S1H3ZQP
SYCQ	A126S1YCQ
SYWBE	A126S1YWB
SYZB	A126S1YZB
7108SYZQ	A126S1YZQ
SYZ3QE	A126S1YZ3Q
7109L1YZQ	A134L11YZQ
L3YZQ	A134L34YZQ
LYZQ	A134L01YZQ
MD9AB	A134M1D9AB
MD9AVB	A134M1D9AVB
7109MD9AV2B	A134M1D9AV2B
MD9V30B	A134M1D9V30B
MD9V60B	A134M1D9V60B
MDRQ	A134M1DRQ
MDR2Q	A134M1DR2Q
7109P1YZQ	A134P11YZQ
P3YZQ	A134P31YZQ
P4YZQ	A134P41YZQ
SCWZQ	A134S1CWZQ
SHZQ	A134S1HZQ
7109SPYZQ	A134S1H3ZQP
SYCQ	A134S1YCQ
SYWBE	A134S1YWB
SYZB	A134S1YZB
SYZQ	A134S1YZQ
7109SYZ3QE	A134S1YZ3Q
7201J1V3B	B223J71V3B2
J1ZQ	B223J1ZQ2
J2V3B	B223J72V3B2
J2ZQ	B223J2ZQ2
J3ZQ	B223J3ZQ2
7201J5ZQ	B223J5ZQ2
J11ZQ	B223J11ZQ22M
J21ZQ	B223J21ZQ22M
J50ZQ	B223J50ZQ2
J53ZQ	B223J53ZQ2
7201J60ZQ	B223J60ZQ2
J63ZQ	B223J63ZQ2
K1ZQ	A223K11KZQ
L1YZQ	A223L11YZQ
L3YZQ	A223L34YZQ
7201LYZQ	A223L01YZQ
MD9AB	A223M1D9AB
MD9AVB	A223M1D9AVB
MD9AV2B	A223M1D9AV2B
MD9V30B	A223M1D9V30B
7201MD9V60B	A223M1D9V60B
P1YZQ	A223P11YZQ
P3YZQ	A223P31YZQ
P4YZQ	A223P41YZQ
SCWZQ	A223S1CWZQ
7201SHZQ	A223S1HZQ
SPYZQ	A223S1H2ZQP
SYCQ	A223S1YCQ
SYWBE	A223S1YWB

NOTE: Electroswitch J11 & J21 Series require different panel cut out than C&K.
Electroswitch SC11 and SC12 Series require the use of style B bezel in order to fit in same panel cut out as C&K.
For other combinations of C&K part numbers see Toggle and Rocker Switch Cross References on pages 64 and 65.
❶ Momentary position opposite that of C&K. See Note ❼ on page 64.

STANDARD MINIATURE SWITCHES

C&K Part No.	Electroswitch Part No.
7201SYZB	A223S1YZB
SYZQ	A223S1YZQ
SYZ3QE	A223S1YZ3Q
T1CWYZQ	A223T11TWZQ
T1ZQ	A223T11TZQ
7203J1V3B	B221J71V3B2
J2V3B	B221J72V3B2
J1ZQ	B221J1ZQ2
J2ZQ	B221J2ZQ2
J3ZQ	B221J3ZQ2
7203J5ZQ	B221J5ZQ2
J11ZQ	B221J11ZQ22M
J21ZQ	B221J21ZQ22M
J50ZQ	B221J50ZQ2
J53ZQ	B221J53ZQ2
7203J60ZQ	B221J60ZQ2
J63ZQ	B221J63ZQ2
K1ZQ	A221K11KZQ
L1YZQ	A221L11YZQ
L3YZQ	A221L34YZQ
7203LYZQ	A221L01YZQ
MD9AB	A221M1D9AB
MD9AVB	A221M1D9AVB
MD9AV2B	A221M1D9AV2B
MD9V30B	A221M1D9V30B
7203MD9V60B	A221M1D9V60B
P1YZQ	A221P11YZQ
P3YZQ	A221P31YZQ
P4YZQ	A221P41YZQ
SCWZQ	A221S1CWZQ
7203SHZQ	A221S1HZQ
SPYZQ	A221S1H3ZQP
SYCQ	A221S1YCQ
SYWBE	A221S1YWB
SYZB	A221S1YZB
7203SYZQ	A221S1YZQ
SYZ3QE	A221S1YZ3Q
T1CWYZQ	A221T11TWZQ
T1ZQ	A221T11TZQ
7205J1V3B	B227J71ZQ2
J2V3B	B227J72ZQ2
J1ZQ	B227J1ZQ2
J2ZQ	B227J2ZQ2
J3ZQ	B227J3ZQ2
7205J5ZQ	B227J5ZQ2
J11ZQ	B227J11ZQ22M
J21ZQ	B227J21ZQ22M
J50ZQ	B227J50ZQ2
J53ZQ	B227J53ZQ2
7205J60ZQ	B227J60ZQ2
J63ZQ	B227J63ZQ2
L1YZQ	A227L11YZQ
L3YZQ	A227L34YZQ
LYZQ	A227L01YZQ
7205MD9AB	A227M1D9AB
MD9AVB	A227M1D9AVB
MD9AV2B	A227M1D9AV2B
MD9V30B	A227M1D9V30B
MD9V60B	A227M1D9V60B
7206P1YZQ	A227P11YZQ
P3YZQ	A227P31YZQ
P4YZQ	A227P41YZQ
SCWZQ	A227S1CWZQ

C&K Part No.	Electroswitch Part No.
7205SHZQ	A227S1HZQ
SPYZQ	A227S1H3ZQP
SYCQ	A227S1YCQ
SYWBE	A227S1YWB
SYZB	A227S1YZB
7205SYZQ	A227S1YZQ
SYZ3QE	A227S1YZ3Q
7207J1V3B	B231J71V3B2
J1ZQ	B231J1ZQ2
J2V3B	B231J72V3B2
J2ZQ	B231J2ZQ2
J3ZQ	B231J3ZQ2
7207J5ZQ	B231J5ZQ2
J11ZQ	B231J11ZQ22M
J21ZQ	B231J21ZQ22M
J50ZQ	B231J50ZQ2
J53ZQ	B231J53ZQ2
7207J60ZQ	B231J60ZQ2
J63ZQ	B231J63ZQ2
L1YZQ	A231L11YZQ
L3YZQ	A231L34YZQ
LYZQ	A231L01YZQ
7207MD9AB	A231M1D9AB
MD9AVB	A231M1D9AVB ❶
MD9AV2B	A231M1D9AV2B ❶
MD9V30B	A231M1D9V30B
MD9V60B	A231M1D9V60B
7207P1YZQ	A231P11YZQ
P3YZQ	A231P31YZQ
P4YZQ	A231P41YZQ
SCWZQ	A231S1CWZQ
SHZQ	A231S1HZQ
7207SPYZQ	A231S1H3ZQ
SYCQ	A231S1YCQ
SYWBE	A231S1WB
SYZB	A231S1YZB
SYZQ	A231S1YZQ
7207SYZ3QE	A231S1YZ3Q
7208J1V3B	B226J71V3B2
J1ZQ	B226J1V3B2
J2V3B	B226J72V3B2
J2ZQ	B226J1V3B2
J3ZQ	B226J3ZQ2
7208J5ZQ	B226J5ZQ2
J11ZQ	B226J11ZQ22M
J21ZQ	B226J21ZQ22M
J50ZQ	B226J50ZQ2
J53ZQ	B226J53ZQ2
7208J60ZQ	B226J60ZQ2
J63ZQ	B226J63ZQ2
L1YZQ	A226L11YZB
L3YZQ	A226L34YZQ
LYZQ	A226L01YZQ
7208MD9AB	A226M1D9AB
MD9AVB	A226M1D9AVB ❶
MD9AV2B	A226M1D9AV2B ❶
MD9V30B	A226M1D9V30B
MD9V60B	A226M1D9V60B
7208P1YZQ	A226P11YZQ
P3YZQ	A226P31YZQ
P3YZQ	A226P41YZQ
SCWZQ	A226S1CWZQ

C&K Part No.	Electroswitch Part No..
7208SHZQ	A226S1HZQ
SPYZQ	A226S1H3ZQP
SYWBE	A226S1YWB
SYZB	A226S1YZB
SYZQ	A226S1YZQ
7208SYZ3QE	A226S1YZ3Q
7209L1YZQ	A234L11YZQ
L3YZQ	A234L34YZQ
LYZQ	A234L01YZQ
MD9AB	A234M1D9AB
MD9AVB	A234M1D9AVB
7209MD9AV2B	A234M1D9AV2B
MD9V30B	A234M1D9V30B
MD9V60B	A234M1D9V60B
P1YZQ	A234P11YZQ
P3YZQ	A234P31YZQ
7209P4YZQ	A234P31YZQ
SCWZQ	A234S1CWZQ
SHZQ	A234S1HZQ
SPYZQ	A234S1H3ZQP
SYCQ	A234S1YCQ
7209SYWBE	A234S1YWB
SYZB	A234S1YZB
SYZQ	A234S1YZQ
SYZ3QE	A234S1YZ3Q
7211J1V3B	B232J71V3B2
J1ZQ	B232J1ZQ2
J2V3B	B232J72V3B2
J2ZQ	B232J2ZQ2
J3ZQ	B232J3ZQ2
7211J5ZQ	B232J5ZQ2
J11ZQ	B232J11ZQ22M
J21ZQ	B232J21ZQ22M
J50ZQ	B232J50ZQ2
J53ZQ	B232J53ZQ2
7211J60ZQ	B232J60ZQ2
J63ZQ	B232J63ZQ2
K1ZQ	A232K11KZQ
L1YZQ	A232L11YZQ
L3YZQ	A232L34YZQ
7211LYZQ	A232L01YZQ
MD9AB	A232M1D9AB
MD9AVB	A232M1D9AVB
MD9AV2B	A232M1D9AV2B
MD9V30B	A232M1D9B30B
7211MD9V60B	A232M1D9V60B
P1YZQ	A232P11YZQ
P3YZQ	A232P31YZQ
P4YZQ	A232P41YZQ
SCWZQ	A232S1CWZQ
7211SHZQ	A232S1HZQ
SPYZQ	A232S1H3ZQP
SYCQ	A232S1YCQ
SYWBE	A232S1YWB
SYZB	A232S1YZB
7211SYZQ	A232S1YZQ
SYZ3QE	A232S1YZ3Q
7213J1V3B	B233J71V3B2
J1ZQ	B233J1ZQ2
J2V3B	B233J72V3B2
J2ZQ	B233J2ZQ2
J3ZQ	B233J3ZQ2
7213J5ZQ	B233J5ZQ2

C&K Part No.	Electroswitch Part No.
7213J11ZQ	B233J11ZQ22M
J21ZQ	B233J21ZQ22M
J50ZQ	B233J50ZQ2
J53ZQ	B233J53ZQ2
J60ZQ	B233J60ZQ2
7213J63ZQ	B233J63ZQ2
L1YZQ	A233L11YZQ
L3YZQ	A233L34YZQ
LYZQ	A233L01YZQ
MD9AB	A233M1D9AB
7213MD9AVB	A233M1D9AVB ❶
MD9AV2B	A233M1D9AV2B ❶
MD9V30B	A233M1D9V30B
MD9V60B	A233M1D9V60B
P1YZQ	A233P11YZQ
7213P3YZQ	A233P31YZQ
P4YZQ	A233P41YZQ
SCWZQ	A233S1CWZQ
SHZQ	A233S1HZQ
SPYZQ	A233S1H3ZQP
7213SYCQ	A233S1YCQ
SYWBE	A233S1YWB
SYZB	A233S1YZB
SYZQ	A233S1YZQ
SYZ3QE	A233S1YZ3Q
7215J1V3B	B235J7AV3B2
J1ZQ	B235J1ZQ2
J2V3B	B235J72ZQ2
J2ZQ	B235J2ZQ2
J3ZQ	B235J3ZQ2
7215J5ZQ	B235J5ZQ2
J11ZQ	B235J11ZQ22M
J21ZQ	B235J21ZQ22M
J50ZQ	B235J50ZQ2
J53ZQ	B235J53ZQ2
7215J60ZQ	B235J60ZQ2
J63ZQ	B235J63ZQ2
L1YZQ	A235L11YZQ
L3YZQ	A235L34YZQ
LYZQ	A235L01YZQ
7215MD9AB	A235M1D9AB
MD9AVB	A235M1D9AVB
MD9AV2B	A235M1D9AV2B
MD9V30B	A235M1D9V30B
MD9V60B	A235M1D9V60B
7215P1YZQ	A235P11YZQ
P3YZQ	A235P31YZQ
P4YZQ	A235P41YZQ
SCWZQ	A235S1CWZQ
SHZQ	A235S1HZQ
7215SPYZQ	A235S1H3ZQ
SYCQ	A235S1YCQ
SYWBE	A235S1YWB
SYZB	A235S1YZB
SYZQ	A235S1YZQ
7215SYZ3QE	A235S1YZ3Q
7301J1ZQ	B323J1ZQ2
J2ZQ	B323J2ZQ2
J3ZQ	B323J3ZQ2
J5ZQ	B323J5ZQ2
J11ZQ	B323J11ZQ22M
7301J21ZQ	B323J21ZQ22M
K1ZQ	A323K11KZQ

NOTE: Electroswitch J11 & J21 Series require different panel cut out than C&K.
Electroswitch SC11 and SC12 Series require the use of style B bezel in order to fit in same panel cut out as C&K.
For other combinations of C&K part numbers see Toggle and Rocker Switch Cross References on pages 64 and 65.

❶ Momentary position opposite that of C&K. See Note ❼ on page 64.

C&K to Electroswitch Cross Reference

STANDARD MINIATURE SWITCHES

C&K Part No.	Electroswitch Part No.
7301L1YZQ	A323L11YZQ
L3YZQ	A323L34YZQ
LYZQ	A323L01YZQ
MD9AVB	A323M1D9AVB
MD9AV2B	A323M1D9AV2B
7301P1YZQ	A323P11YZQ
P3YZQ	A323P31YZQ
P4YZQ	A323P41YZQ
SCWZQ	A323S1CWZQ
SHZQ	A323S1HZQ
7301SPYZQ	A323S1H3ZQP
SYCQ	A323S1YCQ
SYWBE	A323S1YWB
SYZB	A323S1YZB
SYZQ	A323S1YZQ
7301SYZ3QE	A323S1YZ3Q
T1CWYZQ	A323T11TWZQ
7303J1ZQ	B321J1ZQ2
J2ZQ	B321J2ZQ2
J3ZQ	B321J3ZQ2
J5ZQ	B321J5ZQ2
J11ZQ	B321J11ZQ22M
7303J21ZQ	B321J21ZQ22M
K1ZQ	A321K11KZQ
L1YZQ	A321L11YZQ
L3YZQ	A321L34YZQ
LYZQ	A321L01YZQ
7303MD9AVB	A321M1D9AVB
MD9AV2B	A321M1D9AV2B
P1YZQ	A321P11YZQ
P3YZQ	A321P31YZQ
P4YZQ	A321P41YZQ
7303SCWZQ	A321S1CWZQ
SHZQ	A321S1HZQ
SPYZQ	A321S1H3ZQP
SYCQ	A321S1YCQ
SYWBE	A321S1YWB
7303SYZB	A321S1YZB
SYZQ	A321S1YZQ
SYZ3QE	A321S1YZ3Q
7305J1ZQ	B327J1ZQ2
J2ZQ	B327J2ZQ2
J3ZQ	B327J2ZQ2
J5ZQ	B327J5ZQ2
J11ZQ	B327J11ZQ22M
7305J21ZQ	B327J21ZQ22M
L1YZQ	A321L11YZQ
L3YZQ	A321L34YZQ
LYZQ	A321L01YZQ
MD9AVB	A321M1D9AVB
7305MD9AV2B	A321M1D9AV2B
P1YZQ	A321P11YZQ
P3YZQ	A321P31YZQ
P4YZQ	A321P41YZQ
SCWZQ	A321S1CWZQ
7305SHZQ	A321S1HZQ
SPYZQ	A321S1H3ZQ
SYCQ	A321S1YCQ
SYWBE	A321S1YWB
SYZB	A321S1YZB
7305SYZQ	A321S1YZQ
SYZ3QE	A321S1YZ3Q

C&K Part No.	Electroswitch Part No.
7307J1ZQ	B331J1ZQ2
J2ZQ	B331J2ZQ2
J3ZQ	B331J3ZQ2
J5ZQ	B331J5ZQ2
J11ZQ	B331J11ZQ22M
7307J21ZQ	B331J21ZQ22M
L1YZQ	A331L11YZQ
L3YZQ	A331L34YZQ
LYZQ	A331L01YZQ
MD9AVB	A331M1D9AVB ❶
7307MD9AV2B	A331M1D9AV2B ❶
P1YZQ	A331P11YZQ
P37ZQ	A331P31YZQ
P3YZQ	A331P41YZQ
SCWZQ	A331S1CWZQ
7307SHZQ	A331S1HZQ
SPYZQ	A331S1H2ZQP
SYCQ	A331S1YCQ
SYWBE	A331S1YWB
SYZB	A331S1YZB
7307SYZQ	A331S1YZQ
SYZ3QE	A331S1YZ3Q
7309L1YZQ	A334L11YZQ
L3YZQ	A334L34YZQ
LYZQ	A334L01YZQ
MD9AVB	A334M1D9AVB
MD9AV2B	A334M1D9AV2B
7309P1YZQ	A334P11YZQ
P3YZQ	A334P31YZQ
P4YZQ	A334P41YZQ
SCWZQ	A334S1CWZQ
SHZQ	A334S1HZQ
7309SPYZQ	A334S1H3ZQP
SYCQ	A334S1YCQ
SYWBE	A334S1YWB
SYZB	A334S1YZB
SYZQ	A334S1YZQ
7309SYZ3QE	A334S1YZ3Q
7401J1ZQ	B423J1ZQ2
J2ZQ	B423J2ZQ2
J3ZQ	B423J3ZQ2
J5ZQ	B423J5ZQ2
J11ZQ	B423J11ZQ22M
7401J21ZQ	B423J21ZQ22M
K1ZQ	A423K11KZQ
L1YZQ	A423L11YZQ
L3YZQ	A423L34YZQ
LYZQ	A423L01YZQ
7401MD9AVB	A423M1D9AVB
MD9AV2B	A423M1D9AV2B
P1YZQ	A423P11YZQ
P3YZQ	A423P31YZQ
P4YZQ	A423P41YZQ
7401SCWZQ	A423S1CWZQ
SHZQ	A423S1HZQ
SPYZQ	A423S1H3ZQP
SYCQ	A423S1YCQ
SYWBE	A423S1YWB
7401SYZB	A423S1YZB
SYZQ	A423S1YZQ
SYZ3QE	A423S1YZ3Q
T1CWYZQ	A423T11TWZQ
7403J1ZQ	B421J1ZQ2

C&K Part No.	Electroswitch Part No..
7403J2ZQ	B421J2ZQ2
J3ZQ	B421J3ZQ2
J5ZQ	B421J5ZQ2
J11ZQ	B421J11ZQ22M
J21ZQ	B421J21ZQ22M
7403K1ZQ	A421K11KZQ
L1YZQ	A421L11YZQ
L3YZQ	A421L34YZQ
LYZQ	A421L01YZQ
MD9AVB	A421M1D9AVB
7403MD9AV2B	A421M1D9AV2B
P1YZQ	A421P11YZQ
P3YZQ	A421P31YZQ
P4YZQ	A421P41YZQ
SCWZQ	A421S1CWZQ
7403SHZQ	A421S1HZQ
SPYZQ	A421S1H3ZQP
SYCQ	A421S1YCQ
SYWBE	A421S1YWB
SYZB	A421S1YZB
7403SYZQ	A421S1YZQ
SYZ3QE	A421S1YZ3Q
7405J1ZQ	B427J1ZQ2
J2ZQ	B427J2ZQ2
J3ZQ	B427J3ZQ2
J5ZQ	B427J5ZQ2
J11ZQ	B427J11ZQ22M
7405J21ZQ	B427J21ZQ22M
L1YZQ	A427L11YZQ
L3YZQ	A427L34YZQ
LYZQ	A427L01YZQ
MD9AVB	A427M1D9AVB
7405MD9AV2B	A427M1D9AV2B
P1YZQ	A427P11YZQ
P3YZQ	A427P31YZQ
P4YZQ	A427P41YZQ
SCWZQ	A427S1CWZQ
7405SHZQ	A427S1HZQ
SPYZQ	A427S1H3ZQP
SYCQ	A427S1YCQ
SYWBE	A427S1YWB
SYZB	A427S1YZB
7405SYZQ	A427S1YZQ
SYZ3QE	A427S1YZ3Q
7407J1ZQ	B431J1ZQ2
J2ZQ	B431J2ZQ2
J3ZQ	B431J3ZQ2
J5ZQ	B431J5ZQ2
J11ZQ	B431J11ZQ22M
7407J21ZQ	B431J21ZQ22M
L1YZQ	A431L11YZQ
L3YZQ	A431L34YZQ
LYZQ	A431L01YZQ
MD9AVB	A431M1D9AVB ❶
7407MD9AV2B	A431M1D9AV2B ❶
P1YZQ	A431P11YZQ
P3YZQ	A431P31YZQ
P4YZQ	A431P41YZQ
SCWZQ	A431S1CWZQ
7407SHZQ	A431S1HZQ
SPYZQ	A431S1H3ZQP
SYCQ	A431S1YCQ
SYWBE	A431S1YWB

C&K Part No.	Electroswitch Part No.
7407SYZB	A431S1YZB
SYZQ	A431S1YZQ
SYZ3QE	A431S1YZ3Q
7409L1YZQ	A434L11YZQ
L3YZQ	A434L34YZQ
LYZQ	A434L01YZQ
MD9AVB	A434M1D9AVB
MC9AV2B	A434M1D9AV2B
7409P1YZQ	A434P11YZQ
P3YZQ	A434P31YZQ
P4YZQ	A434P41YZQ
SCWZQ	A434S1CWZQ
SHZQ	A434S1HZQ
7409SPYZQ	A434S1H3ZQP
SYCQ	A434S1YCQ
SYWBE	A434S1YWB
SYZB	A434S1YZB
SYZQ	A434S1YZQ
7409SYZ3QE	A434S1YZ3Q
7411J1ZQ	B432J1ZQ2
J2ZQ	B432J2ZQ2
J3ZQ	B432J3ZQ2
J5ZQ	B432J5ZQ2
J11ZQ	B432J11ZQ22M
7411J21ZQ	B432J21ZQ22M
L1YZQ	A432L11YZQ
L3YZQ	A432L34YZQ
LYZQ	A432L01YZQ
MD9AVB	A432M1D9AVB
7411MD9AV2B	A432M1D9AV2B
P1YZQ	A432P11YZQ
P3YZQ	A432P31YZQ
P4YZQ	A432P41YZQ
SCWZQ	A432S1CWZQ
7411SHZQ	A432S1HZQ
SPYZQ	A432S1H3ZQP
SYCQ	A432S1YCQ
SYWBE	A432S1YWB
SYZB	A432S1YZB
7411SYZQ	A432S1YZQ
SYZ3QE	A432S1YZ3Q
7413J1ZQ	B433J1ZQ2
J2ZQ	B433J2ZQ2
J3ZQ	B433J3ZQ2
J5ZQ	B433J5ZQ2
J11ZQ	B433J11ZQ22M
7413J21ZQ	B433J21ZQ22M
L1YZQ	A433L11YZQ
L3YZQ	A433L34YZQ
LYZQ	A433L01YZQ
MD9AVB	A433M1D9AVB ❶
7413MD9AV2B	A433M1D9AV2B ❶
P1YZQ	A433P11YZQ
P3YZQ	A433P31YZQ
P4YZQ	A433P41YZQ
SCWZQ	A433S1CWZQ
7413SHZQ	A433S1HZQ
SPYZQ	A433S1H3ZQP
SYCQ	A433S1YCQ
SYWBE	A433S1YWB
SYZB	A433S1YZB
7413SYZQ	A433S1YZQ

NOTE: Electroswitch J11 & J21 Series require different panel cut out than C&K.
Electroswitch SC11 and SC12 Series require the use of style B bezel in order to fit in same panel cut out as C&K.
For other combinations of C&K part numbers see Toggle and Rocker Switch Cross References on pages 64 and 65.
❶ Momentary position opposite that of C&K. See Note ❼ on page 64.

C&K to Electroswitch Cross Reference

STANDARD MINIATURE SWITCHES

C&K Part No.	Electroswitch Part No.
7413SYZ3QE	A433S1YZ3Q
7415J1ZQ	B435J1ZQ2
J2ZQ	B435J2ZQ2
J3ZQ	B435J3ZQ2
J5ZQ	B435J5ZQ2
J11ZQ	B435J11ZQ22M
7415J21ZQ	B435J21ZQ22M
L1YZQ	A435L11YZQ
L3YZQ	A435L34YZQ
LYZQ	A435L01YZQ
MD9AVB	A435M1D9AVB
7415MD9AV2B	A435M1D9AV2B
P1YZQ	A435P11YZQ
P3YZQ	A435P31YZQ
P4YZQ	A435P41YZQ
SCWZQ	A435S1CWZQ
7415SHZQ	A435S1HZQ
SPYZQ	A435S1H3ZQP
SYCQ	A435S1YCQ
SYWBE	A435S1YWB
SYZB	A435S1YZB
7415SYZQ	A435S1YZQ
SYZ3QE	A435S1YZ3Q
7527 White	W-KN-17A
7527 Black	W-KN-17
7527 Red	W-KN-17B
7572	W-RI-16
7752	15-1047
7785	W-TL-124
7890 White	W-BZ-12A
7890 Black	W-BZ-12
7890 Red	W-BZ-12B
7969	W-NU-12

C&K Part No.	Electroswitch Part No.
7982 White	W-KN-18A
7982 Black	W-KN-18
7982 Red	W-KN-18B
8025	SW2AA10
8121AGE	PS9-100G
AV2GE	PS11-100G
D8R2Q	PS5-100Q
D8RQ	PS6-100Q
8121HCQE	PS2-100Q
HZQE	PS1-100Q
J81CBE	PS16-1122B
J81CQE	PS16-1122Q
J81ZBE	PS14-1122B
8121J81ZQE	PS14-1122Q
J82CBE	PS16-1124B
J82CQE	PS16-1124Q
J82ZBE	PS14-1124B
J82ZQE	PS14-1124Q
8121J83CBE	PS17-1122B
J83CQE	PS17-1122Q
J83ZBE	PS15-1122B
J83ZQE	PS15-1122Q
J84CBE	PS17-1124B
8121J84CQE	PS17-1124Q
J84ZBE	PS15-1124B
J84ZQE	PS15-1124Q
V4GE	PS81-100G
V6GE	PS82-100G
8131V7GE	PS83-100G
V40GE	PS71-100G
V60GE	PS72-100G
V70GE	PS73-100G

C&K Part No.	Electroswitch Part No..
8125ABE	PS9-100B
AV2BE	PS11-100B
HCBE	PS2-100B
HZBE	PS1-100B
V3CBE	PS8-100B
8125V4BE	PS81-100B
V6BE	PS82-100B
V7BE	PS83-100B
V30CBE	PS7-100B
V40BE	PS71-100B
8125V60BE	PS72-100B
V70BE	PS73-100B
8161SHZQ	PB-123
8168SHZQ	PB-126
8221AGE	PS9-200G
AV2GE	PS11-200G
HCQE	PS2-200Q
HZQE	PS1-200Q
J81CBE	PS16-2122B
8221J81CQE	PS16-2122Q
J81ZBE	PS14-2122B
J81ZQE	PS14-2122Q
J82CBE	PS16-2124B
J82CQE	PS16-2124Q
8221J82ZBE	PS14-2124B
J82ZQE	PS14-2124Q
J83CBE	PS17-2122B
J83CQE	PS17-2122Q
J83ZBE	PS15-2122B
8221J83ZQE	PS15-2122Q
J84CBE	PS17-2124B
J83CQE	PS17-2124Q
J84ZBE	PS15-2124B
J84ZQE	PS15-2124Q

C&K Part No.	Electroswitch Part No.
8221V4GE	PS81-200G
V6GE	PS82-200G
V7GE	PS83-200G
V40GE	PS71-200G
V60GE	PS72-200G
8221V70GE	PS73-200G
8225ABE	PS9-200B
AV2BE	PS11-200B
HCBE	PS2-200B
HZBE	PS1-200B
V3CBE	PS8-200B
8225V4BE	PS81-200B
V6BE	PS82-200B
V7BE	PS83-200B
V30CBE	PS7-200B
V40BE	PS71-200B
8225V60BE	PS72-200B
V70BE	PS73-200B
8632ZQ	SA1BV20
8633ZQ	SA1BW20

NOTE: Electroswitch J11 & J21 Series require different panel cut out than C&K.
Electroswitch SC11 and SC12 Series require the use of style B bezel in order to fit in same panel cut out as C&K.
For other combinations of C&K part numbers see Toggle and Rocker Switch Cross References on pages 64 and 65.

C&K to Electroswitch Cross Reference

WASHABLE MINIATURE SWITCHES

C&K Part No.	Electroswitch Part No.
E101J1AB	WR123J71AB2
J1AV2B	WR123J71AV2B2
J1V3B	WR123J71V3B2
J1ZQ	WR123J1ZQ2
J2AB	WP123J72AB2
E101J2AV2B	WP123J7SAV2B2
J2V3B	WP123J72V3B2
J2ZQ	WP123J2ZQ2
L3D1ZQ	WT123L134D1ZQ
L3YZQ	WT123L34YZQ
E101MD1AB	WT123M1D1AB
MD1AV2B	WT123M1D1AV2B
MD1V30B	WT123M1D1V30B
MD1ZQ	WT123M1D1ZQ
MYZQ	WT123M1YZQ
E101SD1AB	WT123S1D1AB
SD1AV2B	WT123S1D1AV2B
SD1V30B	WT123S1D1V30B
SD1ZQ	WT123S1D1ZQ
ZQ	WT123S1YZQ

C&K Part No.	Electroswitch Part No.
E103J1AB	WR121J71AB2
J1AV2B	WR121J71AV2B2
J1V3B	WR121J71V3B2
J1ZQ	WR121J1ZQ2
J2AB	WP121J72AB2
E103J2AV2B	WP121J7219V2B2
J2V3B	WP121J72V3B2
J2ZQ	WP121J2ZQ
L3D1ZQ	WT121L34D1ZQ
L3YZQ	WT121L34YZQ
E103MD1AB	WT121M1D1AB
MD1AV2B	WT121M1D1AV2B
MD1V30B	WT121M1D1V30B
MD1ZQ	WT121M1D1ZQ
MYAB	WT121M1YAB
E103MYAV2B	WT121M1YAV2B
MYV30B	WT121M1YV30B
MYZQ	WT121M1YZQ
SD1AB	WT121S1D1AB
SD1AV2B	WT121S1D1AV2B

C&K Part No.	Electroswitch Part No..
E103SD1V30B	WT121S1D1V30B
E103SD1ZQ	WT121S1D1ZQ
E103SYZQ	WT121S1YZQ
E105J1AB	WR127J71AB2
J1AV2B	WR127J71AV2B2
J1V3B	WR127J71V3B2
J1ZQ	WR127J1ZQ2
J2AB	WP127J72AB2
E105J2AV2B	WP127J72AV2B2
J2V3B	WP127J72V3B2
J2ZQ	WP127J2ZQ2
L3D1ZQ	WT127L34D1ZQ
L3YZQ	WT127L34YZQ
E105MD1AB	WT127M1D1AB
MD1AV2B	WT127M1D1AV2B
MD1V30B	WT127M1D1V30B
MD1ZQ	WT127M1D1ZQ
MYZQ	WT127M1YZQ
E105SD1AB	WT127S1D1AB
SD1AV2B	WT127S1D1AV2B

C&K Part No.	Electroswitch Part No.
E105SD1V30B	WT127S1D1V30B
SD1ZQ	WT127S1D1ZQ
SYZQ	WT127S1YZQ
E107J1AB	WR131J71AB2
J1AV2B	WR131J71AV2B2 ❶
J1V3B	WR131J71V3B2
J1ZQ	WR131J1ZQ2
J2AB	WP131J72AB2
E107J2AV2B	WP131J72AV2B2 ❶
J2V3B	WP131J72V3B2
J2ZQ	WP131J2ZQ2
L3D1ZQ	WT131L34D1ZQ
L3YZQ	WT131L34YZQ
E107MD1AB	WT131M1D1AB
MD1AV2B	WT131M1D1AV2B ❶
MD1V30B	WT131M1D1V30B
MD1ZQ	WT131M1D1ZQ
MYZQ	WT131M1YZQ
E107SD1AB	WT131S1D1AB
SD1AV2B	WT131S1D1AV2B ❶

NOTE: For other combinations of C&K part numbers see Washable Toggle and Rocker Switch Cross References on page 66.
❶ Momentary position opposite that of C&K. See Notes ❺ or ❼ on page 66.

C&K to Electroswitch Cross Reference

STANDARD MINIATURE SWITCHES

C&K Part No.	Electroswitch Part No.
E107SD1V30B	WT131S1D1V30B
SD1ZQ	WT131S1D1ZQ
SYZQ	WT131S1YZQ
E108J1AB	WR126J71AB2
J1AV2B	WR126J71AV2B2 ❶
J1V3B	WR126J71V3B2
J1ZQ	WR126J71ZQ2
J2AB	WP126J72AB2
E108J2AV2B	WP126J72AV2B2 ❶
J2V3B	WP126J72V3B2
J2ZQ	WP126J2ZQ2
L3D1ZQ	WT126L34D1ZQ
L3YZQ	WT126L34YZQ
E108MD1AB	WT126M1D1AB
MD1AV2B	WT126M1D1AV2B ❶
MD1V30B	WT126M1D1V30B
MD1ZQ	WT126M1D1ZQ
MYZQ	WT126M1YZQ
E108SD1AB	WT126S1D1AB
SD1AV2B	WT126S1D1AV2B ❶
SD1V30B	WT126S1D1V30B
SD1ZQ	WT126S1D1ZQ
SYZQ	WT126S1YZQ
E201J1AB	WR223J71AB2
J1AV2B	WR223J71AV2B2
J1V3B	WR223J71V3B2
J1ZQ	WR223J1ZQ2
J2AB	WP223J72AB2
E201J2AV2B	WP223J72AV2B2
J2V3B	WP223J72V3B2
J2ZQ	WP223J2ZQ2
L3D1ZQ	WT223L34D1ZQ
L3YZQ	WT223L34YZQ
E201MD1AB	WT223M1D1AB
MD1AV2B	WT223M1D1AV2B
MD1V30B	WT223M1D1V30B
MD1ZQ	WT223M1D1ZQ
MYZQ	WT223M1YZQ
E201SD1AB	WT223S1D1AB
SD1AV2B	WT223S1D1AV2B
SD1V30B	WT223S1D1V30B
SD1ZQ	WT223S1D1ZQ
SYZQ	WT223SZ1YZQ
E203J1AB	WR221J71AB2
J1AV2B	WR221J71AV2B2
J1V3B	WR221J71V3B2
J1ZQ	WR221J1ZQ2
J2AB	WP221J72AB2
E203J2AV2B	WP221J72AV2B2
J2V3B	WP221J72V3B2
J2ZQ	WP221J2ZQ
L3D1ZQ	WT221L34D1ZQ
L3YZQ	WT221L34YZQ
E203MD1AB	WT221M1D1AB
MD1AV2B	WT221M1D1AV2B
MD1V30B	WT221M1D1V30B
MD1ZQ	WT221M1D1ZQ
MYZQ	WT221M1YZQ
E203SD1AB	WT221S1D1AB
SD1AV2B	WT221S1D1AV2B
SD1V30B	WT221S1D1V30B
SD1ZQ	WT221S1D1ZQ
SYZQ	WT221S1YZQ
E205J1AB	WR227J71AB2
J1AV2B	WR227J71AV2B2
J1V3B	WR227J71V3B2
J1ZQ	WR227J1ZQ2
J2AB	WP227J72AB2
E205J2AV2B	WP227J72AV2B2
J2V3B	WP227J72V3B2
J2ZQ	WP227J2ZQ2
L3D1ZQ	WT227L34D1ZQ
L3YZQ	WT227L34YZQ
E205MD1AB	WT227M1D1AB
MD1AV2B	WT227M1D1AV2B
MD1V30B	WT227M1D1V30B
MD1ZQ	WT227M1D1ZQ
MYZQ	WT227M1YZQ
E205SD1AB	WT227S1D1AB
SD1AV2B	WT227S1D1AV2B
SD1V30B	WT227S1D1V30B
SD1ZQ	WT227S1D1ZQ
SYZQ	WT227S1YZQ
E207J1AB	WR231J71AB2
J1AV2B	WR231J71AV2B2 ❶
J1V3B	WR231J71V3B2
J1ZQ	WR231J1ZQ2
J2AB	WP231J72AB2
E207J2AV2B	WP231J72AV2B2 ❶
J2V3B	WP231J72V3B2
J2ZQ	WP231J2ZQ2
L3D1ZQ	WT231L34D1ZQ
L3YZQ	WT231L34YZQ
E207MD1AB	WT231M1D1AB
MD1AV2B	WT231M1D1AV2B ❶
MD1V30B	WT231M1D1V30B
MD1ZQ	WT231M1D1ZQ
MYZQ	WT231M1YZQ
E207SD1AB	WT231S1D1AB
SD1AV2B	WT231S1D1AV2B ❶
SD1V30B	WT231S1D1V30B
SD1ZQ	WT231S1D1ZQ
SYZQ	WT231S1YZQ
E208J1AB	WR226J71AB2
J1AV2B	WR226J71AV2B2 ❶
J1V3B	WR226J71V3B2
J1ZQ	WR226J71ZQ2
J2AB	WP226J72AB2
E209J2AV2B	WR226J72AV2B2 ❶
J2V3B	WR226J72V3B2
J2ZQ	WP226J2ZQ2
L3D1ZQ	WT226L34D1ZQ
L36ZQ	WT226L34YZQ
E208MD1AB	WT226M1D1AB
MD1AV2B	WT226M1D1AV2B ❶
MD1V30B	WT226M1D1V30B
MD1ZQ	WT226M1D1ZQ
MYZQ	WT226M1YZQ
E208SD1AB	WT226S1D1AB
SD1AV2B	WT226S1D1AV2B ❶
SD1V30B	WT226S1D1V30B
SD1ZQ	WT226S1D1ZQ
SYZQ	WT226S1YZQ
E211J1AB	WR232J71AB2
J1AV2B	WR232J71AV2B2
J1V3B	WR232J71V3B2
J1ZQ	WR232J1ZQ2
J2AB	WP232J72AB2
E211J2AV2B	WP232J72AV2B2
J2V3B	WP232J72V3B2
J2ZQ	WP232J2ZQ2
L3D1ZQ	WT232L34D1ZQ
L3YZQ	WT232L34YYZQ
E211MD1AB	WT232M1D1AB
MD1AV2B	WT232M1D1AV2B
MD1V30B	WT232M1D1V30B
MD1ZQ	WT232M1D1ZQ
MYZQ	WT232M1YZQ
E211SD1AB	WT232S1D1AB
SD1AV2B	WT232S1D1AV2B
SD1V30B	WT232S1D1V30B
SD1ZQ	WT232S1D1ZQ
SYZQ	WT232S1YZQ
E215J1AB	WR235J71AB2
J1AV2B	WR235J71AV2B2
J1V3B	WR235J71V3B2
J1ZQ	WR235J1ZQ2
J2AB	WP235J72AB2
E215J2AV2B	WP235J72AV2B2
J2V3B	WP235J72V3B2
J2ZQ	WP235J2ZQ2
L3D1ZQ	WT235L34D1ZQ
L3YZQ	WT235L34YZQ
E215MD1AB	WT235M1D1AB
MD1AV2B	WT235M1D1AV2B
MD1V30B	WT235M1D1V30B
MD1ZQ	WT235M1D1ZQ
MYZ0	WT235M1YZQ
E215SD1AB	WT235S1D1AB
SD1AV2B	WT235S1D1AV2B
SD1V30B	WT235S1D1V30B
SD1ZQ	WT235S1D1ZQ
SYZQ	WT235S1YZQ

NOTE: For other combinations of C&K part numbers see Washable Toggle and Rocker Switch Cross References on page 66.
❶ Momentary position opposite that of C&K. See Notes ❺ or ❼ on page 66.

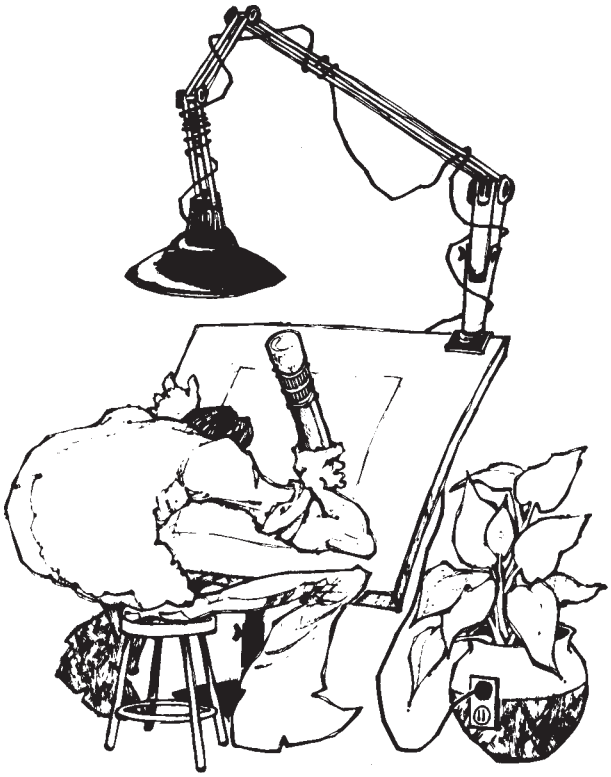

Designers' Choice…

This catalog represents a broad selection of popular switches, associated hardware and accessories available through a national network of Authorized Distributors.

But our capabilities extend well beyond the standard — into the "special" and even the "proprietary". The point is — if you haven't found what you're looking for in these standard selections — we'll build it for you.

Like one of these…

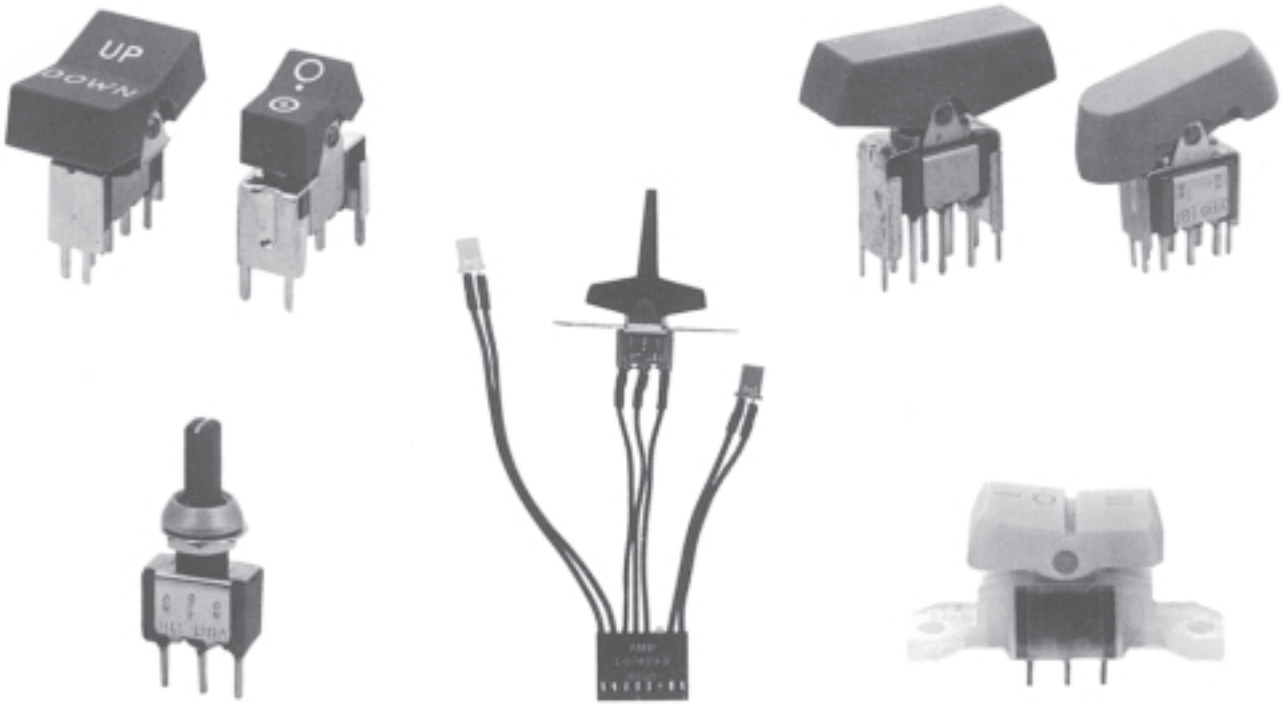

A whole lot more than prompt

availability, quality assurance, and field help. There's proven design innovation, too!

ELECTROSWITCH
•ELECTRONIC PRODUCTS
UNIT OF ELECTRO SWITCH CORP.

EXPANDED "A SERIES" TOGGLE SWITCHES

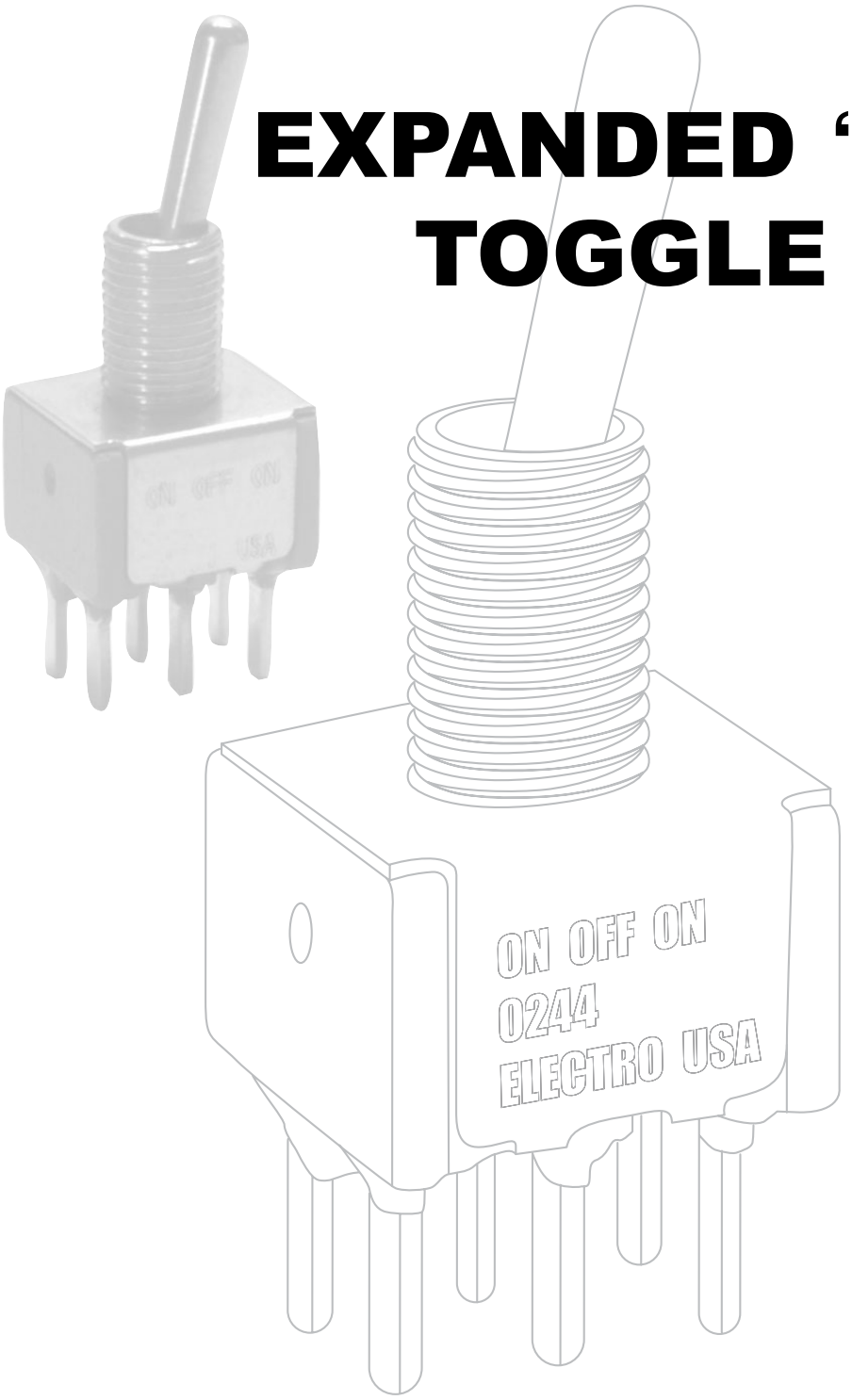

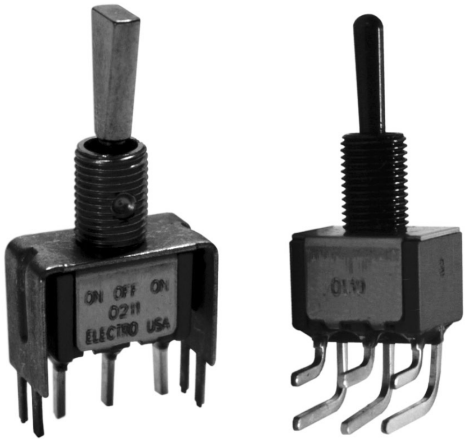

ISO 9001 Registered

Phone: 888-768-2797 or 919-833-0707
Fax: 800-909-9171 or 919-833-8016
Web site: http://www.electro-nc.com
E-mail: sales@electro-nc.com

ELECTROSWITCH
ELECTRONIC PRODUCTS
UNIT OF ELECTRO SWITCH CORP.

Electroswitch Offers New Toggle Combinations to Cross Competition.

Electroswitch is pleased to present this new expanded toggle brochure created to provide many additional crosses against competition:

C&K 7000 and E Series

Alco A and MTA Series

NKK M2T and M Series

Apem ST and 5000 Series

E-Switch 100 and 100A Series

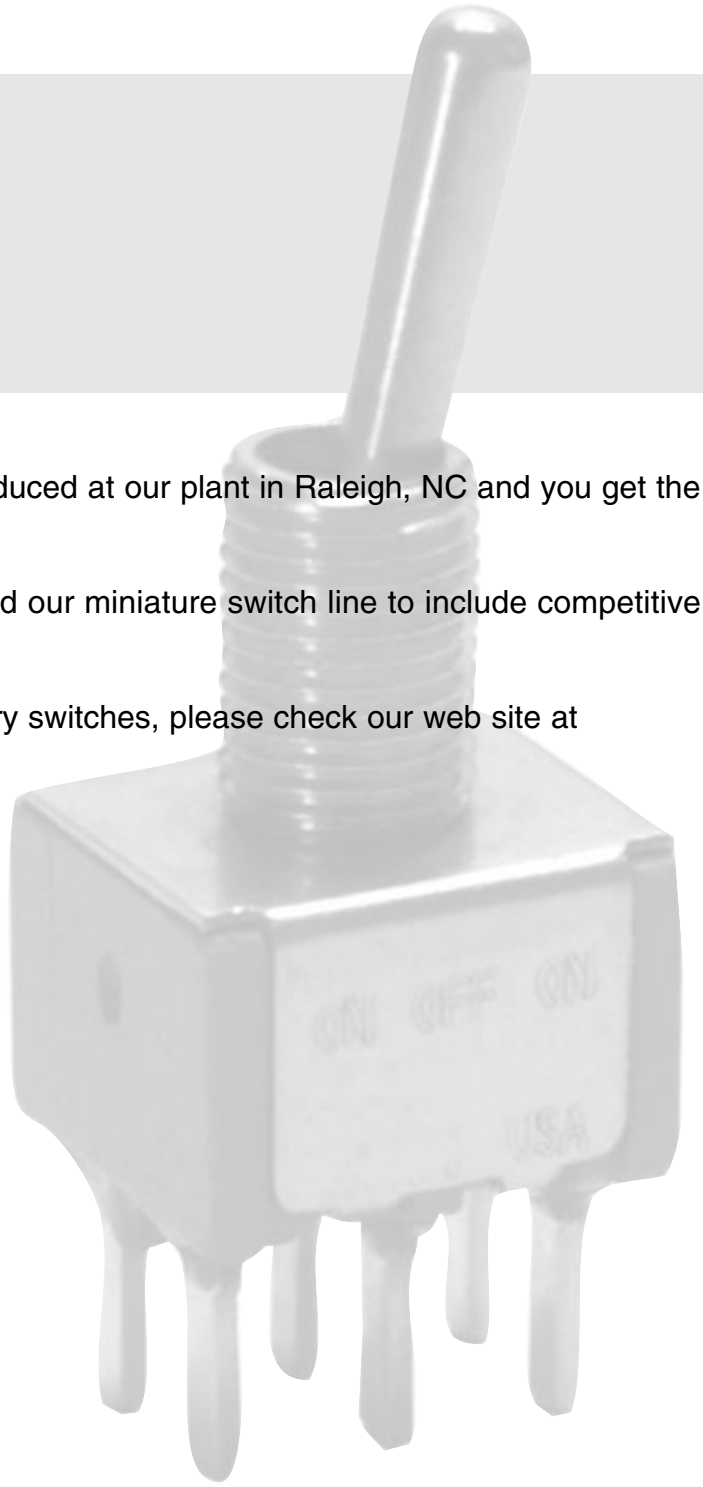

All the new toggle switch combinations are produced at our plant in Raleigh, NC and you get the value of over 55 years of Electroswitch quality.

In the coming months we plan to further expand our miniature switch line to include competitive crosses for rockers and washables.

For information on all of our miniature and rotary switches, please check our web site at **www.electro-nc.com**

MINIATURE SWITCHES

Ordering Table – Standard Toggle Switches

Following the table from left to right, the designer is able to specify the options wanted. The options are described and illustrated. To determine a part number select the options desired and fill in the boxes in the selection guides illustrated below.

Toggle Switch Selection Guide

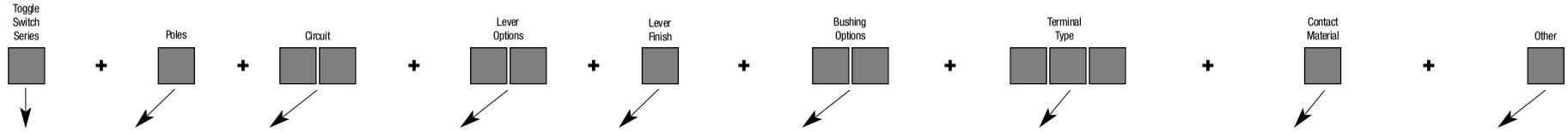

	Poles		Circuits				Lever Options		Finishes		Bushing Options		Terminal/Mounting Options		Contact Material		Other Options	
Series	No.	Code	Keyway		Pos. "C"	Code	Type	Code	Finish	Code	Type	Code	Type	Code	Type	Code	Type	Code
A	1 Pole	1	ON	OFF	ON	21	.410 Bat (Std.)	S	Bright Chrome	1	.350 Threaded (Std.)	Y	Solder Lugs (Std.)	Z				
	2 Pole	2	ON	NONE	ON	23	.200 Bat (Std.)	M	Satin Chrome	2	.370 Threaded High Torque	Y1	Quick Connect	Z3				
	3 Pole	3	ON	NONE	ON*	26			Black	3	.370 Threaded High Torque w/ Flat	Y4	Right Angle PC (Std.)	A	Gold/Nickel/Brass	B	Epoxy Sealed Terminals	Std.
	4 Pole	4	ON*	OFF	ON*	27	**Flatted Bats**				.437 Threaded	Y5	Right Angle PC / Snap-in	A3	Gold/Nickel/Silver	G		
			ON	OFF	ON*	31	.840 Flat	P1			.350 Smooth with Keyway	Y91	Right Angle PC .156	A2	Coin Silver	Q	Anti-Rotation	P
			ON	ON	ON	32	.450 (Std.)	P3			.350 Smooth	Y9	Right Angle PC .200	A7				
			ON	ON	ON*	33	.250 Flat	P4			.280 Threaded (Std.)	D	Vertical PC .100 Spacing	AV	**Optional Platings**			
			NONE	ON	ON*	34					.280 Smooth with keyway	D91	Vertical PC .150 Spacing (Std.)	AV2	Same as B, G, Q, respectively			
			ON*	ON	ON*	35	**Longer Bats**				.280 Smooth	D9	Vertical PC .150 Snap-in	AV3	Terminals tin-lead alloy	K		
			NONE	ON	ON	53	.840 Bat	L0			.280 Smooth with Flat	D8	Right Angle extended PC	AW	Terminals tin-lead alloy	L		
							.640 Bat	L1			.350 Flatted with Shoulder (Std.)	H	Right Angle extended PC	AW1	Terminals tin-lead alloy	M		
							.550 Bat	L2			.350 Keyway with Shoulder	H3	Right Angle extended PC	AW3				
											.315 Threaded High Torque	H31	Right Angle extended PC	AW4	K,L,M not available with Z&Z3			
			* Momentary Contact				**Plastic Bats**		**L3 and L4 Colors**		8mm Threaded High Torque	H4	Printed Circuit Terminals (Std.)	C				
							.840 Plastic	L3	Black Nylon	4	Splashproof lever & Bushing Seal	CW	Right Angle Same Throw	R				
							.571 Plastic	L4	Red Nylon	5	Splashproof lever Seal Only CX		Right Angle Opposite Throw	R2				
									White Nylon	6			.555 PC Support Bracket	V20				
													.555 PC Snap-In Bracket **HD**	V21				
							Large Bats				**15/32" Bushing Options for Large Bats**		.460 PC Support Bracket (Std.)	V30				
							15/32" Bushing				15/32 Dia. (Std.)	T	.460 PC Snap-In Bracket	V31				
							.468 Large	T1			Splashproof Lever & Panel Seal	TW	.630 PC Support Bracket	V40				
							.687 Large	T			15/32 Splashproof Lever Seal Only	TX	.630 PC Snap-In Bracket	V41				
							.610 Flatted	T2					.460 PC Support Bracket	V60				
													.460 PC Snap-In Bracket **HD**	V61				
							Lever Locking Actuators				For Locking Lever Only	K	.630 PC Support Bracket	V70				
													.630 PC Snap-In Bracket **HD**	V71				
							Std. taper threaded	K1					.953 PC Support Bracket	V80				
							Dome threaded	K2					.953 PC Snap-In Bracket **HD**	V81				
							Dome unthreaded	K9					1.150 PC Support Bracket	V90				
							Taper threaded	K12					1.150 PC Snap-In Bracket	V91				
							Taper unthreaded	K19					.750 Wire Wrap	W				
													.964 Wire Wrap	W1				
													.425 Wire Wrap	W3				
													1.062 Wire Wrap	W4				

SPECIFICATOINS:

Contact Ratings -
Letter codes G,L and Q,M - 6 amp at 125 VAC, 3 amp @ 250 VAC (U.L. recognized, CSA certified) or 6 amp at 28 VDC resistive. Letter codes B,K and G,L – 0.5 volt-amp (VA) maximum @ 28 V maximum (AC or DC).

Life Under Load - 60,000 make-and-break cycles — resistive load only.

Initial Contact Resistance -10 milliohms maximum initial at 3 VDC, 100 ma for both silver and gold plated contacts.

Insulation Resistance - 1,000 megohms, min.

Dielectric Strength - 1,000 volts RMS minimum at sea level.

Weight (including hardware) - SP 0.19 oz.; DP 0.23 oz.; 3-pole 0.28 oz.; 4-pole 0.32 oz.

STANDARD MATERIALS:

Base (body) - Diallyl Phthalate (DAP).
Lever (toggle) - Brass, chrome plated.
Flat Lever - Brass, satin chrome finish.
Locking Lever Cap - Anodized aluminum.
Bushing - Brass, nickel plated.
Clamp (frame) - Stainless steel.
Support Brackets - Steel, tin plated.
Switching Contacts and Rockers -
Letter Code B,K - gold/nickel/brass
Letter Code G,L - gold/nickel/silver
Letter Code Q,M - Coin silver
Center Terminal
Letter Codes B,K, G,L - Gold flash/nickel/brass
Letter Code Q,M - Silver plated brass.
Epoxy sealed terminals are supplied as standard

STANDARD DIMENSIONS & PART NUMBERS

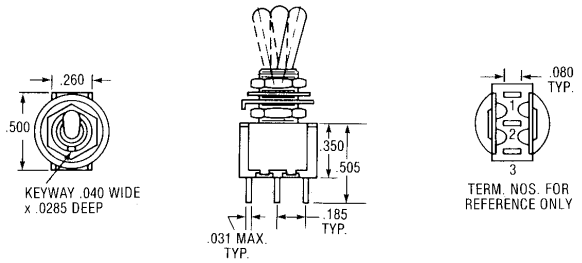

ONE POLE

Keyway			Code	Part Number
		POS. "C"		
ON	OFF	ON	21	A121S1YZQ
ON	NONE	ON	23	A123S1YZQ
ON	NONE	ON*	26	A126S1YZQ
ON*	OFF	ON*	27	A127S1YZQ

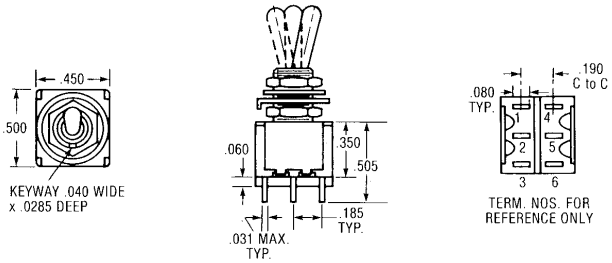

TWO POLE

Keyway			Code	Part Number
		POS. "C"		
ON	OFF	ON	21	A221S1YZQ
ON	NONE	ON	23	A223S1YZQ
ON	NONE	ON*	26	A226S1YZQ
ON*	OFF	ON*	27	A227S1YZQ

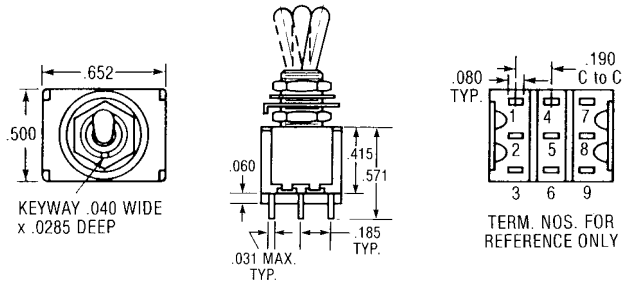

THREE POLE

Keyway			Code	Part Number
		POS. "C"		
ON	OFF	ON	21	A321S1YZQ
ON	NONE	ON	23	A323S1YZQ
ON	NONE	ON*	26	A326S1YZQ
ON*	OFF	ON*	27	A327S1YZQ

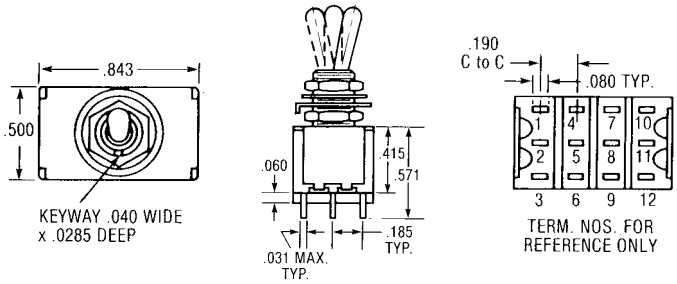

FOUR POLE

Keyway			Code	Part Number
		POS. "C"		
ON	OFF	ON	21	A421S1YZQ
ON	NONE	ON	23	A423S1YZQ
ON	NONE	ON*	26	A426S1YZQ
ON*	OFF	ON*	27	A427S1YZQ

TOGGLE LEVER OPTIONS

S — Std. Bat (.410")

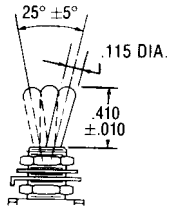

T — Large Toggle

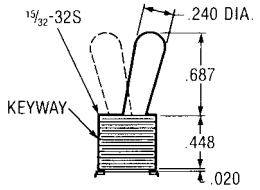

T1 — Large Toggle

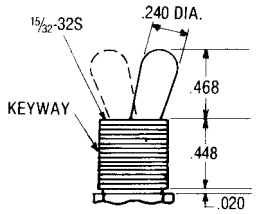

T2

NEW

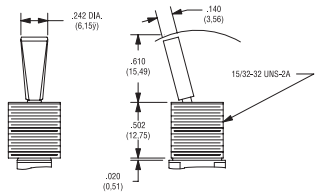

M — Short (.200")

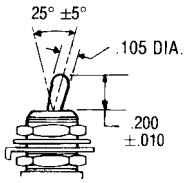

P1 — Flatted (.840")

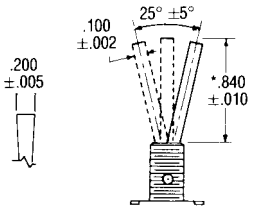

Not available with lever seal

P3 — Flatted (.448")

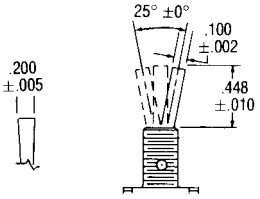

Not available with lever seal

P4 — Flatted (.250")

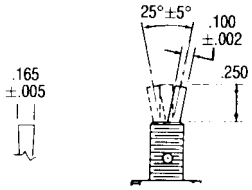

Not available with lever seal

L0 — Long (.840")

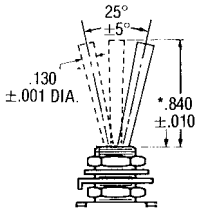

Lever shown with dimensions for .352 long bushings

L1 — Long (.640")

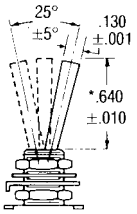

Lever shown with dimensions for .352 long bushings

L2 — Long (.550")

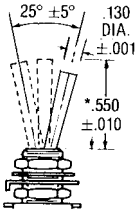

Lever shown with dimensions for .352 long bushings

L3 — Plastic (.840")

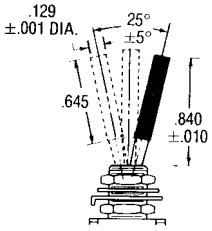

Lever shown with dimensions for .352 long bushings

L4 — Plastic (.571")

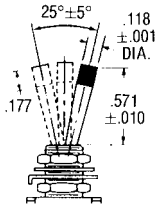

Lever shown with dimensions for .352 long bushings

K1 — Locking Lever

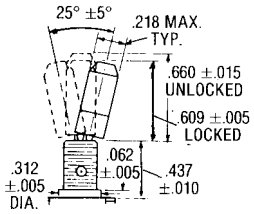

Lever cap supplied with anodized finish only. No lever seals.

K12 — Threaded
K19 — Unthreaded

NEW

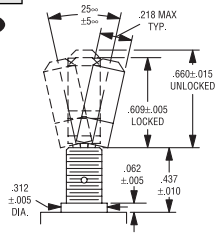

Lever cap supplied with anodized finish only. No lever seals.

K2 — Threaded
K9 — Unthreaded

NEW

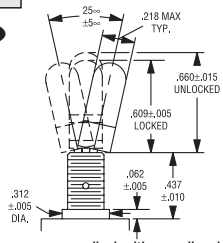

Lever cap supplied with anodized finish only. No lever seals.

LEVER LOCK BUSHING STYLES

STYLE 1	STYLE 2	STYLE 3	STYLE 4	STYLE 5
ON-OFF-ON	ON-NONE-ON	ON-NONE-ON*	ON*-OFF-ON*	ON-OFF-ON*
	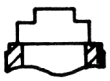			
Locked In Three Positions	Locked Out Of Center Positions	Locked Into Side Opposite Keyway – Momentary Keyway Side	Locked In Center Position – Momentary Either Side	Locked In Center Position – Momentary Keyway Side

BUSHING OPTIONS

CX Threaded with Lever Seal
Y Threaded
Y9 Smooth (No Keyway)
Y91 Smooth w / Keyway

NEW

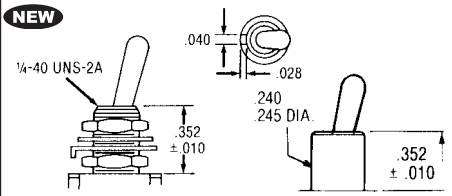

D Threaded
D9 Smooth (No Keyway)
D91 Smooth w / Keyway
D8 Smooth w / Flat

NEW

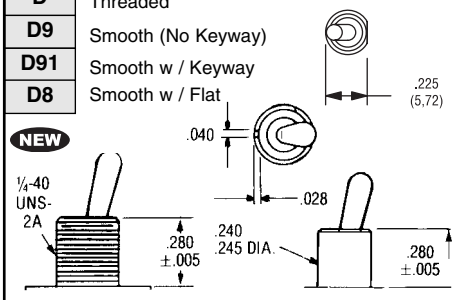

Add 0.070 to actuator length when using a .280 long bushing.

H High Torque Flatted with Shoulder

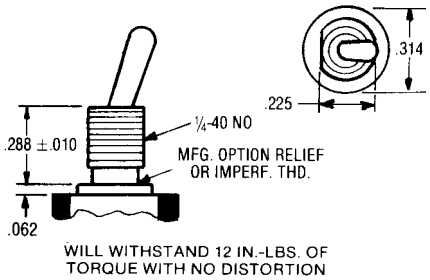

H4 8mm Threaded High Torque

NEW

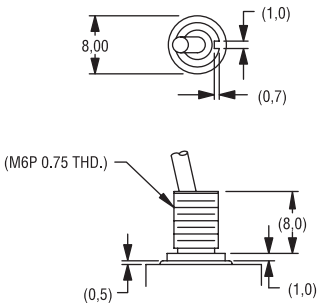

Will withstand 12 in-lbs of torque with no distortion.

H3 High Torque

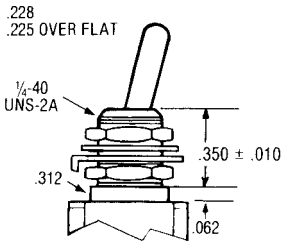

WILL WITHSTAND 12 IN.-LB of
TORQUE WITH NO DISTORTION.
FOR H3 OPTION SUBTRACT .020
FROM ALL TOGGLE LENGTHS.

H31 (.315") Threaded High Torque

NEW

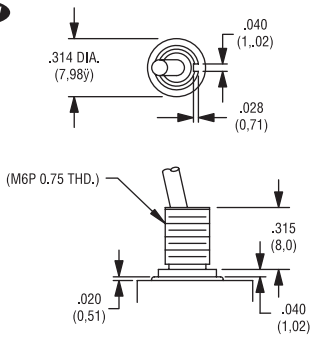

Will withstand 12 in-lbs of torque with no distortion.

Y1 (.370") Threaded High Torque
Y4 (.370") Flat Threaded High Torque

NEW

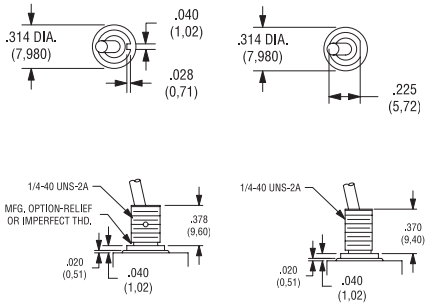

Y5 Long Bushing (.437")

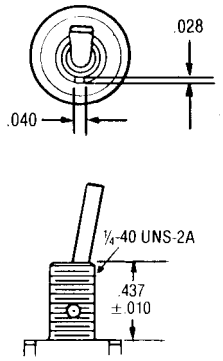

T&TX Bushing for T, T1 and T2 Bats

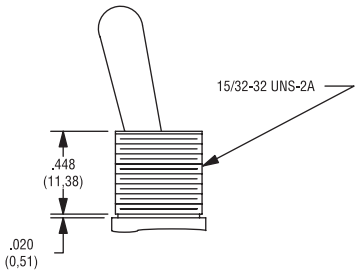

CW Splashproof Sealed Lever and Panel Seal

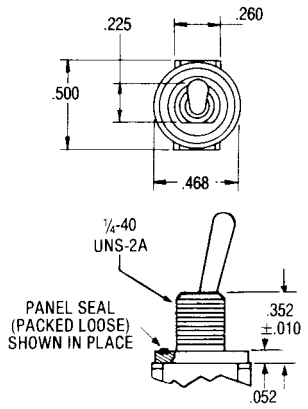

TW Splashproof Sealed Lever and Panel Seal

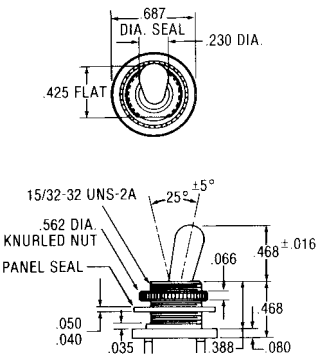

P Anti-Rotation

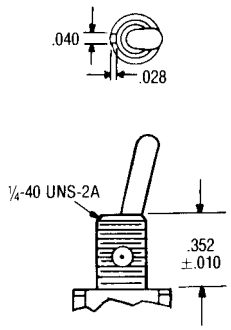

ANTI-ROTATION (OPTION P)
IS AVAILABLE FOR MOST
BUSHING TOGGLE COMBINATIONS.

Anti rotation for 15/32" bushing not done w/pin.

TERMINATION SWITCHES

C	W	W1	W3	W4	Z	Z3
Printed Circuit	Wire-Wrap	Wire-Wrap	Wire-Wrap	Wire-Wrap	Standard	Quick Connect

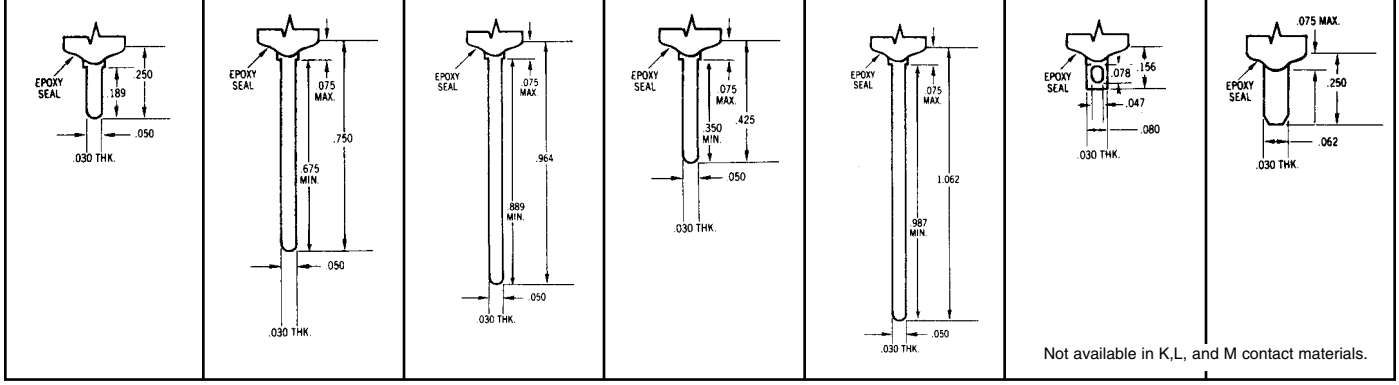

Not available in K,L, and M contact materials.

TERMINATION / MOUNTING SWITCHES

A / **A3** — Right Angle PC / Std. Right Angle Snap in

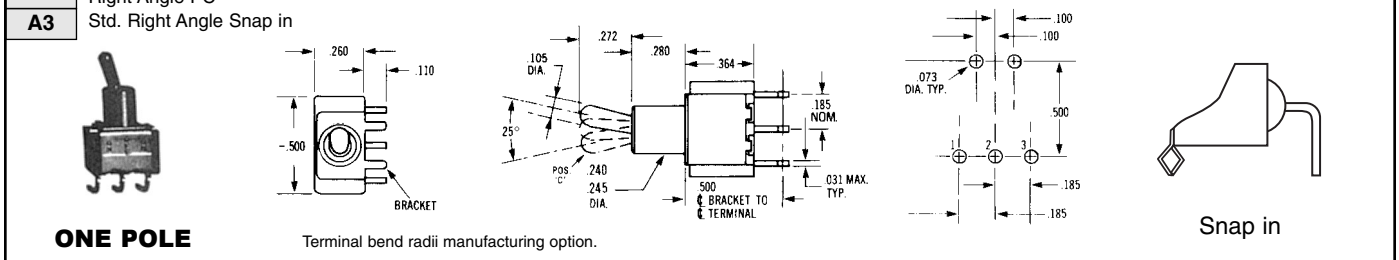

ONE POLE — Terminal bend radii manufacturing option.

A / **A3** — Right Angle PC / Std. Right Angle Snap in

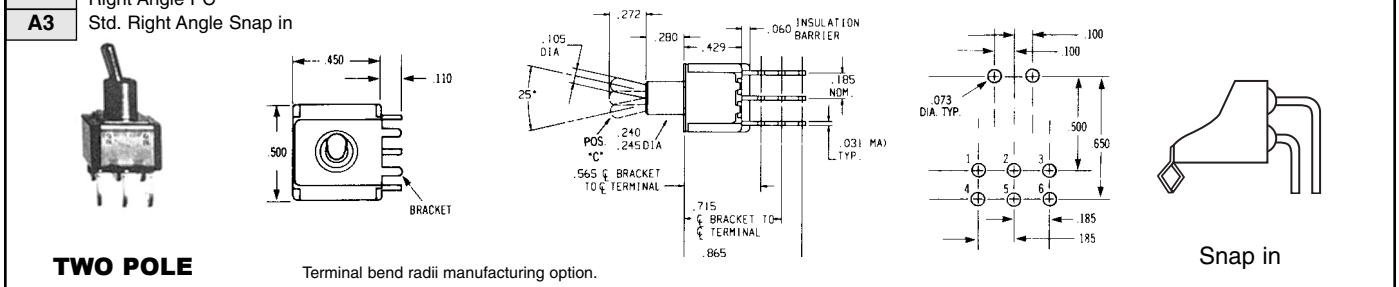

TWO POLE — Terminal bend radii manufacturing option.

A / **A3** — Right Angle PC / Std. Right Angle Snap in

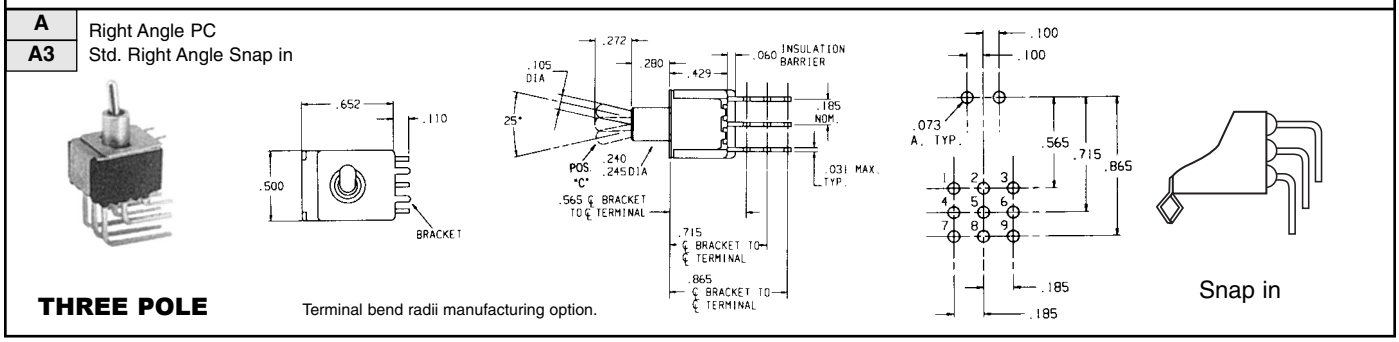

THREE POLE — Terminal bend radii manufacturing option.

EXTENDED TERMINAL OPTIONS (Right Angle PC Terminals)

AW | **AW1** | **AW3** | **AW4** — Right Angle, Extended PC Thru-Hole

NEW

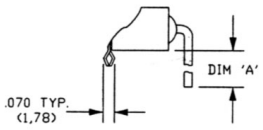

OPTION CODE	DIM "A"
AW	.50
AW1	.72
AW3	.20
AW4	.83

ONE POLE

AW | **AW1** | **AW4** — Right Angle, Extended PC Thru-Hole

NEW

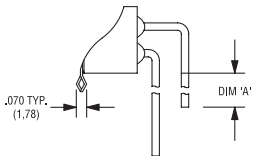

OPTION CODE	DIM "A"
AW	.19
AW1	.40
AW4	.50

TWO POLE

AW4 — Right Angle, Extended PC Thru-Hole

NEW

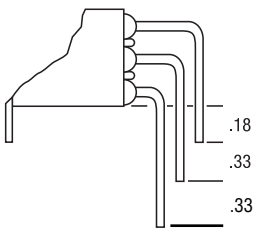

THREE POLE

TERMINATION / MOUNTING OPTIONS

A2 Right Angle PC .156" Spacing

NEW

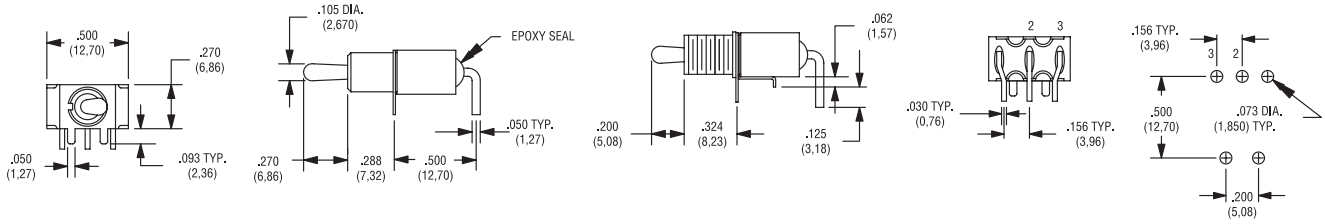

Not available w/ CW, H, H3, T, TX, TW, T1, K2, K9, K19, H4, Y1, & Y4. Large bushing and shoulders interfere with printed circuit board.

A4 Right Angle PC .156" Spacing

NEW

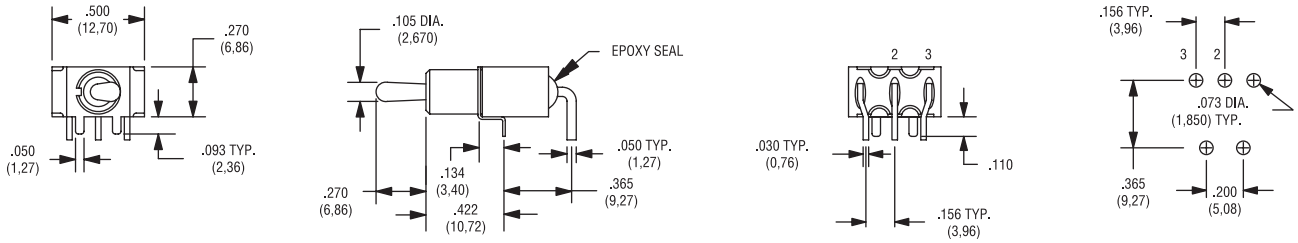

Not available w/ CW, H, H3, T, TX, TW, T1, K2, K9, K19, H4, Y1, & Y4. Large bushing and shoulders interfere with printed circuit board.

A7 Right Angle PC .200" Spacing

NEW

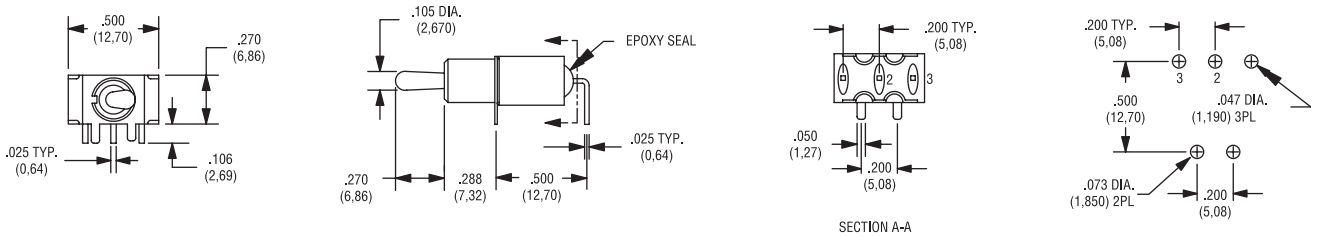

Not available w/ CW, H, H3, T, TX, TW, T1, K2, K9, K19, H4, Y1, & Y4. Large bushing and shoulders interfere with printed circuit board.

R Right Angle Same Throw

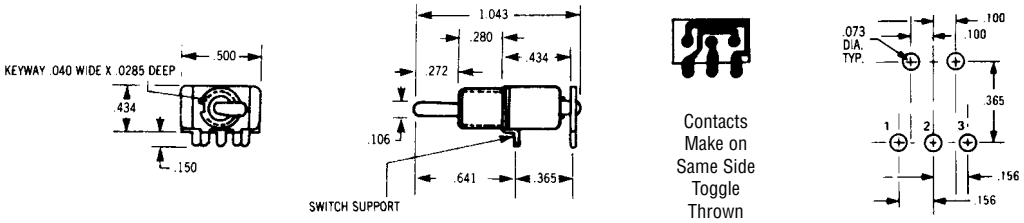

ONE POLE

Not available w/ CW, H, H3, T, TX, TW, T1, K2, K9, K19, H4, Y1, & Y4. Large bushing and shoulders interfere with printed circuit board.
Not UL or CSA recognized.

R2 Right Angle Opposite Throw

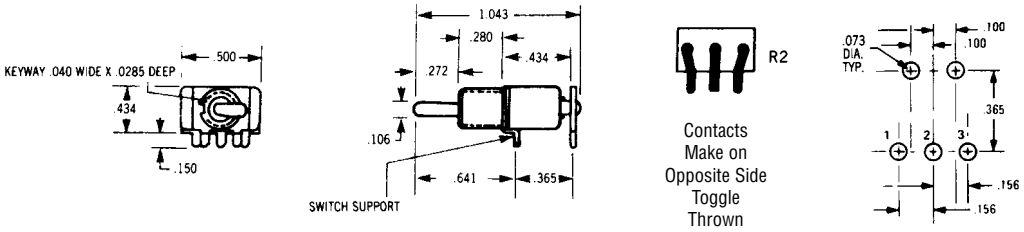

ONE POLE

Not available w/ CW, H, H3, T, TX, TW, T1, K2, K9, K19, H4, Y1, & Y4. Large bushing and shoulders interfere with printed circuit board.

TERMINATION / MOUNTING OPTIONS

AV	w/.100” Terminal Spacing
AV2	w/.150” Terminal Spacing (pictured below)
AV3	w/.150” Terminal Spacing Snap in Bracket

NEW

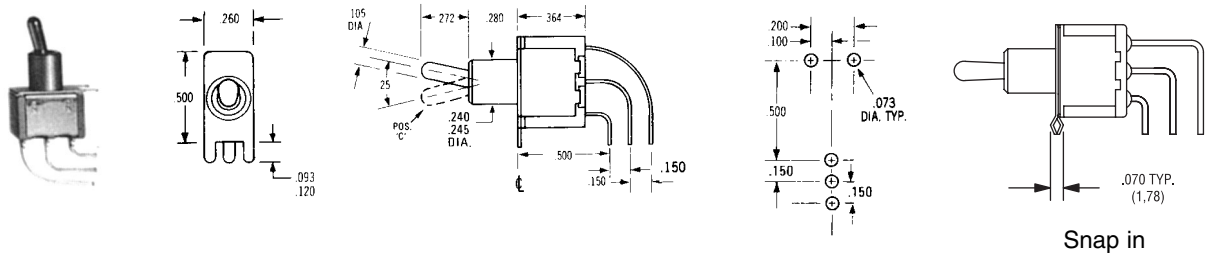

ONE POLE

Terminal bend radii manufacturing option.

AV	w/.100” Terminal Spacing
AV2	w/.150” Terminal Spacing (pictured below)
AV3	w/.150” Terminal Spacing Snap in Bracket

NEW

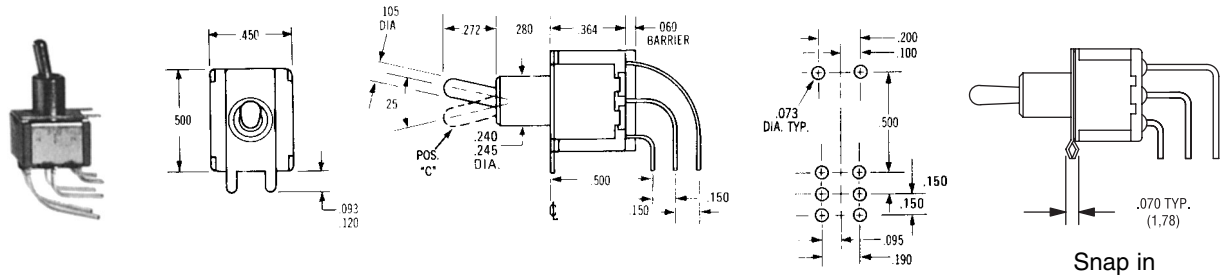

TWO POLE

Terminal bend radii manufacturing option.

AV	w/.100” Terminal Spacing
AV2	w/.150” Terminal Spacing (pictured below)
AV3	w/.150” Terminal Spacing Snap in Bracket

NEW

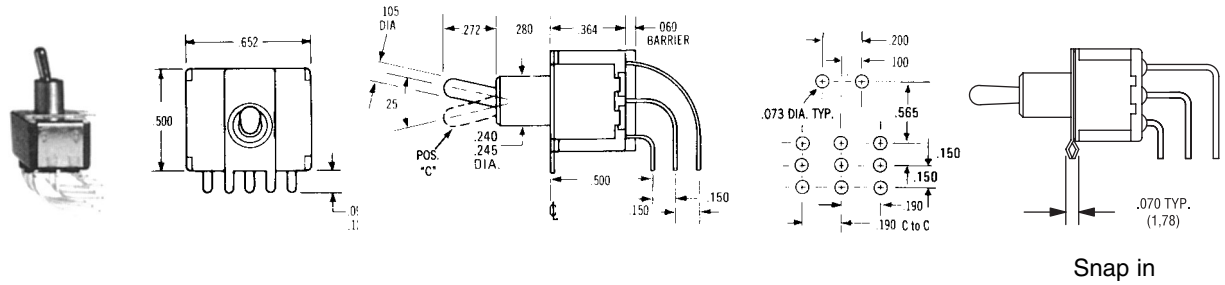

THREE POLE

Terminal bend radii manufacturing option.

AV	w/.100” Terminal Spacing
AV2	w/.150” Terminal Spacing (pictured below)
AV3	w/.150” Terminal Spacing Snap in Bracket

NEW

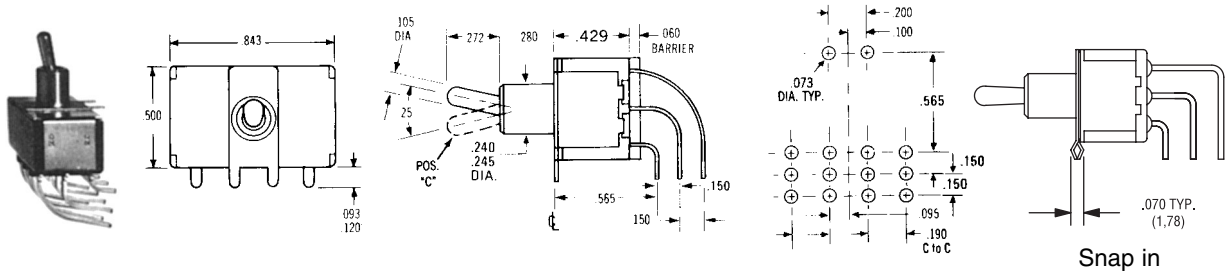

FOUR POLE

Terminal bend radii manufacturing option.

TERMINATION MOUNTING OPTIONS

V20 .555” high bracket **HD**
V21 Snap In **HD**
NEW

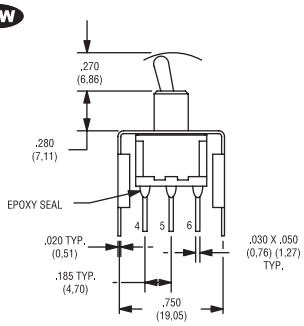

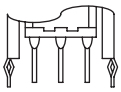

Snap in

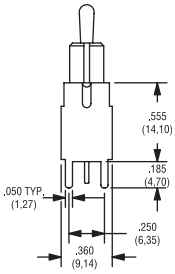

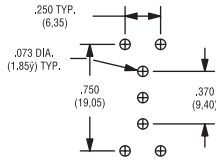

ONE POLE

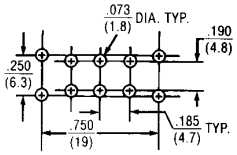

TWO POLE

V30 .460” high bracket
V31 Snap In
NEW

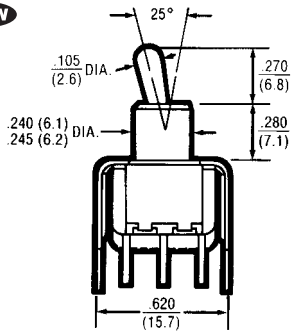

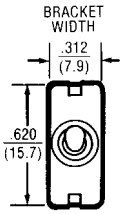

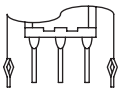

Snap in

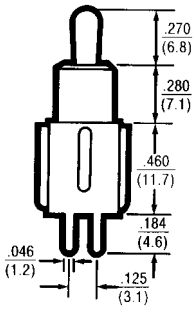

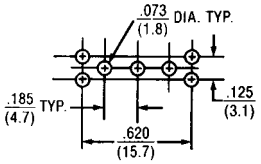

ONE POLE

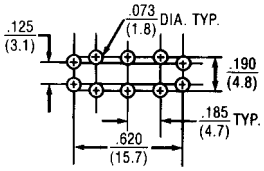

TWO POLE

V40 .630” high bracket
V41 Snap In
NEW

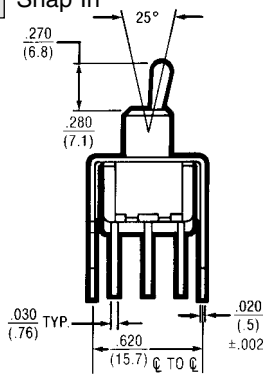

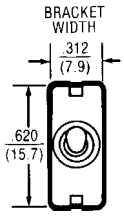

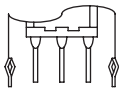

Snap in

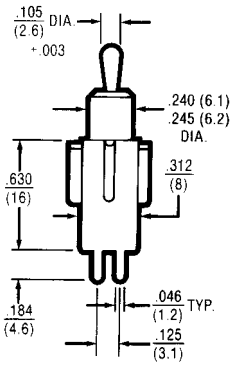

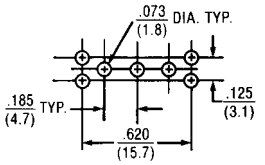

ONE POLE

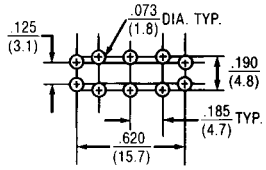

TWO POLE

V60 .460” high bracket **HD**
V61 Snap In **HD**
NEW

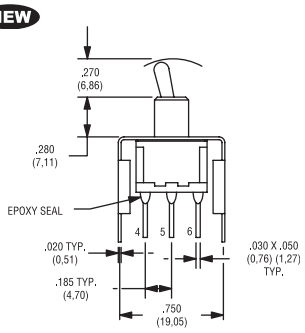

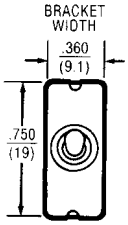

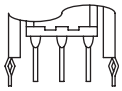

Snap in

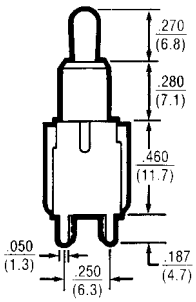

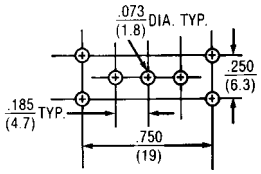

ONE POLE

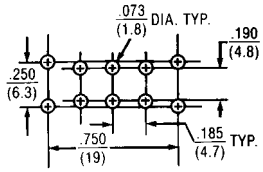

TWO POLE

TERMINATION / MOUNTING OPTIONS

V70 .630” high bracket **HD**
V71 Snap In **HD**

NEW

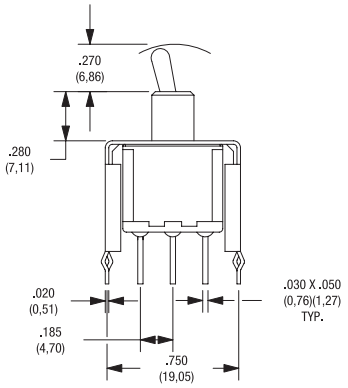

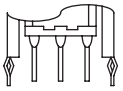

Snap in

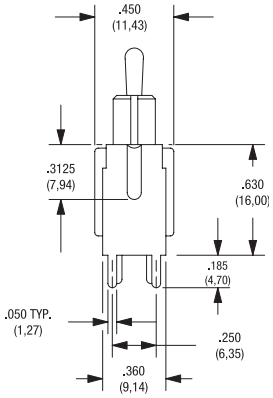

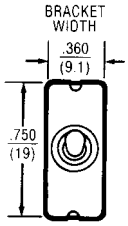

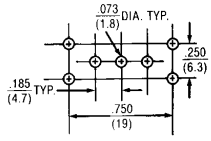

ONE POLE

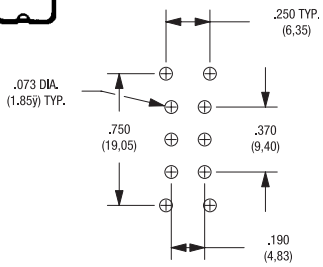

TWO POLE

V80 .953” high bracket **HD**
V81 Snap In **HD**

NEW

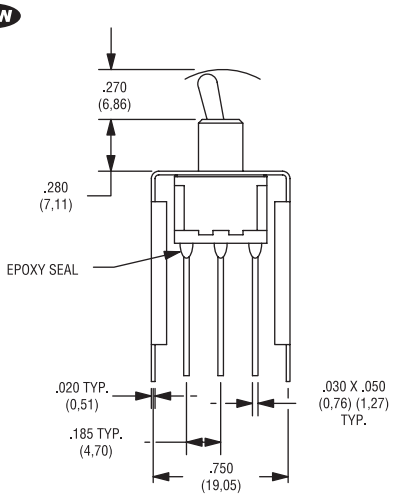

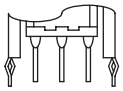

Snap in

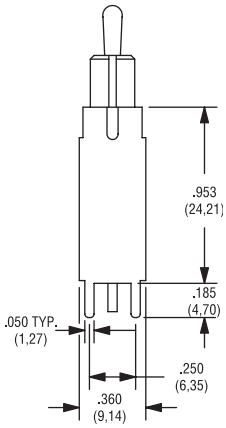

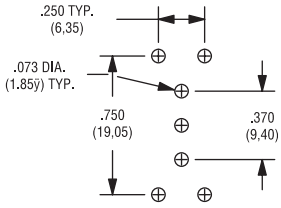

ONE POLE

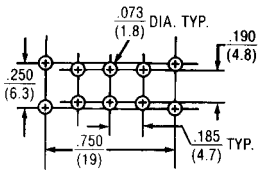

TWO POLE

V90 1.150” high bracket
V91 Snap In

NEW

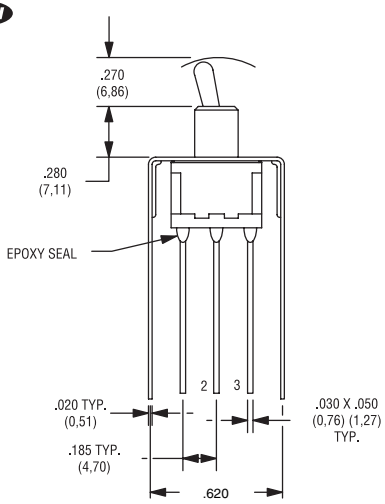

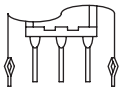

Snap in

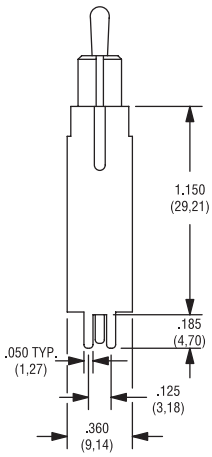

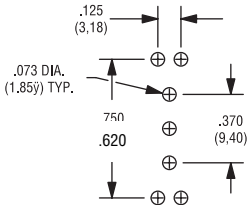

ONE POLE

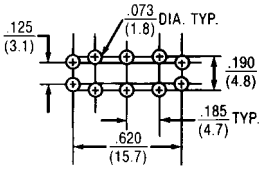

TWO POLE

ELECTROSWITCH
•ELECTRONIC PRODUCTS
UNIT OF ELECTRO SWITCH CORP.

2010 Yonkers Road
Raleigh, North Carolina 27604 USA
Phone: 888-768-2797 or 919-833-0707
Fax: 800-909-9171 or 919-833-8016
Web site: http://www.electro-nc.com
E-mail: sales@electro-nc.com

ELECTROSWITCH
ELECTRONIC PRODUCTS
UNIT OF ELECTRO SWITCH CORP.

NEW!

IP67 Sealed Thumb Switches

Highest quality for the most demanding applications

TS Series

RoHS

Robust Design

Environmentally Sealed

Compact Size

Electroswitch
Phone: 888-768-2797
sales@electro-nc.com

ELECTROSWITCH
ELECTRONIC PRODUCTS
UNIT OF ELECTRO SWITCH CORP.

Contact Electroswitch
Phone: 888-768-2797
sales@electro-nc.com

IP67 Sealed Thumb Switches

Highest quality for the most demanding applications

Catalog No.	Poles	Action	Actuator	Terminal	Terminal Plating	Actuator Color
TS121SZQ2	1	on-off-on	Standard	Solder	Silver	Black
TS123SZQ2	1	on-none-on	Standard	Solder	Silver	Black
TS126SZQ2	1	on-none-mom	Standard	Solder	Silver	Black
TS127SZQ2	1	mom-off-mom	Standard	Solder	Silver	Black
TS131SZQ2	1	on-off-mom	Standard	Solder	Silver	Black

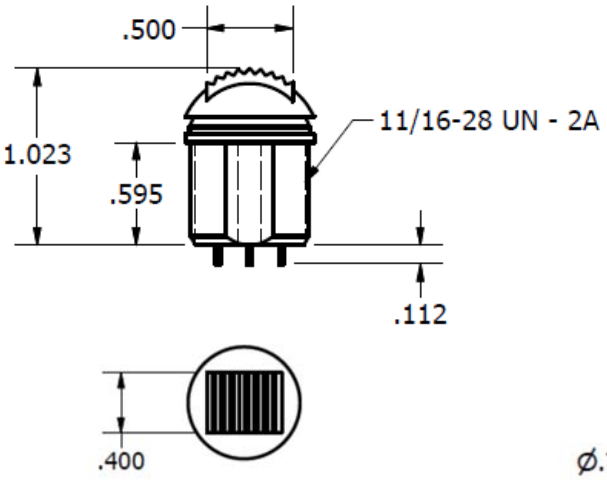

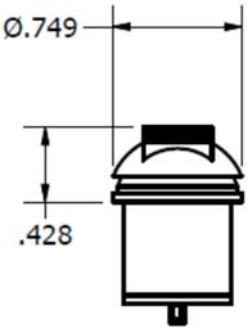

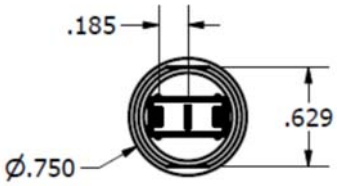

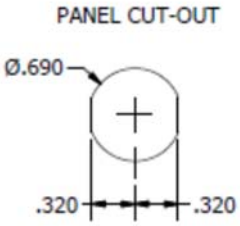

SPECIFICATIONS:

Contact Ratings 6 amp at 125 VAC, 3 amp @ 250 VAC

Life Under Load — 60,000 make-and-break cycles — resistive load only.

Mechanical Life— 60,000+ cycles

Initial Contact Resistance — 10 milliohms maximum 3 VDC, 100 ma.

Insulation Resistance — 1,000 megohms, min.

Dielectric Strength — 1,000 volts rms at sea level.

Operating Temperature — -30 degrees C to 85 degrees C.

All Information subject to change without notice

Flier EEP–TS RevA ©Copyright Electroswitch 2015

ELECTROSWITCH
ELECTRONIC PRODUCTS
UNIT OF ELECTRO SWITCH CORP.

NEW!

Compact 3 Way Toggle Switch

The New JT-1601 Toggle Switch is designed to provide Guitar manufacturers a compact silent action switch. It requires less space and does not produce the noise that old style toggles are known to have.

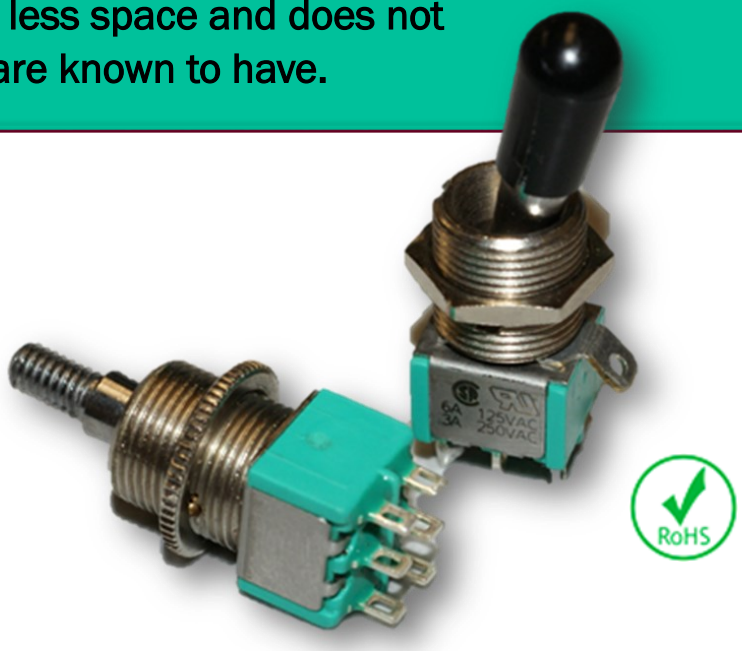

JT-1601

- On-On-On Toggle
- Requires Less Space
- Produces Less Noise

Compact Size

Smooth Silent-Action

Sturdier, Noiseless Toggle Switch

Electroswitch
Phone: 888-768-2797
sales@electro-nc.com

ELECTROSWITCH
ELECTRONIC PRODUCTS
UNIT OF ELECTRO SWITCH CORP.

Contact Electroswitch
Phone: 888-768-2797
sales@electro-nc.com

Compact 3 Way Toggle Switch

The JT-1601 Toggle Switches deliver sub-miniature solutions for Guitar applications that require less space, smooth action, and less noisy feedback in a durable small package.

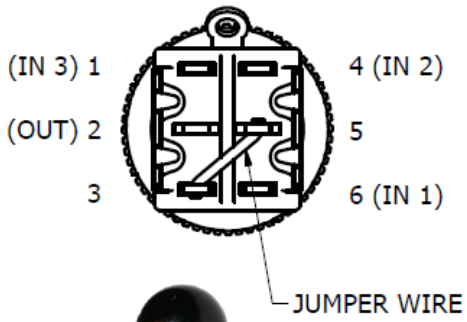

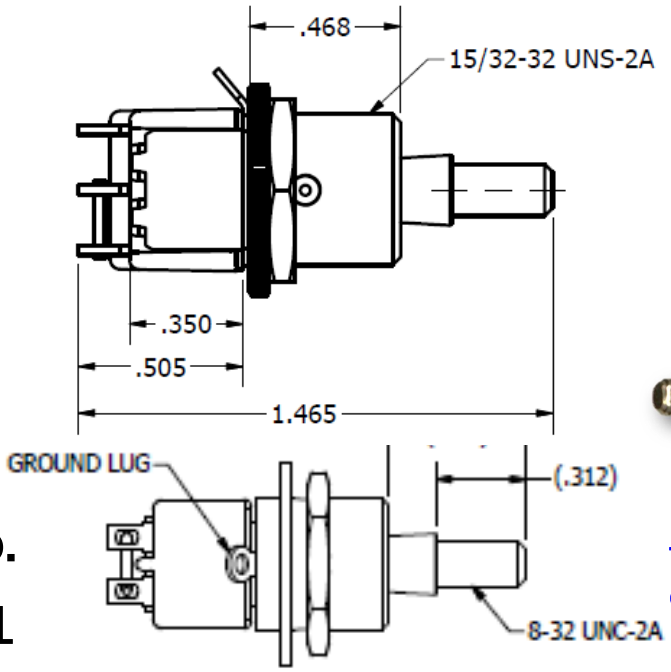

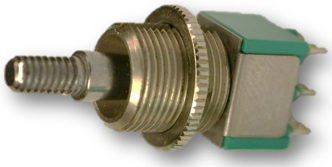

Part No.
JT-1601

Threaded bat for Guitar switch caps

RoHS

SPECIFICATIONS:

Contact Ratings —6 amp at 125 VAC, 3 amp @ 250 VAC (U.L. recognized, CSA certified) or 6 amp at 28 VDC resistive.

Life Under Load — 60,000 make-and-break cycles — resistive load only.

Initial Contact Resistance — 10 milliohms maximum 3 VDC, 100 ma for both silver and gold plated contacts.

Insulation Resistance — 1,000 megohms, min.

Dielectric Strength — 1,000 volts rms at sea level.

Bushing Strength — 12 pound-inches without physical damage to switch.

Weight (including hardware) — DP 0.23 oz.

MATERIALS:

Base (body) — Diallyl Phthalate

Lever (toggle) — Brass, chrome plated.

Bushing — Brass, nickel plated.

Clamp (frame) — Stainless steel.

All Information subject to change without notice

Flier-EEP–JT RevA ©Copyright Electroswitch 2016

ELECTROSWITCH
ELECTRONIC PRODUCTS
UNIT OF ELECTRO SWITCH CORP.

Contact Electroswitch
Phone: 888-768-2797
sales@electro-nc.com

IP67 Sealed Toggle Switches

Highest quality for the most demanding applications

3000 Series

Standard 15/32" diameter bushing. Standard Bat length is .560".

Current Rating	Catalog No.		Action	Termination
15A -125VAC, 10A-250VAC	3005C	Fig 1	SPST on-none-off	.250" QC
15A -125VAC, 10A-250VAC	3005D	Fig 2	SPST on-none-off	6" Wire Leads, #16 Gauge
15A -125VAC, 10A-250VAC	3001C	Fig 1	SPDT on-none-on	.250" QC
15A -125VAC, 10A-250VAC	3001D	Fig 2	SPDT on-none-on	6" Wire Leads, #16 Gauge
15A -125VAC, 10A-250VAC	3002C	Fig 1	SPDT on-off-on	.250" QC
15A -125VAC, 10A-250VAC	3002D	Fig 2	SPDT on-off-on	6" Wire Leads, #16 Gauge

3000 Series Toggle

Electrical Rating: 15A - 125 VAC , 10A - 250 VAC

Life Cycles: 100,000 **Electrical** 100,000 **Mechanical**

Operating Temp: -10°C to +65°C

Sealing: seal tested per IP67 standards to withstand submersion in water to a depth of 1 meter for 30 minutes, Meets IP68

Dielectric Strength 1000 Volts RMS Minimum

Mounting Means 15/32" Bushing, Keyway .078 - .083 Wide X .037 - .043 Deep, Standard Hardware supplied

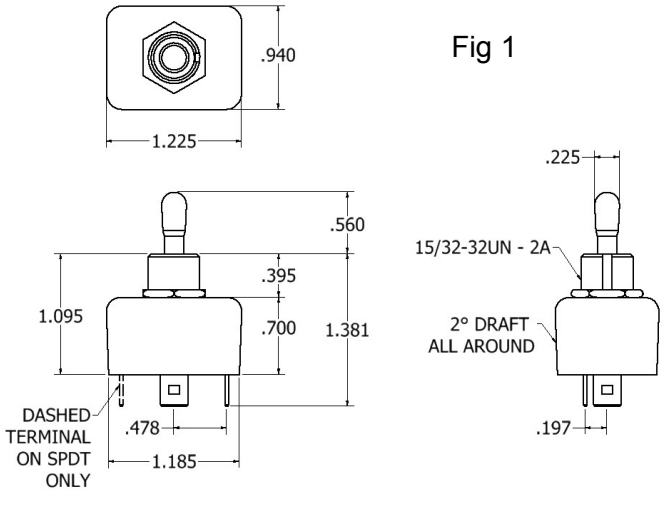

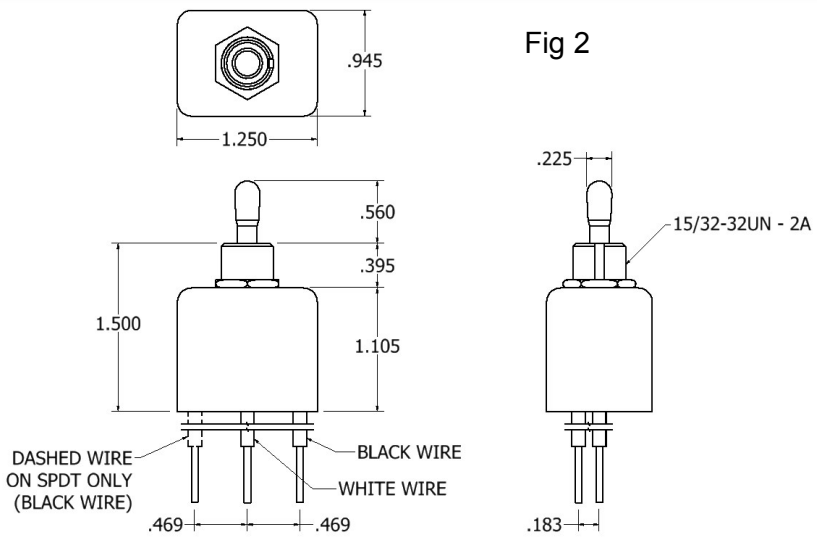

All Information subject to change without notice

Flier EEP–SG-15 RevA ©Copyright Electroswitch 2014

ELECTROSWITCH
ELECTRONIC PRODUCTS
UNIT OF ELECTRO SWITCH CORP.

Contact Electroswitch
Phone: 888-768-2797
sales@electro-nc.com

IP67 Sealed Toggle Switches

Highest quality for the most demanding applications

3100 Series

Standard 15/32" diameter bushing. Standard Bat length is .560".

Current Rating	Catalog No.		Action	Termination
6A -125VAC, 3A-250VAC	3105C	Fig 1	SPST on-none-off	.250" QC
6A -125VAC, 3A-250VAC	3105D	Fig 2	SPST on-none-off	6" Wire Leads, #16 Gauge
6A -125VAC, 3A-250VAC	3101C	Fig 1	SPDT on-none-on	.250" QC
6A -125VAC, 3A-250VAC	3101D	Fig 2	SPDT on-none-on	6" Wire Leads, #16 Gauge
6A -125VAC, 3A-250VAC	3102C	Fig 1	SPDT on-off-on	.250" QC
6A -125VAC, 3A-250VAC	3102D	Fig 2	SPDT on-off-on	6" Wire Leads, #16 Gauge

3100 Series Toggle

Electrical Rating: 6A - 125 VAC , 3A - 250 VAC
Life Cycles: 25,000 **Electrical** (Optional 75,000 with silver rocker) 50,000 **Mechanical** (Optional 100,000 with silver rocker)
Operating Temp: -10°C to +65°C
Sealing: seal tested per IP67 standards to withstand submersion in water to a depth of 1 meter for 30 minutes, Meets IP68
UL Recognized **File No. E66512, Vol 1, Sec.12**
Dielectric Strength 1000 Volts RMS Minimum
Mounting Means 15/32" Bushing, Keyway .078 - .083 Wide X .037 - .043 Deep, Standard Hardware supplied

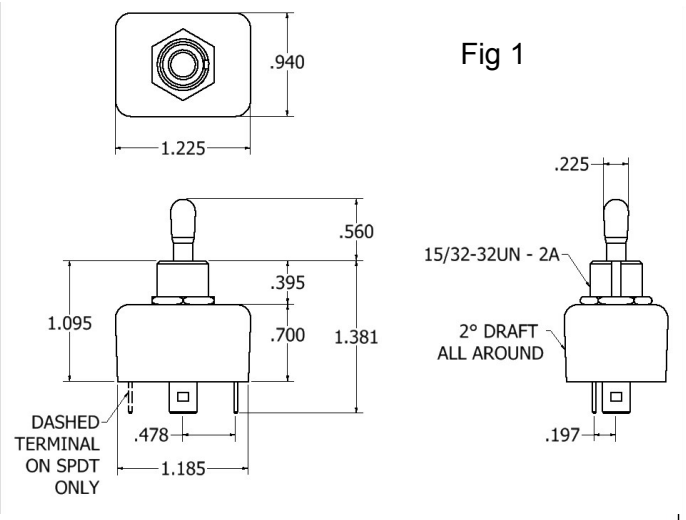

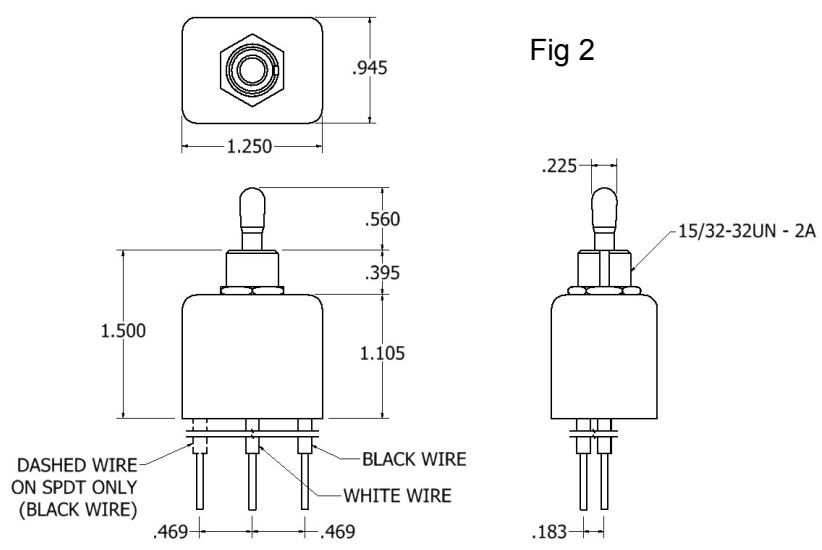

All Information subject to change without notice

Flier EEP–SG-6 RevA ©Copyright Electroswitch 2014

ELECTROSWITCH
ELECTRONIC PRODUCTS
UNIT OF ELECTRO SWITCH CORP.

Contact Electroswitch
Phone: 888-768-2797
sales@electro-nc.com

IP67 Sealed Toggle Switches

Highest quality for the most demanding applications

3300 Series

Standard 15/32" diameter bushing. Standard Bat length is .560".

Current Rating	Catalog No.		Action	Termination
20A -125VAC, 1 HP	3305C	Fig 1	SPST on-none-off	.250" QC
20A -125VAC, 1 HP	3305D	Fig 2	SPST on-none-off	6" Wire Leads, #16 Gauge
20A -125VAC, 1 HP	3301C	Fig 1	SPDT on-none-on	.250" QC
20A -125VAC, 1 HP	3301D	Fig 2	SPDT on-none-on	6" Wire Leads, #16 Gauge
20A -125VAC, 1 HP	3302C	Fig 1	SPDT on-off-on	.250" QC
20A -125VAC, 1 HP	3302D	Fig 2	SPDT on-off-on	6" Wire Leads, #16 Gauge

3300 Series Toggle

Electrical Rating: 20A - 125 VAC , 10A - 250 VAC, 1 HP 125-250 VAC

Life Cycles: 100,000 **Electrical** 100,000 **Mechanical**

Operating Temp: -10°C to +65°C

Sealing: seal tested per IP67 standards to withstand submersion in water to a depth of 1 meter for 30 minutes, Meets IP68

Dielectric Strength 1000 Volts RMS Minimum

Mounting Means 15/32" Bushing, Keyway .078 - .083 Wide X .037 - .043 Deep, Standard Hardware supplied

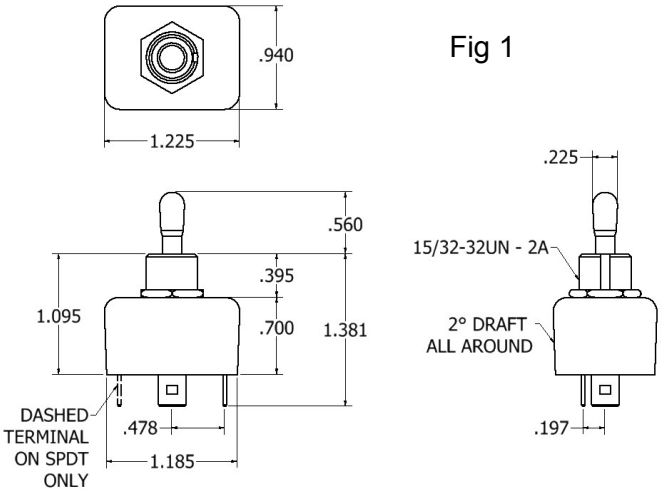

Fig 1

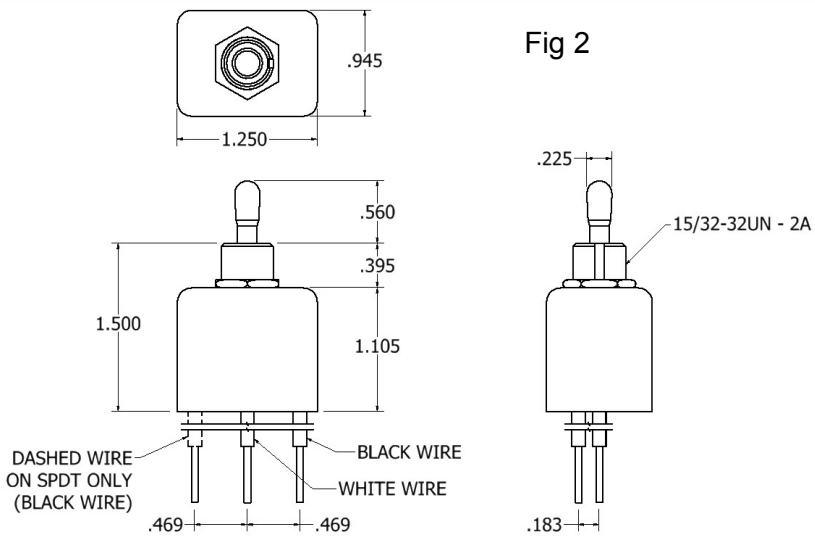

Fig 2

All Information subject to change without notice

Flier EEP–SG-20 RevA ©Copyright Electroswitch 2014

ELECTROSWITCH
•ELECTRONIC PRODUCTS
UNIT OF ELECTRO SWITCH CORP.

This catalog illustrates the standard switch designs presently available. Included are circuit arrangements, electrical ratings, dimensions, mounting, termination and actuator options. This information is organized in a concise chart format to simplify the selection and ordering of the particular switches required.

Why Specify Electroswitch Switches?

Quality

Electroswitch switches are designed to meet the highest standards of quality and reliability, combining maximum performance characteristics with compact size.

Economy

Dependable design features, durabliity, competitive pricing and flexible delivery schedules serve to make Electroswitch switches your best buy.

Service

We cordially welcome all inquiries or questions regarding your switch requirements. Samples of standard catalog items can be furnished immediately upon request. Call or write Electroswitch for a prompt quotation.

UL FILE NO. E7407
CSA FILE NO. LR8435

2010 Yonkers Road, Raleigh, North Carolina 27604 USA
Phone: 888-768-2797 or 919-833-0707
Fax: 800-909-9171 or 919-833-8016
www.electro-nc.com
Email: sales@electro-nc.com

Toggle Switches

RATINGS	CIRCUIT	TOGGLE POSITION			CATALOG NUMBER / TYPE OF TERMINATION			
		UP	CENTER	DOWN (keyway)	.187 Q.C.	SCREW	.250 Q.C.	SOLDER LUG
7100 SERIES TOGGLE								
6A-125VAC 3A-250VAC	SPST	ON	NONE	OFF	7105A	7105B	7105C	7105D
		(ON)	NONE	OFF	7135A	7135B	7135C	7135D
		ON	NONE	(OFF)	7145A	7145B	7145C	7145D
	SPDT	ON	NONE	ON	7101A	7101B	7101C	7101D
		ON	OFF	ON	7102A	7102B	7102C	7102D
		(ON)	NONE	ON	7151A	7151B	7151C	7151D
		(ON)	OFF	ON	7152A	7152B	7152C	7152D
		(ON)	OFF	(ON)	7162A	7162B	7162C	7162D
7000 SERIES TOGGLE								
15A-125VAC 10A-250VAC	SPST	ON	NONE	OFF	7005A	7005B	7005C	7005D
		(ON)	NONE	OFF	7035A	7035B	7035C	7035D
		ON	NONE	(OFF)	7045A	7045B	7045C	7045D
	SPDT	ON	NONE	ON	7001A	7001B	7001C	7001D
		ON	OFF	ON	7002A	7002B	7002C	7002D
		(ON)	NONE	ON	7051A	7051B	7051C	7051D
		(ON)	OFF	ON	7052A	7052B	7052C	7052D
		(ON)	OFF	(ON)	7062A	7062B	7062C	7062D
7200 SERIES TOGGLE								
20A-125VAC 10A-250VAC ¾ HP, 125-250VAC	SPST	ON	NONE	OFF	7205A	7205B	7205C	7205D
		(ON)	NONE	OFF	7235A	7235B	7235C	7235D
		ON	NONE	(OFF)	7245A	7245B	7245C	7245D
	SPDT	ON	NONE	ON	7201A	7201B	7201C	7201D
		ON	OFF	ON	7202A	7202B	7202C	7202D
		(ON)	NONE	ON	7251A	7251B	7251C	7251D
		(ON)	OFF	ON	7252A	7252B	7252C	7252D
		(ON)	OFF	(ON)	7262A	7262B	7262C	7262D

For .687 Toggle And .468 Bushing Length Add-100 To Part Number Specified
For Dust And Moisture Resistant Seal Add "S" To Part Number Specified*
*Standard Feature On Momentary Switches

( ) Denotes Momentary

SPECIFICATIONS

Agency Listings
UL
CSA Certified

Contact Mechanism
Slow-Make/Slow-Break Butt Contact

Contact Material
7100 Series:
Stationary - Copper Alloy/Silver Plated
Movable - Copper Alloy
7000 And 7200 Series:
Stationary (Center) - Copper Alloy/Silver Plated
Stationary (End) - Silver Cadmium Oxide Composite
Movable-Silver Cadmium Oxide Composite

Dielectric Strength
1000 Volts RMS Minimum

Mounting Means
15/32" Diameter Threaded Bushing
Keyway .078-.083 Wide X .037-.043 Deep
Standard Hardware Supplied —
One Hex Nut Assembled And
One Hex Nut Unassembled.

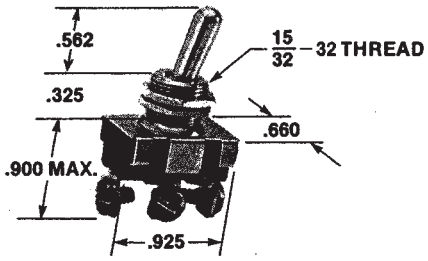

Toggle Switches

RATINGS	CIRCUIT	TOGGLE POSITION			CATALOG NUMBER			
					TYPE OF TERMINATION			
		UP	CENTER	DOWN (keyway)	.187 Q.C.	SCREW	.250 Q.C.	SOLDER LUG
9100 SERIES TOGGLE								
6A-125VAC 3A-250VAC	DPST	ON	NONE	OFF	9103A	9103B	9103C	9103D
	DPDT	ON	NONE	ON	9101A	9101B	9101C	9101D
		ON	OFF	ON	9102A	9102B	9102C	9102D
9000 SERIES TOGGLE								
15A-125VAC 10A-250VAC	DPST	ON	NONE	OFF	9003A	9003B	9003C	9003D
	DPDT	ON	NONE	ON	9001A	9001B	9001C	9001D
		ON	OFF	ON	9002A	9002B	9002C	9002D
9200 SERIES TOGGLE								
20A-125VAC 10A-250VAC ¾ HP, 125-250VAC	DPST	ON	NONE	OFF	9203A	9203B	9203C	9203D
	DPDT	ON	NONE	ON	9201A	9201B	9201C	9201D
		ON	OFF	ON	9202A	9202B	9202C	9202D

For .687 Toggle And .468 Bushing Length Add-100 To Part Number Specified
For Dust And Moisture Resistant Seal Add "S" To Part Number Specified

SPECIFICATIONS

Agency Listings
CSA Certified

Contact Mechanism
Slow-Make/Slow-Break Butt Contact

Contact Material
9100 Series:
Stationary - Copper Alloy/Silver Plated
Movable - Copper Alloy
9000 And 9200 Series:
Stationary (Center) - Copper Alloy/Silver Plated
Stationary (End) - Silver Cadmium Oxide Composite
Movable-Silver Cadmium Oxide Composite

Dielectric Strength
1000 Volts RMS Minimum

Mounting Means
15/32" Diameter Threaded Bushing
Keyway .078-.083 Wide X .037-.043 Deep
Standard Hardware Supplied —
One Hex Nut Assembled And
One Hex Nut Unassembled.

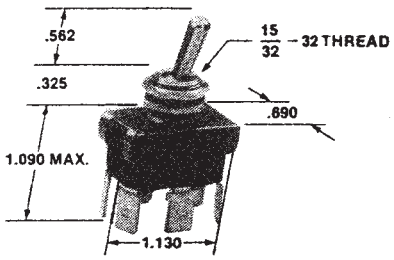

Toggle Switches

RATINGS	CIRCUIT	TOGGLE POSITION			CATALOG NUMBER			
					TYPE OF TERMINATION			
		UP	CENTER	DOWN (keyway)	.187 Q.C.	SCREW	.250 Q.C.	SOLDER LUG

7300 SERIES TOGGLE - SINGLE POLE

20A-125VAC 10A-250VAC 1 HP, 125-250VAC	SPST	ON	NONE	OFF	7305A	7305B	7305C	7305D
		(ON)	NONE	OFF	7335A	7335B	7335C	7335D
		ON	NONE	(OFF)	7345A	7345B	7345C	7345D
	SPDT	ON	NONE	ON	7301A	7301B	7301C	7301D
		ON	OFF	ON	7302A	7302B	7302C	7302D
		(ON)	NONE	ON	7351A	7351B	7351C	7351D
		(ON)	OFF	ON	7352A	7352B	7352C	7352D
		(ON)	OFF	(ON)	7362A	7362B	7362C	7362D

9300 SERIES TOGGLE - DOUBLE POLE

20A-125VAC 10A-250VAC 1 HP, 125-250VAC	DPST	ON	NONE	OFF	9303A	9303B	9303C	9303D
	DPDT	ON	NONE	ON	9301A	9301B	9301C	9301D
		ON	OFF	ON	9302A	9302B	9302C	9302D

For .687 Toggle And .468 Bushing Length Add-100 To Part Number Specified
For Dust And Moisture Resistant Seal Add "S" To Part Number Specified
*Standard Feature On Momentary Switches

( ) Denotes Momentary

SPECIFICATIONS

Agency Listings
CSA Certified

Contact Mechanism
Slow-Make/Slow-Break Butt Contact

Contact Material
Stationary (Center) - Copper Alloy/Silver Plated
Stationary (End) - Silver Cadmium Oxide Composite
Movable-Silver Cadmium Oxide Composite

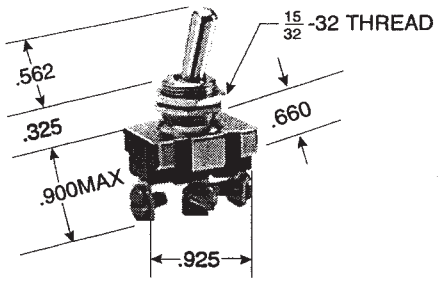

Dielectric Strength
1500 Volts RMS Minimum

Mounting Means
15/32" Diameter Threaded Bushing
Keyway .078-.083 Wide X .037-.043 Deep
Standard Hardware Supplied —
One Hex Nut Assembled And
One Hex Nut Unassembled.

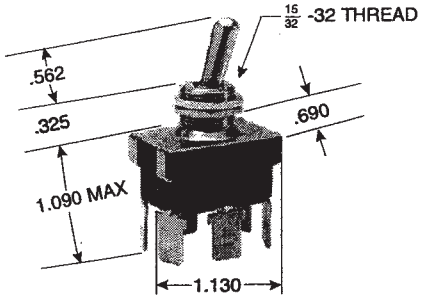

UL FILE NO. E7407
CSA FILE NO. LR8435

Electroswitch Electronic Products • 2010 Yonkers Road • Raleigh, North Carolina
T 888-768-2797 • F 800-909-9171 • www.electro-nc.com

Toggle Switches - D.C. Rated

RATINGS	CIRCUIT	TOGGLE POSITION			CATALOG NUMBER TYPE OF TERMINATION			
		UP	CENTER	DOWN (keyway)	.187 Q.C.	SCREW	.250 Q.C.	SOLDER LUG

7600 SERIES TOGGLE - SINGLE POLE

5A-30V	SPST	ON	NONE	OFF	7605A	7605B	7605C	7605D
		(ON)	NONE	OFF	7635A	7635B	7635C	7635D
		ON	NONE	(OFF)	7645A	7645B	7645C	7645D
	SPDT	ON	NONE	ON	7601A	7601B	7601C	7601D
		ON	OFF	ON	7602A	7602B	7602C	7602D
		(ON)	NONE	ON	7651A	7651B	7651C	7651D
		(ON)	OFF	ON	7652A	7652B	7652C	7652D
		(ON)	OFF	(ON)	7662A	7662B	7662C	7662D

9600 SERIES TOGGLE - DOUBLE POLE

5A-30V	DPST	ON	NONE	OFF	9603A	9603B	9603C	9603D
	DPDT	ON	NONE	ON	9601A	9601B	9601C	9601D
		ON	OFF	ON	9602A	9602B	9602C	9602D

For .687 Toggle And .468 Bushing Length Add-100 To Part Number Specified
For Dust And Moisture Resistant Seal Add "S" To Part Number Specified

SPECIFICATIONS

Contact Mechanism
Slow-Make/Slow-Break Butt Contact

Contact Material
Stationary - Copper Alloy/Silver Plated
Movable - Copper Alloy/ Silver Plated

Mounting Means
15/32" Diameter Threaded Bushing
Keyway .078-.083 Wide X .037-.043 Deep
Standard Hardware Supplied-
One Hex Nut Assembled And
One Hex Nut Unassembled.

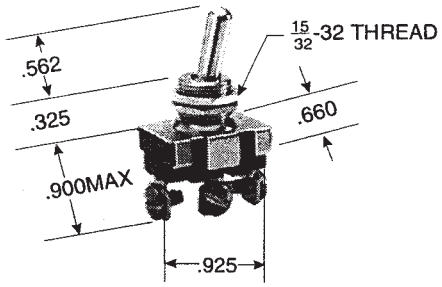

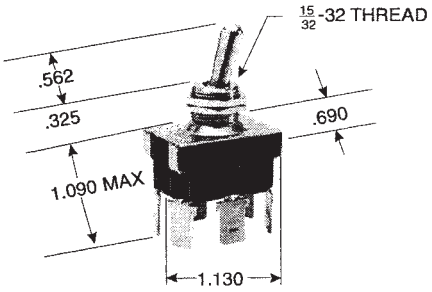

Special Application - SHORTING SWITCH

CATALOG NUMBER TYPE OF TERMINATION			
.187 Q.C.	SCREW	.250 Q.C.	SOLDER LUG
7705A	7705B	7705C	7705D

KEYWAY OPPOSITE TERMINAL

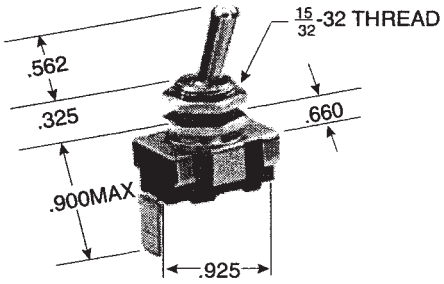

Wire Lead Toggle & Push Button Switches

6600 SERIES TOGGLE

Optional Lead Lengths Available Upon Request

RATINGS	CIRCUIT	ACTION	TOGGLE TYPE	TOGGLE LENGTH	BUSHING LENGTH	CATALOG NUMBER	TYPE OF TERMINATION	ACTUATOR MATERIAL
10A-125VAC 8A-125V 4A-250V ⅓ HP, 125VAC	SPST	OFF-ON	BAT	.562	.325	6600	6" WIRE LEADS 1/2" STRIPPING #18 GAUGE	NICKEL PLATED BRASS
			BAT	.812	.325	6601		
			BAT	.687	.468	6601-100		
			BALL	.375	.325	6602		
			BAT	.562	.325	6603		PLASTIC
12A-125VAC 8A-125V 4A-250V ⅓ HP, 125VAC	SPST	OFF-ON	BAT	.562	.325	6630	6" WIRE LEADS 1/2" STRIPPING #16 GAUGE	NICKEL PLATED BRASS
			BAT	.812	.325	6631		
			BAT	.687	.468	6631-100		
			BALL	.375	.325	6632		
15A-125VAC ½ HP, 125VAC	SPST	OFF-ON	BAT	.562	.325	6606	6" WIRE LEADS 1/2" STRIPPING #16 GAUGE	NICKEL PLATED BRASS
			BAT	.812	.325	6607		
			BAT	.687	.468	6607-100		
			BALL	.375	.325	6608		

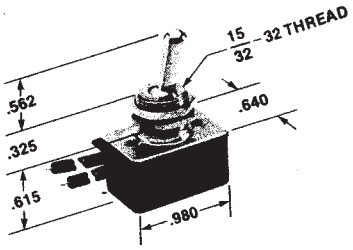

6611 & 6612 SERIES PUSHBUTTON

Optional Lead Lengths Available Upon Request

RATINGS	CIRCUIT	ACTION	ACTUATOR	CATALOG NUMBER	TYPE OF TERMINATION
10A-125VAC 8A-125V 4A-250V ⅓HP-125VAC	SPST	PUSH ON/PUSH OFF	METAL PLUNGER	6611	6" WIRE LEADS 1/2" STRIPPING #18 GAUGE
			METAL LOW PROFILE	6611-LP	
			NYLON PLUNGER	6612	
12A-125VAC 8A-125V 4A-250V ⅓HP-125VAC	SPST	PUSH ON/PUSH OFF	METAL PLUNGER	6641	6" WIRE LEADS 1/2" STRIPPING #16 GAUGE
			METAL LOW PROFILE	6641-LP	
			NYLON PLUNGER	6642	
15A-125VAC ½HP-125VAC	SPST	PUSH ON/PUSH OFF	METAL PLUNGER	6616	6" WIRE LEADS 1/2" STRIPPING #16 GAUGE
			METAL LOW PROFILE	6616-LP	
			NYLON PLUNGER	6617	

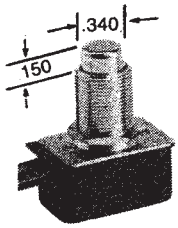

6 SERIES L.P.

SPECIFICATIONS

Agency Listings
UL
CSA Certified

Contact Mechanism
Quick-Make/Quick-Break Wiping Action

Contact Material
6600-6632 Series: Copper Alloy
6611-6642 Series: Copper Alloy
6606-6608 Series:
6616-6617 Series:
Stationary - Copper Alloy With Silver Cadmium Oxide Inlay
Movable - Copper Alloy/Silver Plated

Dielectric Strength
1000 Volts RMS Minimum

Mounting Means
15/32" Diameter Threaded Bushing
Keyway .078-.083 Wide X .037-.043 Deep
Standard Hardware Supplied —
One Hex Nut Assembled And
One Hex Nut Unassembled

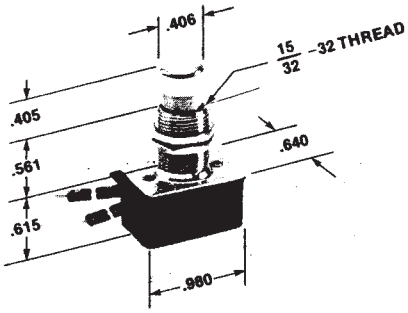

Electroswitch Electronic Products • 2010 Yonkers Road • Raleigh, North Carolina
T 888-768-2797 • F 800-909-9171 • www.electro-nc.com

Push Button Switches

RATINGS	CIRCUIT	ACTION	CATALOG NUMBER / TYPE OF TERMINATION: .187 Q.C.	SCREW	.250 Q.C.	SOLDER LUG

7100 SERIES PUSHBUTTON

RATINGS	CIRCUIT	ACTION		.187 Q.C.	SCREW	.250 Q.C.	SOLDER LUG
6A-125VAC 3A-250VAC	SPST	PUSH ON	PUSH OFF	7104A	7104B	7104C	7104D
		OFF	(ON)	7174A	7174B	7174C	7174D
		ON	(OFF)	7184A	7184B	7184C	7184D
	SPDT	PUSH ON	PUSH ON	7103A	7103B	7103C	7103D
		ON	(ON)	7173A	7173B	7173C	7173D

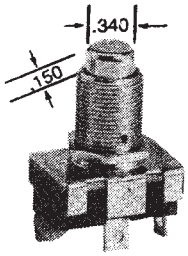

7 SERIES L.P.

7000 SERIES PUSHBUTTON

RATINGS	CIRCUIT	ACTION		.187 Q.C.	SCREW	.250 Q.C.	SOLDER LUG
15A-125VAC 10A-250VAC	SPST	PUSH ON	PUSH OFF	7004A	7004B	7004C	7004D
		OFF	(ON)	7074A	7074B	7074C	7074D
		ON	(OFF)	7084A	7084B	7084C	7084D
	SPDT	PUSH ON	PUSH ON	7003A	7003B	7003C	7003D
		ON	(ON)	7073A	7073B	7073C	7073D

( ) Denotes Momentary

Specify Metal Or Nylon Actuator
To Obtain Metal Low Profile Actuation Add L.P. To P/N.

SPECIFICATIONS

Agency Listings
.ℜ
CSA Certified

Contact Mechanism
Slow-Make/Slow-Break Butt Contact

Contact Material
7100 Series:
Stationary-Copper Alloy/Silver Plated
Movable-Copper Alloy
7000 Series:
Stationary (Center)-Copper Alloy/Silver Plated
Stationary (End)-Silver Cadmium Oxide Composite
Movable-Silver Cadmium Oxide Composite

Dielectric Strength
1000 Volts RMS Minimum

Mounting Means
15/32" Diameter Threaded Bushing
Keyway .080-.083 Wide X .032-.038 Deep
Standard Hardware Supplied —
One Hex Nut Assembled And
One Hex Nut Unassembled

Switch Hardware

#42-06 Hex Nut

#42-04 Knurled Nut

#34-08 Lockwasher

#52-08 ON-OFF Plate

#52-30 HI-LO Plate

#34-13 Locking Ring

CATALOG NUMBER	DESCRIPTION	SPECIFICATIONS	FINISH
42-06	HEX NUT	.562 O.D., .074 THICK	NICKEL
42-04	KNURLED NUT	.605 O.D., .100 THICK	NICKEL
34-08	LOCKWASHER	.600 O.D., .018 THICK	NICKEL
52-08	ON-OFF PLATE	.025 THICK	NICKEL
52-30	HI-LO PLATE	.025 THICK	NICKEL
34-13	LOCKING RING	.718 O.D., .040 THICK	ZINC

All Of The Above Hardware Fits A 15/32-32 Bushing

Table of Contents

Exploded Views and Glossary 2
Ordering Methods 3

C

C Series Selector Guide 4
Enclosed Frame Worksheet 5
C1 Series 6-7
C2/C3 Series 8-9
C4 Series 10-11
C5/C6 Series 12-13
C7 Series 14-15

D

D Series Selector Guide 16-17
D1 Series 18-19
D2 Series 20-21
D3 Series 22-23
D4 Series 24-25
D5 Series 26-27
D6 Series 28-29
D7 Series 30-31
D8 Series 32-33
D9 Series 34-35

E

E Series Selector Guide 36
E1 Series 37
E2 Series 38
E3 Series 39
E4 Series 40-41
E5 Series 42-43

M

M Series Selector Guide 44
Open Frame Worksheet 45
M4 Series 46-47
M5 Series 48-49
M6 Series 50-51
M7 Series 52-53

Assemblies, Index Assemblies 54
Knobs and Dial Plates 55
Figures/Circuit Diagrams 56-59
Panel Cutouts 60
Operating Temperature Range Chart 61
Additional Products & Manufacturers 62
C4/IP67 63
ELECTROSWITCH History 64

EXPLODED VIEWS AND GLOSSARY

EXAMPLE OF OPEN FRAME CONSTRUCTION

(D2 SERIES SHOWN)

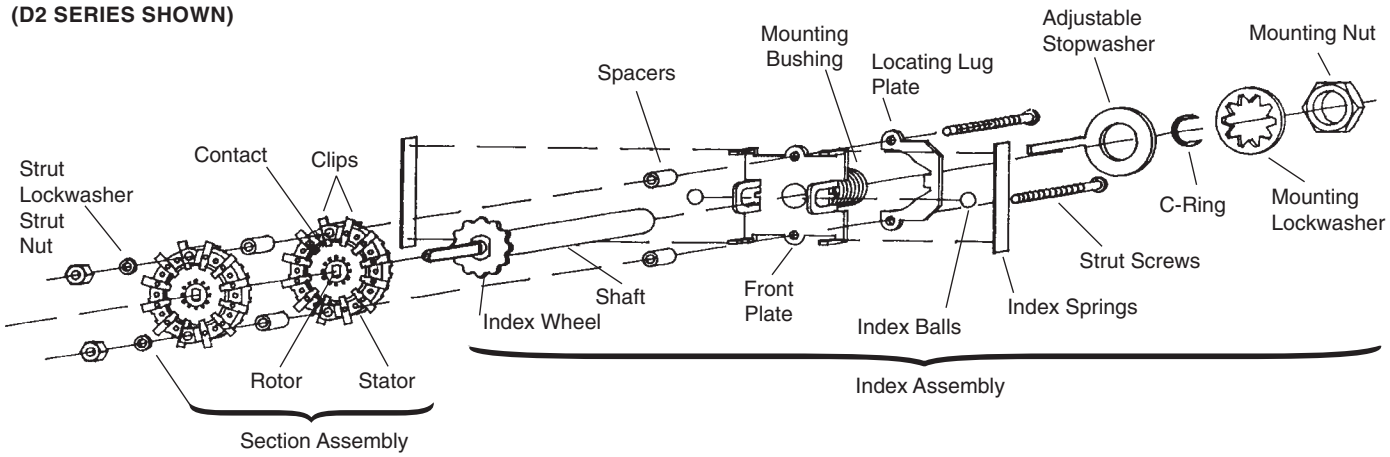

EXAMPLE OF ENCLOSED FRAME CONSTRUCTION

(C4 SERIES SHOWN)

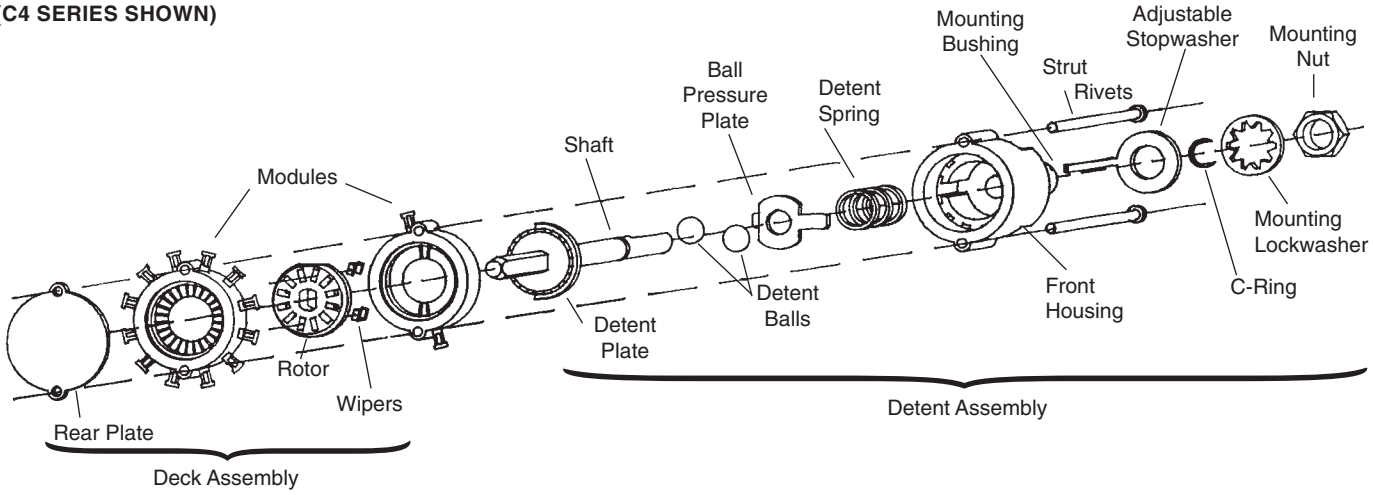

GLOSSARY

Ceramic - Used for stators, an inorganic, non-metallic material processed at high temperatures.
Contact Resistance - The interface resistance between a clip and contact or a wiper and a contact.
Diallyl Phthalate - Used for stators and modules, a thermosetting plastic.
Dielectric Strength - The maximum voltage a section or deck assembly can handle.
Glass Epoxy - Used for stators, a fiberglass material.
Index and Detent Assembly - Performs the mechanical functions of the switch.
Index Angle - The number of degrees between positions.
Insulation Resistance - The resistance of the stator or module between switching components on the stator or module.
Non-Shorting - Also known as break before make.
Pole - An electrically isolated switching circuit. (Common).
Polyester - Used for modules and switch bodies - a thermosetting or thermoplastic resin.
Positions - The mechanical indexing of the electrical circuits. (Throw).
Section and Module Assembly - Performs the electrical functions of the switch.
Shorting - Also known as make before break.
Stop Strength - The maximum rotation force the mechanical stop can facilitate.

ELECTROSWITCH • ELECTRONIC PRODUCTS
UNIT OF ELECTRO SWITCH CORP.
2010 Yonkers Road
Raleigh, NC 27604
Telephone: (888) ROTARYS or (919) 833-0707
Fax: (800) 909-9171 or (919) 833-8016

ORDERING METHODS

Determine the most applicable switch construction (C) enclosed, (D) open frame, (E) special purpose or (M) military, and then use the appropriate selector guide to determine the desired series. There are four ways to select a switch from the catalog.

■ 1. Use the pre-designed standard part numbers printed in the catalog.

Example: D4G0112S

D	4	G	0	1	1	2	S

- S — Contact type
- 12 — Number of positions
- 01 — Poles per switch
- G — Insulation type
- D4 — Series designator

■ 2. Use the "How to Order Additional Options" section located with each series to specify the switch requirements with standard options.

Example: D4G0902S

Specify additional pole and position options not listed in our standard part numbering section

■ 3. Use the "How to Order Additional Options" to add additional options to either a standard part number or a standard option part number.

Example: D4G0902S – R 36 F 01 Z

Options
- Z — Shaft flat angle
- 01 — Shaft & bushing lengths
- F — Fixed stops
- 36 — Index angle
- R — Rear PC Mount

■ 4. Contact the factory or your local representative of Electroswitch. Electroswitch designs and manufactures thousands of custom rotary switches, including "high volume one of a kind" designs. Open and enclosed frame worksheets are provided on pages 5 and 45 to help communicate your requirements.

Example: D4G0902S- Factory Assigned

SELECTOR GUIDE ENCLOSED ROTARY ELECTRONIC SWITCHES

C

	CHARACTERISTICS	SERIES C1	SERIES C2	SERIES C3	SERIES C4	SERIES C5 / C6	SERIES C7
	Page Number	6,7	8,9	8,9	10,11	12,13	14,15
	Construction	ENCLOSED	ENCLOSED	ENCLOSED	ENCLOSED	ENCLOSED	ENCLOSED
	Diameter	.865" wide	.82" wide	1.20" wide	1.50"	.92"	2.032"
	Positions	2 - 12	2 - 8	2 - 12	2 - 12	2 - 12	2 - 24
E	**Current and Voltage**	0.1A @ 125 VAC	0.1A @ 125 VAC	0.1A @ 125 VAC	0.3A @ 125 VAC	1.0A @ 125 VAC	0.5A @ 125 VAC
L		0.25A @ 28 VDC	0.25A @ 28 VDC	0.25A @ 28 VDC	0.5A @ 28 VDC	1.0A @ 28 VDC	1.0A @ 28 VDC
E	**Current Carrying Capacity**	6A	6A	6A	15A	5A	25A
C	**Dielectric Strength**	600 VAC	1,000 VAC	1,000 VAC	1,000 VAC	1,000 VAC	1,000 VAC
T	**Insulation Resistance**	10,000	10,000	10,000	10,000	10,000	10,000
R	**(megohms)**						
I	**Contact Resistance**	5	30	30	3	20	3
C	**(milliohms)**						
A							
L							
M	**Insulation** - Glass Epoxy	NO	NO	NO	YES ★	NO	NO
A	Diallyl Phthalate	STANDARD	NO	NO	STANDARD	NO	STANDARD
T	Ceramic	NO	NO	NO	NO	NO	NO
E	Polyester	NO	STANDARD	STANDARD	NO	STANDARD	NO
R							
I	**Contacts** - Silver Alloy ★	YES	NO	NO	YES	NO	YES
A	Brass/Silver Plate	STANDARD	STANDARD	STANDARD	STANDARD	STANDARD	STANDARD
L							
M	**Stop Strength**	8 in. lb.	8 in. lb.	8 in. lb.	25 in. lb.	4.5 in. lb.	25 in. lb.
E	**Mechanical Life**	25,000 cycles	25,000 cycles	25,000 cycles	25,000 cycles	10,000 cycles	25,000 cycles
C	**Detenting Angles: 15°**	—	—	—	—	—	15
H							
A	**30°**	30	30	30	30	30	30
N	**36°**	—	—	—	36	—	—
I	**45°**	—	—	—	45	—	—
C	**60°**	60	60	60	60	—	60
A	**90°**	90	90	90	90	—	90
L							
O	**Quick Connect**	NO	NO	NO	YES	NO	YES
P	**Rear PC Mount**	YES	NO	NO	YES	YES	NO
T	**Vertical PC Mount ★**	YES	YES	YES	YES	NO	NO
I	**Front PC Mount ★**	NO	NO	NO	YES	NO	NO
O	**Dual Concentric Designs ★**	YES	YES	YES	YES	NO	YES
N	**Keylock ★**	YES	YES	YES	YES	NO	YES
S	**Spring Return ★**	NO	NO	NO	YES	NO	NO
	Water Resistant Seals ★	YES	YES	YES	YES	YES	YES

★ **Contact factory**

ELECTROSWITCH • ELECTRONIC PRODUCTS
UNIT OF ELECTRO SWITCH CORP.
2010 Yonkers Road
Raleigh, NC 27604
Telephone: (888) ROTARYS or (919) 833-0707
Fax: (800) 909-9171 or (919) 833-8016

ENCLOSED FRAME WORKSHEET

SERIES PREFERRED _____

ELECTRICAL REQUIREMENTS:

☐ SHORTING OR ☐ NON-SHORTING

CURRENT CARRYING CAPACITY

INTERRUPTING CURRENT

MAXIMUM WORKING VOLTAGE

ADDITIONAL REQUIREMENTS: _____

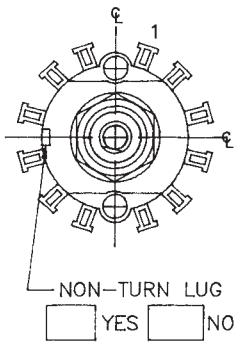

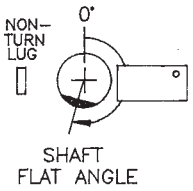

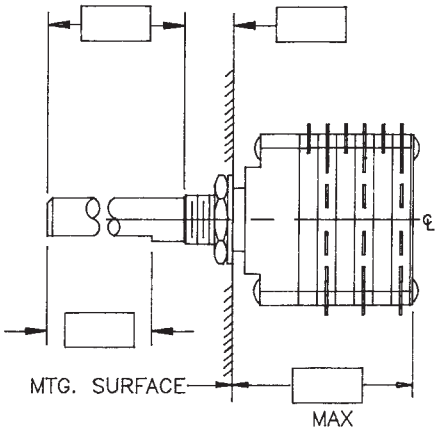

NOTES: SEE APPROPRIATE CATALOG PAGES FOR STANDARD DIMENSIONS AND OPTIONS.

MECHANICAL REQUIREMENTS:

NO. OF POSITIONS

NO. OF POLES

TERMINAL TYPE

INDEX ANGLE

Estimated usage _____

ADDITIONAL REQUIREMENTS:

ELECTROSWITCH
• ELECTRONIC PRODUCTS
UNIT OF ELECTRO SWITCH CORP.

2010 YONKERS ROAD, RALEIGH, NC 27604

FAX TRANSMISSION

FAX Numbers:
(919) 833-8016
(800) 909-9171
FOR ASSISTANCE
PLEASE CALL:
(919) 833-0707
(888) ROTARYS

Sender Information

Date: _____ Time: _____

Name: _____

Company: _____

Address: _____

_____

Ph #: _____

Fax #: _____

C1 - SERIES

SPECIFICATIONS AND ORDERING INFORMATION

0.865" WIDE 0.25 AMP @ 28 VDC

The C1 Series is our smallest enclosed rotary switch, offering index angles of 30°, 60°, and 90°. Standard designs utilize solder lug or vertical PC terminals and diallyl phthalate insulation.

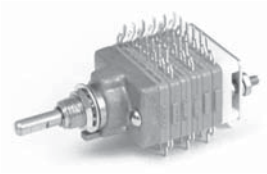

C

SPECIFICATIONS

ELECTRICAL

Current and Voltage Rating: Make and break resistive load 0.25 amp @ 28 VDC; 0.1 amp @ 125 VAC.
Current Carrying Capacity: 6 amps.
Dielectric Strength: 600 VAC between current carrying parts and ground.
Contact Resistance: Average initial 5 milliohms.
Insulation Resistance: In excess of 10,000 megohms.

Hardware: Mounting nut and lockwasher are shipped assembled.

MECHANICAL

Materials and Finishes: All parts utilize non-corrosive materials as standard.
Terminals and Contacts: Brass with silver plate as standard.
Insulation: Diallyl phthalate.
Index: Dual-ball, hill and valley.
Index Life: 25,000 cycles minimum.
Index Torque: Switches have lowest practical torque consistent with crisp detenting and smooth, reliable operation.
Index Angles: 30° standard, 60°, and 90° available.
Index Stops: Fixed standard, adjustable, or continuous available.
Stop Strength: 8 in. lbs. minimum.

STANDARD PART NUMBER

SOLDER LUG - ADJUSTABLE STOPS
SWITCHES - 30° INDEXING - STOPS SET @ 2 POS.

POLES	ACTIVE POSITIONS	POLES/ DECK	NO. OF DECKS	SHORTING	NON-SHORTING	FIG. *
01	02-12	1	1	C1D0112S - A	C1D0112N - A	CA
02	02-12	1	2	C1D0212S - A	C1D0212N - A	CA
02	02-06	2	1	C1D0206S - A	C1D0206N - A	CH
03	02-12	1	3	C1D0312S - A	C1D0312N - A	CA
03	02-04	3	1	C1D0304S - A	C1D0304N - A	CK
04	02-06	2	2	C1D0406S - A	C1D0406N - A	CH
06	02-04	3	2	C1D0604S - A	C1D0604N - A	CK
06	02-06	2	3	C1D0606S - A	C1D0606N - A	CH

VERTICAL P.C. TERMINALS - ADJUSTABLE STOPS
SWITCHES - 30° INDEXING - STOPS SET @ 2 POS.

POLES	ACTIVE POSITIONS	POLES/ DECK	NO. OF DECKS	SHORTING	NON-SHORTING	FIG. *
01	02-06	1	1	C1D0106S - VA	C1D0106N - VA	CB
01	02-12	1	1	C1D0112S - VA	C1D0112N - VA	CC
02	02-06	1	2	C1D0206S - VA	C1D0206N - VA	CB
02	02-12	1	2	C1D0212S - VA	C1D0212N - VA	CC
03	02-06	1	3	C1D0306S - VA	C1D0306N - VA	CB
03	02-12	1	3	C1D0312S - VA	C1D0312N - VA	CC
04	02-06	1	4	C1D0406S - VA	C1D0406N - VA	CB
04	02-12	1	4	C1D0412S - VA	C1D0412N - VA	CC

* FIGURES ARE SHOWN ON PAGE 55.

DIMENSIONS

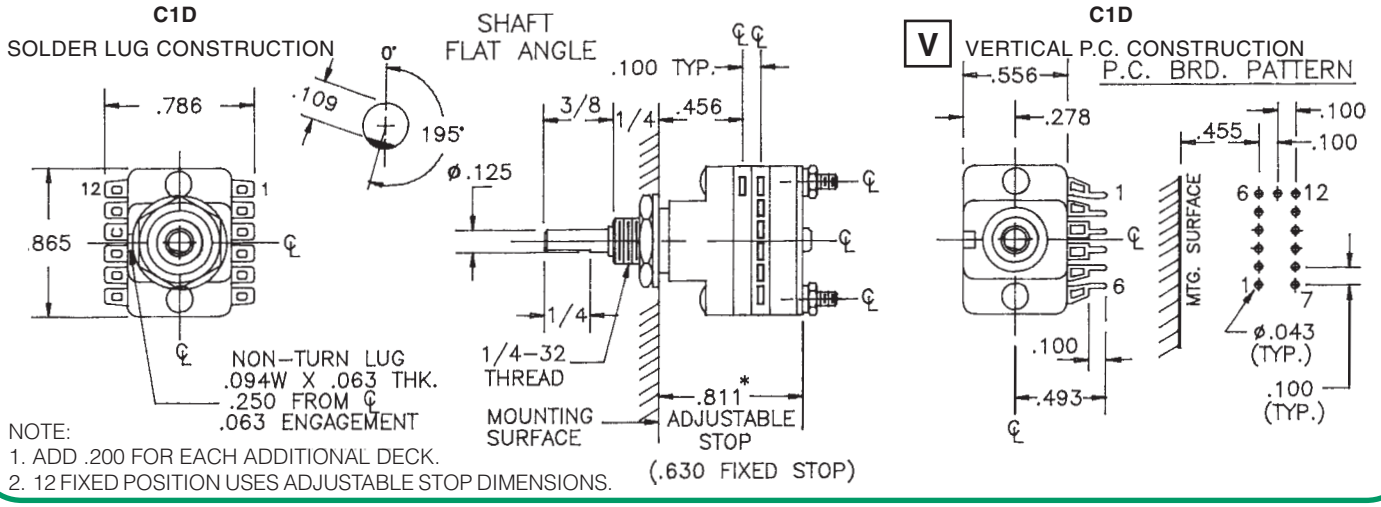

NOTE:
1. ADD .200 FOR EACH ADDITIONAL DECK.
2. 12 FIXED POSITION USES ADJUSTABLE STOP DIMENSIONS.

ELECTROSWITCH • ELECTRONIC PRODUCTS
UNIT OF ELECTRO SWITCH CORP.
2010 Yonkers Road
Raleigh, NC 27604
Telephone: (888) ROTARYS or (919) 833-0707
Fax: (800) 909-9171 or (919) 833-8016

C1 - SERIES

How to Order Additional Options:

2 DIGIT SERIES	INSULATION TYPE	TOTAL POLES	ACTIVE POSITIONS	CONTACT TYPE	TERMINAL TYPE	INDEX ANGLE	STOP TYPE	SHAFT/ BUSHING	SHAFT FLAT
C1	D - DIALLYL	01 - MIN.	12 - MAX @ 30° 06 - MAX @ 60° 04 - MAX @ 90°	N - NON-SHORTING S - SHORTING	L - SOLDER LUG V - VERT. P.C.	30° 60° 90°	F - FIXED C - CONT. A - ADJ.	SEE CHART "A"	SEE CHART "B"
					R - REAR P.C.	30° 60° 90°	F - FIXED C - CONT.		

CUSTOMERS SPECIFIED ORDER NUMBER FOR STANDARD OPTIONS — ADDITIONAL OPTIONS

C	1	D													
			(SPECIFY)		(SPECIFY)		(SPECIFY)		(SPECIFY)		(SPECIFY)		(SPECIFY)		(SPECIFY)

C

ADJUSTABLE STOP MECHANISM

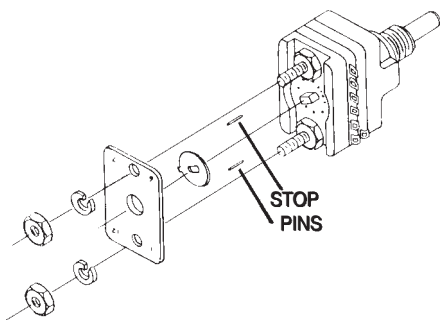

SHAFT, BUSHING, AND FLAT OPTIONS

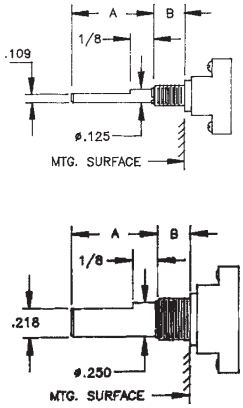

Chart A 1/8" shaft		
P/N OPT	Shaft Lgth	Bush Lgth
01	3/8	1/4
02	3/8	3/8
03	1/2	1/4
04	1/2	3/8
05	9/16	1/4
06	9/16	3/8
07	5/8	1/4
08	5/8	3/8
09	3/4	1/4
10	3/4	3/8
11	7/8	1/4
12	7/8	3/8
13	1	1/4
14	1	3/8
Chart A 1/4" shaft		
P/N OPT	Shaft Lgth	Bush Lgth
15	3/8	1/4
16	3/8	3/8
17	1/2	1/4
18	1/2	3/8
19	3/4	1/4
20	3/4	3/8
21	1	1/4
22	1	3/8

CHART "B"

P/N OPT.	FLAT ANGLE	
U	15°	
W	165°	
Y	195°	- STD.
Z	345°	

SHAFT AS VIEWED WITH NON-TURN LUG AT 9 O'CLOCK AND SHAFT IN EXTREME CCW POSITION AND STRUT BOLTS ORIENTED VERTICALLY.

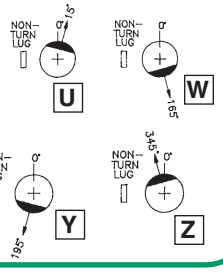

PRINTED CIRCUIT BOARD TERMINAL OPTIONS

R

REAR P.C. FIXED STOP CONSTRUCTION

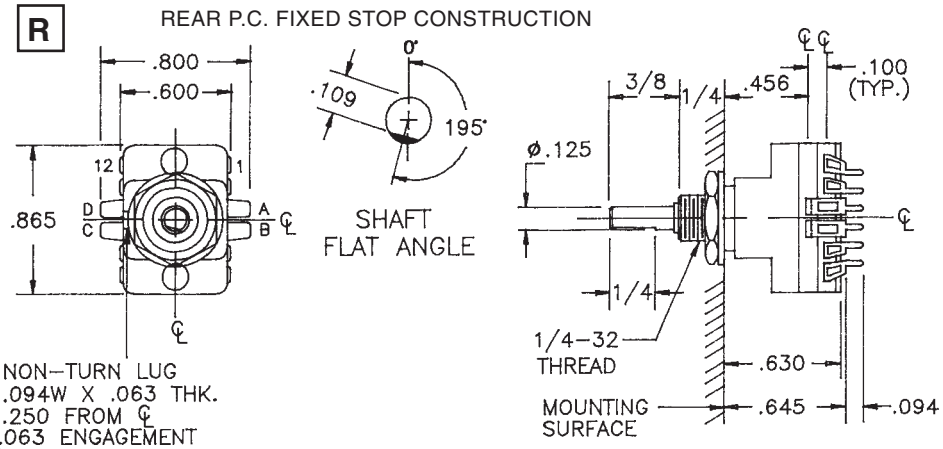

P.C. BRD. PATTERN

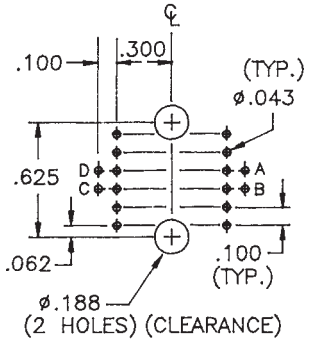

COMMON TERMINALS – A, B, C, D

CUSTOM SWITCHES ARE AVAILABLE. CONTACT THE FACTORY WITH YOUR COMPLETE SPECIFICATIONS.

ELECTROSWITCH • ELECTRONIC PRODUCTS
UNIT OF ELECTRO SWITCH CORP.
2010 Yonkers Road
Raleigh, NC 27604
Telephone: (888) ROTARYS or (919) 833-0707
Fax: (800) 909-9171 or (919) 833-8016

C2/C3 - SERIES

SPECIFICATIONS AND ORDERING INFORMATION

0.82 / 1.2" WIDE 0.25 AMP @ 28 VDC

The C2/C3 Series offers an 8 position and a 12 position vertical P.C. board mountable design. Standard designs utilize a 30° index angle and polyester insulation.

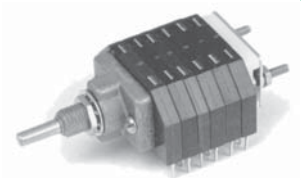

C

SPECIFICATIONS

ELECTRICAL

Current and Voltage Rating: Make and break resistive load 0.25 amp @ 28 VDC; 0.1 amp @ 125 VAC.
Current Carrying Capacity: 6 amps.
Dielectric Strength: 1,000 VAC between current carrying parts and ground.
Contact Resistance: Average initial 30 milliohms.
Insulation Resistance: In excess of 10,000 megohms.

Hardware: Mounting nut and lockwasher are shipped assembled.

MECHANICAL

Materials and Finishes: All parts utilize non-corrosive materials as standard.
Terminals and Contacts: Brass with silver plate as standard.
Insulation: Polyester.
Index: Dual-ball, hill and valley.
Index Life: 25,000 cycles minimum.
Index Torque: Switches have lowest practical torque consistent with crisp detenting and smooth, reliable operation.
Index Angles: Positive 30° standard, 60°, and 90° available.
Index Stops: Fixed standard, adjustable, or continuous available.
Stop Strength: 8 in. lbs. minimum.

STANDARD PART NUMBER

C2 - 8 PIN CONSTRUCTION SWITCHES - 30° INDEXING
ADJUSTABLE STOPS SET @ 2 POS. - P.C. TERMINALS

POLES	ACTIVE POSITIONS	POLES/ DECK	NO. OF DECKS	SHORTING	NON-SHORTING	FIG. *
01	02-08	1	1	C2P0108S - A	C2P0108N - A	CD
02	02-08	1	2	C2P0208S - A	C2P0208N - A	CD
02	02-04	2	1	C2P0204S - A	C2P0204N - A	CI
03	02-08	1	3	C2P0308S - A	C2P0308N - A	CD
04	02-04	2	2	C2P0404S - A	C2P0404N - A	CI
04	02-08	1	4	C2P0408S - A	C2P0408N - A	CD
05	02-08	1	5	C2P0508S - A	C2P0508N - A	CD
06	02-04	2	3	C2P0604S - A	C2P0604N - A	CI

C3 - 12 PIN CONSTRUCTION SWITCHES - 30° INDEXING
ADJUSTABLE STOPS SET @ 2 POS. - P.C. TERMINALS

POLES	ACTIVE POSITIONS	POLES/ DECK	NO. OF DECKS	SHORTING	NON-SHORTING	FIG. *
01	02-12	1	1	C3P0112S - A	C3P0112N - A	CA
02	02-12	1	2	C3P0212S - A	C3P0212N - A	CA
02	02-06	2	1	C3P0206S - A	C3P0206N - A	CH
03	02-04	3	1	C3P0304S - A	C3P0304N - A	CK
03	02-12	1	3	C3P0312S - A	C3P0312N - A	CA
04	02-06	2	2	C3P0406S - A	C3P0406N - A	CH
04	02-12	1	4	C3P0412S - A	C3P0412N - A	CA
06	02-04	3	2	C3P0604S - A	C3P0604N - A	CK

* FIGURES ARE SHOWN ON PAGE 55.

C2 - DIMENSIONS - 8 PIN DESIGN

C2P - STANDARD 8–PIN PER DECK ARRANGEMENT

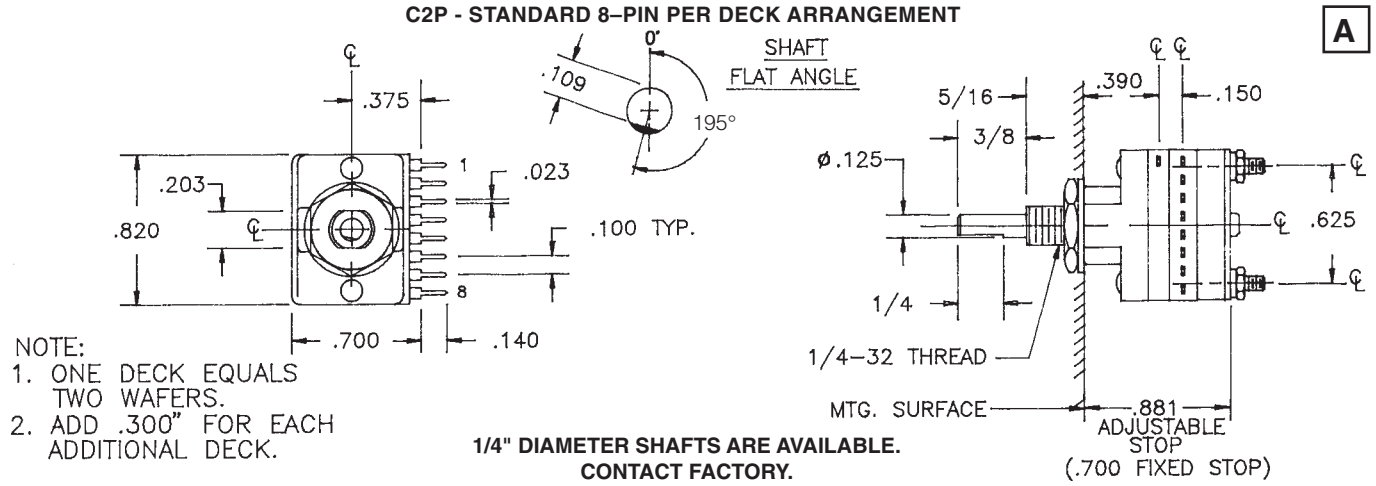

1/4" DIAMETER SHAFTS ARE AVAILABLE. CONTACT FACTORY.

ELECTROSWITCH • ELECTRONIC PRODUCTS
UNIT OF ELECTRO SWITCH CORP.
2010 Yonkers Road
Raleigh, NC 27604
Telephone: (888) ROTARYS or (919) 833-0707
Fax: (800) 909-9171 or (919) 833-8016

ADDITIONAL OPTIONS AND ORDERING INFORMATION

C2/C3 - SERIES

How to Order Additional Options:

2 DIGIT SERIES	INSULATION TYPE	TOTAL POLES	ACTIVE POSITIONS	CONTACT TYPE	TERMINAL TYPE	INDEX ANGLE	STOP TYPE	SHAFT/ BUSHING	SHAFT FLAT
C2	P-POLYESTER	01 - MIN.	08 - MAX @ 30° 04 - MAX @ 60° 03 - MAX @ 90°	N - NON SHORTING S - SHORTING		30° 60° 90°	F - FIXED C - CONT. A - ADJ.	SEE CHART "A"	SEE CHART "B"
C3	P-POLYESTER	01 - MIN.	12 - MAX @ 30° 06 - MAX @ 60° 04 - MAX @ 90°	N - NON SHORTING S - SHORTING					

CUSTOMERS SPECIFIED ORDER NUMBER FOR STANDARD OPTIONS

[ ][ ] **P** [ ][ ] [ ][ ] [ ] ▬ [ ][ ] [ ] [ ][ ] [ ]

(SPECIFY) (SPECIFY) (SPECIFY) (SPECIFY) (SPECIFY) (SPECIFY) (SPECIFY)

ADDITIONAL OPTIONS

C

PRINTED CIRCUIT BOARD PATTERN

C2 8–PIN DECK

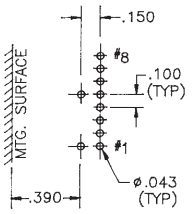

C3 12–PIN DECK

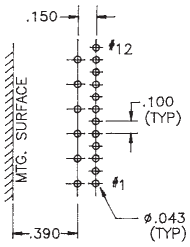

NOTES:
1. The **standard** spacing for the 1/8" dia. shaft from the first row of terminals to the mounting surface is .390 in.
2. The **standard** spacing for the 1/4" dia. shaft from the first row of terminals to the mounting surface is .481 in.

SHAFT AND FLAT OPTIONS

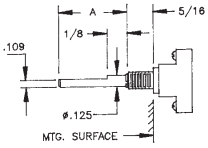

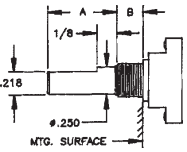

Chart A 1/8" shaft		
P/N OPT	Shaft Lgth	
01	1/4	
02	3/8	Std.
03	1/2	
04	9/16	
05	3/4	
06	7/8	
07	1	
Chart A 1/4" shaft		
P/N OPT	Shaft Lgth	
08	1/4	
09	3/8	
10	1/2	
11	9/16	
12	3/4	
13	7/8	
14	1	

CHART "B"

P/N OPT.	FLAT ANGLE	
U	15°	
W	165°	
Y	195°	- STD.
Z	345°	

SHAFT AS VIEWED WITH NON-TURN LUG AT 9 O'CLOCK AND SHAFT IN EXTREME CCW POSITION AND STRUT BOLTS ORIENTED VERTICALLY.

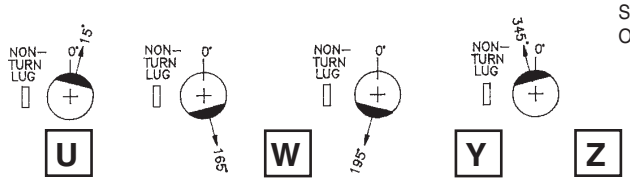

C3 - DIMENSIONS - 12 PIN DESIGN

C3P - STANDARD 12–PIN PER DECK ARRANGEMENT

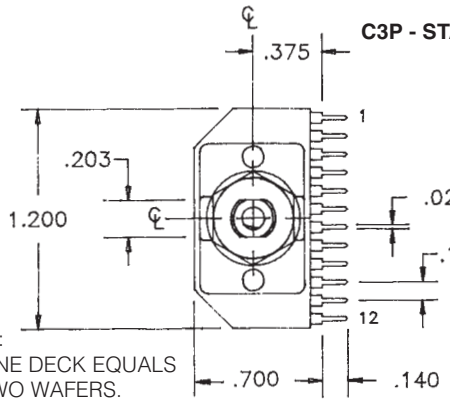

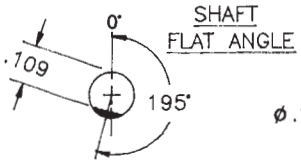

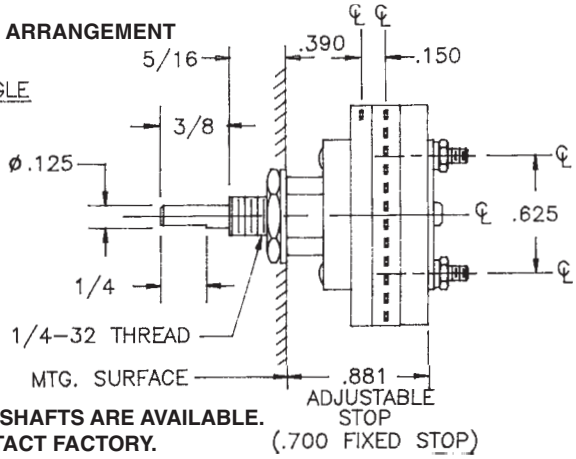

NOTE:
1. ONE DECK EQUALS TWO WAFERS.
2. ADD .300" FOR EACH ADDITIONAL DECK.
3. 12 FIXED POSITION USES ADJUSTABLE STOP DIMENSIONS.

1/4" DIAMETER SHAFTS ARE AVAILABLE. CONTACT FACTORY.

CUSTOM SWITCHES ARE AVAILABLE. CONTACT THE FACTORY WITH YOUR COMPLETE SPECIFICATIONS.

ELECTROSWITCH • ELECTRONIC PRODUCTS
UNIT OF ELECTRO SWITCH CORP.

2010 Yonkers Road
Raleigh, NC 27604
Telephone: (888) ROTARYS or (919) 833-0707
Fax: (800) 909-9171 or (919) 833-8016

C4 - SERIES

SPECIFICATIONS AND ORDERING INFORMATION

1.5" DIAMETER 0.5 AMP @ 28 VDC

The C4 Series provides a versatile, fully enclosed design, that helps keep dirt and moisture out of the contact area while locking in life time lubricants. IP67 Rating Available.

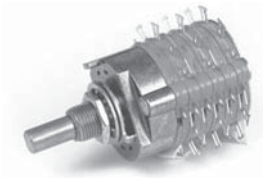

C

SPECIFICATIONS

ELECTRICAL

Current and Voltage Rating: Make and break resistive load 0.5 amp @ 28 VDC; 0.3 amp @ 125 VAC.
Current Carrying Capacity: 15 amps.
Dielectric Strength: 1,000 VAC between current carrying parts and ground.
Contact Resistance: Average initial 3 milliohms.
Insulation Resistance: In excess of 10,000 megohms.

Hardware: Mounting nut and lockwasher are shipped assembled.

MECHANICAL

Materials and Finishes: All parts utilize non-corrosive materials as standard.
Terminals and Contacts: Brass with silver plate as standard.
Insulation: Diallyl phthalate.
Index: Dual-ball, hill and valley.
Index Life: 25,000 cycles minimum.
Index Torque: Switches have lowest practical torque consistent with crisp detenting and smooth, reliable operation.
Index Angles: 30° standard, 36°, 45°, 60°, and 90° available.
Index Stops: Fixed standard, adjustable or continuous available.
Stop Strength: 15 in. lbs. minimum.

STANDARD PART NUMBER

SOLDER LUG - ADJUSTABLE STOPS
SWITCHES - 30° INDEXING - STOPS SET @ 2 POS.

POLES	ACTIVE POSITIONS	POLES/ DECK	NO. OF DECKS	SHORTING	NON-SHORTING	FIG. *
01	02-12	1	1	C4D0112S - A	C4D0112N - A	CA
02	02-06	2	1	C4D0206S - A	C4D0206N - A	CH
02	02-12	1	2	C4D0212S - A	C4D0212N - A	CA
03	02-12	1	3	C4D0312S - A	C4D0312N - A	CA
03	02-04	3	1	C4D0304S - A	C4D0304N - A	CK
04	02-12	1	4	C4D0412S - A	C4D0412N - A	CA
04	02-06	2	2	C4D0406S - A	C4D0406N - A	CH
05	02-12	1	5	C4D0512S - A	C4D0512N - A	CA

POLES	ACTIVE POSITIONS	POLES/ DECK	NO. OF DECKS	SHORTING	NON-SHORTING	FIG. *
06	02-06	2	3	C4D0606S - A	C4D0606N - A	CH
06	02-04	3	2	C4D0604S - A	C4D0604N - A	CK
06	02-12	1	6	C4D0612S - A	C4D0612N - A	CA
08	02-06	2	4	C4D0806S - A	C4D0806N - A	CH
09	02-04	3	3	C4D0904S - A	C4D0904N - A	CK
10	02-06	2	5	C4D1006S - A	C4D1006N - A	CH
12	02-04	3	4	C4D1204S - A	C4D1204N - A	CK
15	02-04	3	5	C4D1504S - A	C4D1504N - A	CK

* FIGURES ARE SHOWN ON PAGE 55.

DIMENSIONS

C4D STANDARD CONSTRUCTION

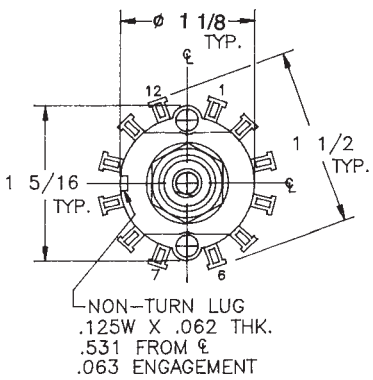

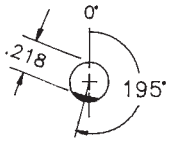

SHAFT
FLAT ANGLE

NOTE:
1. ONE DECK EQUALS TWO WAFERS.
2. ADD .284" FOR EACH ADDITIONAL DECK.

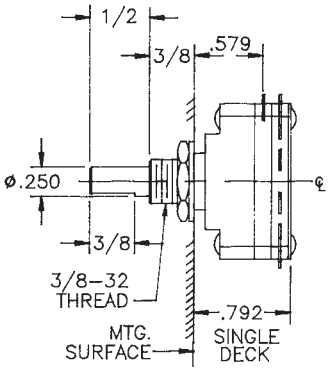

Q

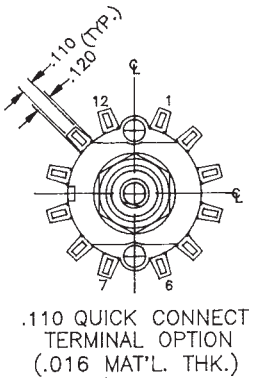

.110 QUICK CONNECT
TERMINAL OPTION
(.016 MAT'L. THK.)

ELECTROSWITCH • ELECTRONIC PRODUCTS
UNIT OF ELECTRO SWITCH CORP.
2010 Yonkers Road
Raleigh, NC 27604
Telephone: (888) ROTARYS or (919) 833-0707
Fax: (800) 909-9171 or (919) 833-8016

C4 - SERIES

How to Order Additional Options:

2 DIGIT SERIES	INSULATION TYPE	TOTAL POLES	ACTIVE POSITIONS	CONTACT TYPE	TERMINAL TYPE	INDEX ANGLE	STOP TYPE	SHAFT/ BUSHING	SHAFT FLAT
C4	D - DIALLYL	01 - MIN.	12 - MAX @ 30° 10 - MAX @ 36° 08 - MAX @ 45° 06 - MAX @ 60° 04 - MAX @ 90°	S - SHORTING N - NON SHORTING	L - SOLDER LUG P - FRONT P.C. (NOT IN 45°) R - REAR P.C. (30° & 36° ONLY) Q - QUICK CONNECT	30° 36° 45° 60° 90°	F - FIXED A - A (30°,60°,90° ONLY) C - CONT.	D SEE CHART "A"	J SEE CHART "B"

CUSTOMERS SPECIFIED ORDER NUMBER FOR STANDARD OPTIONS — ADDITIONAL OPTIONS

C 4 D (SPECIFY) (SPECIFY) (SPECIFY) — (SPECIFY) (SPECIFY) (SPECIFY) (SPECIFY) (SPECIFY)

C

PRINTED CIRCUIT BOARD HOLE PATTERNS

30° INDEX, 1 AND 2 POLE

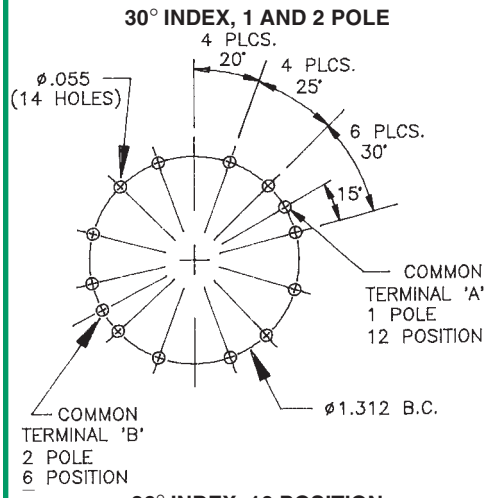

36° INDEX, 10 POSITION

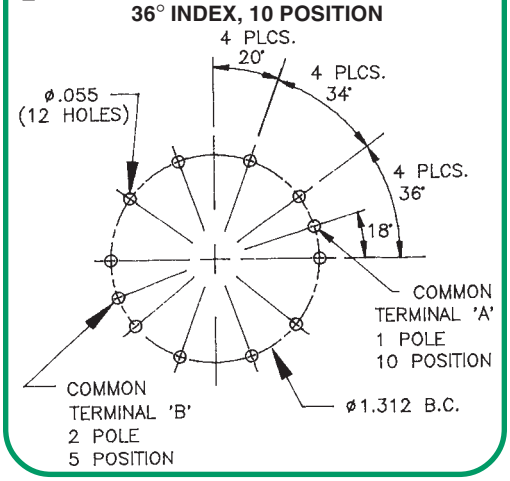

SHAFT, BUSHING, AND FLAT OPTIONS

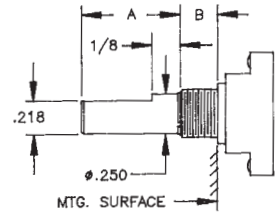

CHART "A"

P/N OPT.	SHAFT LGTH. "A"	BUSH. LGTH. "B"
01	3/8	1/4
02	3/8	3/8
03	1/2	1/4
04	1/2	3/8 - STD.
05	9/16	1/4
06	9/16	3/8
07	5/8	1/4
08	5/8	3/8
09	3/4	1/4
10	3/4	3/8
11	7/8	1/4
12	7/8	3/8
13	1	1/4
14	1	3/8

CHART "B"

P/N OPT.	FLAT ANGLE
U	15°
W	165°
Y	195° - STD.
Z	345°

SHAFT AS VIEWED WITH NON-TURN LUG AT 9 O'CLOCK AND SHAFT IN EXTREME CCW POSITION AND STRUT BOLTS ORIENTED VERTICALLY.

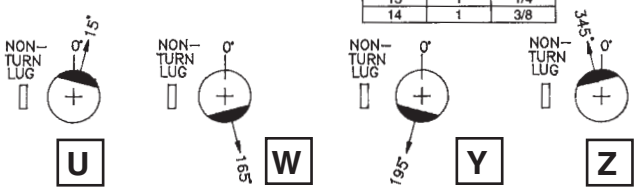

PRINTED CIRCUIT BOARD TERMINAL OPTIONS

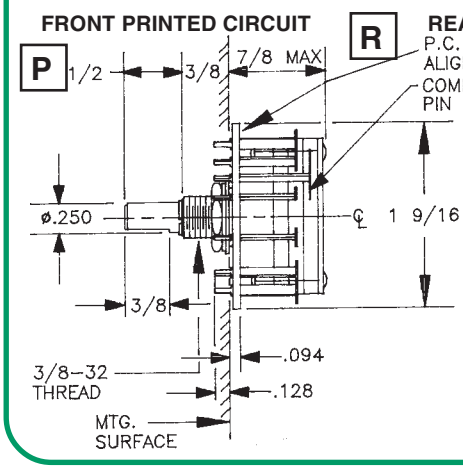

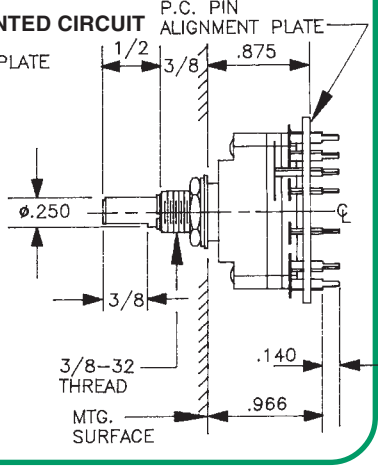

CUSTOM SWITCHES ARE AVAILABLE. CONTACT THE FACTORY WITH YOUR COMPLETE SPECIFICATIONS.

ELECTROSWITCH • ELECTRONIC PRODUCTS
UNIT OF ELECTRO SWITCH CORP.
2010 Yonkers Road
Raleigh, NC 27604
Telephone: (888) ROTARYS or (919) 833-0707
Fax: (800) 909-9171 or (919) 833-8016

C5/C6 - SERIES

SPECIFICATIONS AND ORDERING INFORMATION

0.92" DIAMETER 1.0 AMP @ 28 VDC

The C5 Series offers a very economical and lightweight design. Standard features include 30° indexing up to 12 positions, solder lug terminals, fixed stops, and both internal and external seals for washability.
The C6 Series offers the same features in an unsealed design.

C

SPECIFICATIONS

ELECTRICAL

Current and Voltage Rating: Make and break resistive load 1 amp @ 28 VDC; 1 amp @ 125 VAC.
Current Carrying Capacity: 5 amps.
Dielectric Strength: 1,000 VAC between current carrying parts and ground.
Contact Resistance: Average initial 20 milliohms.
Insulation Resistance: In excess of 10,000 megohms.

Hardware: Mounting nut and lockwasher are shipped assembled.

MECHANICAL

Materials and Finishes: All parts utilize non-corrosive materials as standard.
Terminals and Contacts: Brass with silver plate as standard.
Insulation: Polyester.
Index: Molded live spring detent.
Index Life: 10,000 cycles minimum.
Index Torque: Switches have lowest practical torque consistent with crisp detenting and smooth, reliable operation.
Index Angles: Positive 30° standard.
Index Stops: Fixed standard, adjustable, or continuous available.
Stop Strength: 4.5 in. lbs. minimum.

STANDARD PART NUMBER

C5 - SOLDER LUG TERMINALS
SWITCHES - 30° INDEX - ADJUSTABLE STOPS - SET @ 2 POS. - SEALED

POLES	ACTIVE POSITIONS	POLES/ SECTION	NO. OF SECTIONS	NON-SHORTING	FIG. *
01	02-12	1	1	C5P0112N - A	CE
02	02-06	2	1	C5P0206N - A	CJ
03	02-04	3	1	C5P0304N - A	CL
04	02-03	4	1	C5P0403N - A	CM
C6 - UNSEALED					
01	02-12	1	1	C6P0112N - A	CE
02	02-06	2	1	C6P0206N - A	CJ
03	02-04	3	1	C6P0304N - A	CL
04	02-03	4	1	C6P0403N - A	CM

C5 - P.C. TERMINALS
SWITCHES - 30° INDEX - ADJUSTABLE STOPS - SET @ 2 POS. - SEALED

POLES	ACTIVE POSITIONS	POLES/ SECTION	NO. OF SECTIONS	NON-SHORTING	FIG. *
01	02-12	1	1	C5P0112N - RA	CE
02	02-06	2	1	C5P0206N - RA	CJ
03	02-04	3	1	C5P0304N - RA	CL
04	02-03	4	1	C5P0403N - RA	CM
C6 - UNSEALED					
01	02-12	1	1	C6P0112N - RA	CE
02	02-06	2	1	C6P0206N - RA	CJ
03	02-04	3	1	C6P0304N - RA	CL
04	02-03	4	1	C6P0403N - RA	CM

* FIGURES ARE SHOWN ON PAGE 55.

DIMENSIONS

STANDARD CONSTRUCTION

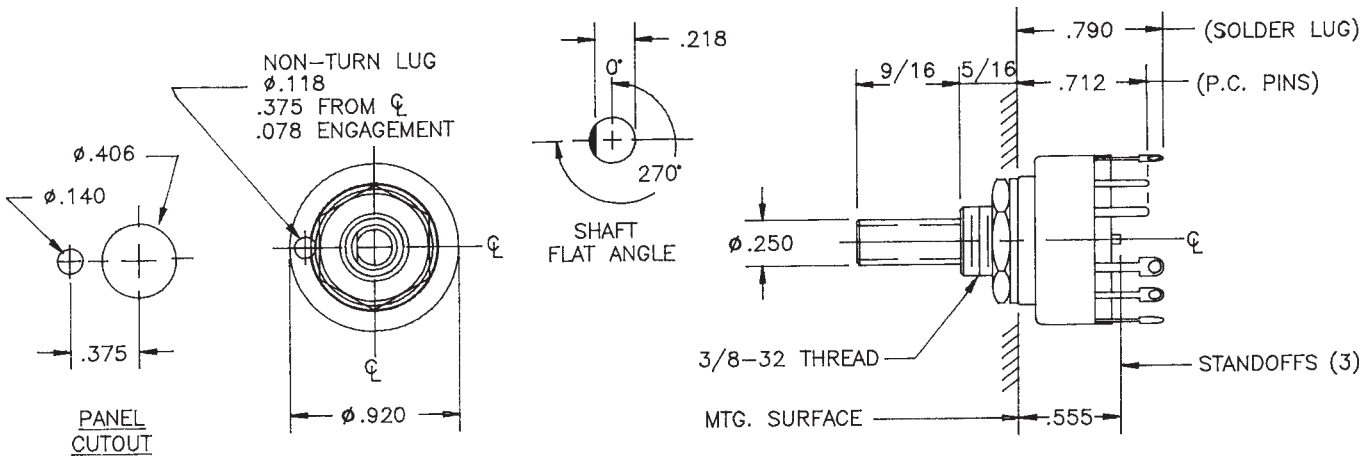

ELECTROSWITCH • ELECTRONIC PRODUCTS
UNIT OF ELECTRO SWITCH CORP.
2010 Yonkers Road
Raleigh, NC 27604
Telephone: (888) ROTARYS or (919) 833-0707
Fax: (800) 909-9171 or (919) 833-8016

ADDITIONAL OPTIONS AND ORDERING INFORMATION

C5/C6 - SERIES

How to Order Additional Options:

2 DIGIT SERIES	INSULATION TYPE	TOTAL POLES	ACTIVE POSITIONS	CONTACT TYPE
C5	P - POLYESTER SEALED	01 02 03 04	12 - MAX 06 - MAX 04 - MAX 03 - MAX	N - NON - SHORTING
C6	P - POLYESTER UNSEALED	01 02 03 04	12 - MAX 06 - MAX 04 - MAX 03 - MAX	N - NON - SHORTING

TERMINAL TYPE	INDEX ANGLE	STOP TYPE	SHAFT/ BUSHING	SHAFT FLAT
L - SOLDER LUG R - REAR P.C.		F - FIXED A - ADJ. C - CONT.	SEE CHART "A"	SEE CHART "B"

CUSTOMERS SPECIFIED ORDER NUMBER FOR STANDARD OPTIONS

[ ][ ] [P] [ ][ ] (SPECIFY) [ ][ ] (SPECIFY) [N] — [ ] (SPECIFY)

ADDITIONAL OPTIONS

[ ] (SPECIFY) [ ][ ] (SPECIFY) [ ] (SPECIFY)

C

TERMINAL TYPES

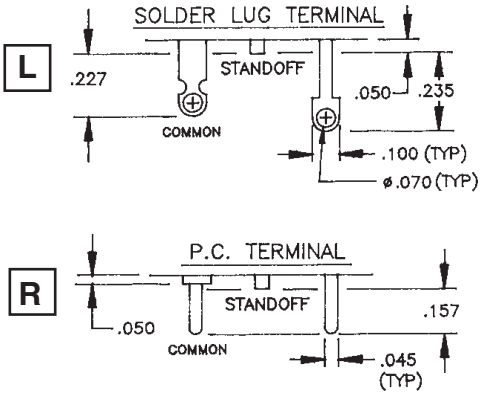

SHAFT AND FLAT OPTIONS

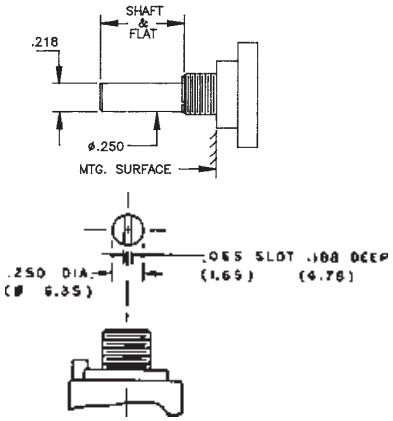

CHART "A"

P/N OPT.	SHAFT & FLAT LGTH.
01	1/4
02	5/16
03	3/8
04	7/16
05	1/2
06	9/16 - STD.
07	5/8
08	11/16
09	3/4
10	13/16
11	7/8
12	15/16
13	1
14	1 1/2
15	SLOTTED

CHART "B"

P/N OPT.	FLAT ANGLE
B	ROUND
Y	270° - STD.

SHAFT AS VIEWED WITH NON-TURN LUG AT 9 O'CLOCK AND SHAFT IN EXTREME CCW POSITION .

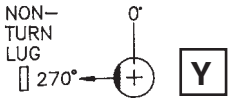

PRINTED CIRCUIT BOARD TERMINAL PATTERNS

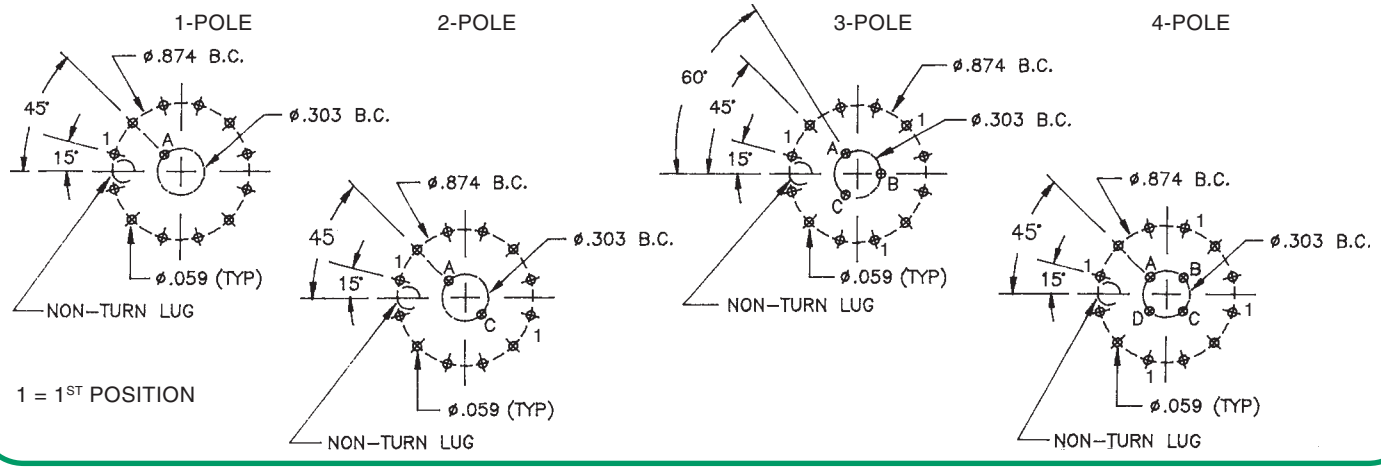

CUSTOM SWITCHES ARE AVAILABLE. CONTACT THE FACTORY WITH YOUR COMPLETE SPECIFICATIONS.

ELECTROSWITCH • ELECTRONIC PRODUCTS
UNIT OF ELECTRO SWITCH CORP.

2010 Yonkers Road
Raleigh, NC 27604
Telephone: (888) ROTARYS or (919) 833-0707
Fax: (800) 909-9171 or (919) 833-8016

C7 - SERIES

SPECIFICATIONS AND ORDERING INFORMATION

2 1/32" DIAMETER 1.0 AMP @ 28 VDC

The C7 Series provides a fully enclosed, modular design that enables switching up to 24 positions. Our standard design offers 15° indexing, and solder lug terminals.

C

SPECIFICATIONS

ELECTRICAL

Current and Voltage Rating: Make and break resistive load 1.0 amp @ 28 VDC; 0.5 amp @ 125 VAC.
Current Carrying Capacity: 25 amps.
Dielectric Strength: 1,000 VAC between current carrying parts and ground.
Contact Resistance: Average initial 3 milliohms.
Insulation Resistance: In excess of 10,000 megohms.

Hardware: Mounting nut and lockwasher are shipped assembled.

MECHANICAL

Materials and Finishes: All parts utilize non-corrosive materials as standard.
Terminals and Contacts: Brass with silver plate as standard.
Insulation: Diallyl phthalate.
Index: Single-ball, hill and valley.
Index Life: 25,000 cycles minimum.
Index Torque: Switches have lowest practical torque consistent with crisp detenting and smooth, reliable operation.
Index Angles: 15° standard, 30°, 60°, and 90° available.
Index Stops: Fixed standard, continuous, or adj. available.
Stop Strength: 25 in. lbs. minimum.

STANDARD PART NUMBER

15° INDEXING - FIXED STOPS
SOLDER LUG TERMINALS

POLES	ACTIVE POSITIONS	POLES/ DECK	NO. OF DECKS	SHORTING	NON-SHORTING	FIG. *
01	23	1	1	C7D0123S	C7D0123N	CF
02	23	1	2	C7D0223S	C7D0223N	CF
03	23	1	3	C7D0323S	C7D0323N	CF
04	23	1	4	C7D0423S	C7D0423N	CF
30° INDEXING						
01	12	1	1	C7D0112S -30	C7D0112N -30	CA
02	12	1	2	C7D0212S -30	C7D0212N -30	CA
03	12	1	3	C7D0312S -30	C7D0312N -30	CA

15° INDEXING - CONTINUOUS ROTATION
SOLDER LUG TERMINALS

POLES	ACTIVE POSITIONS	POLES/ DECK	NO. OF DECKS	SHORTING	NON-SHORTING	FIG. *
01	24	1	1	C7D0124S - C	C7D0124N - C	CG
02	24	1	2	C7D0224S - C	C7D0224N - C	CG
03	24	1	3	C7D0324S - C	C7D0324N - C	CG
04	24	1	4	C7D0424S - C	C7D0424N - C	CG
30° INDEXING						
01	12	1	1	C7D0112S -30C	C7D0112N -30C	CA
02	12	1	2	C7D0212S -30C	C7D0212N -30C	CA
03	12	1	3	C7D0312S -30C	C7D0312N -30C	CA

* FIGURES ARE SHOWN ON PAGE 55.

DIMENSIONS

STANDARD CONSTRUCTION - 15° INDEX ANGLE (3 WAFER DECK)

Q .187 QUICK CONNECT

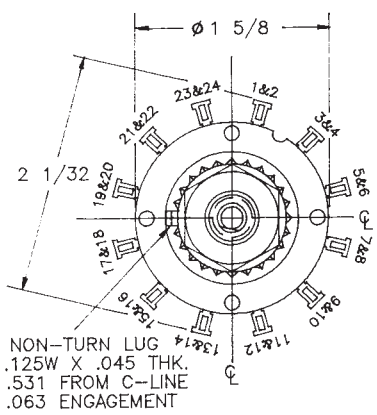

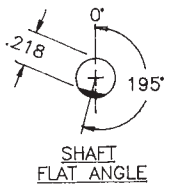

NOTE:
1. ONE DECK EQUALS THREE WAFERS.
2. ADD .468" FOR EACH ADDITIONAL DECK.

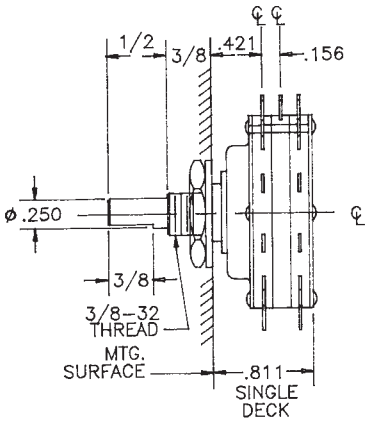

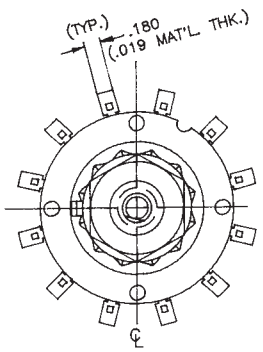

ELECTROSWITCH • ELECTRONIC PRODUCTS
UNIT OF ELECTRO SWITCH CORP.
2010 Yonkers Road
Raleigh, NC 27604
Telephone: (888) ROTARYS or (919) 833-0707
Fax: (800) 909-9171 or (919) 833-8016

C7 - SERIES

How to Order Additional Options:

2 DIGIT SERIES	INSULATION TYPE	TOTAL POLES	ACTIVE POSITIONS	CONTACT TYPE	TERMINAL TYPE	INDEX ANGLE	STOP TYPE	SHAFT/ BUSHING	SHAFT FLAT
C7	D - DIALLYL	01 - MIN.	24 - MAX @ 15°	S - SHORTING N - NON SHORTING	L - SOLDER LUG Q - QUICK CONNECT	15°	F - FIXED 23 - POS. MAX. C - CONT. 24 - POS. MAX. A- Adjustable A23 - POS. MAX.	SEE CHART "A"	SEE CHART "B"
C7	D - DIALLYL	01 - MIN.	12 - MAX @ 30° 06 - MAX @ 60° 04 - MAX @ 90°	S - SHORTING N - NON SHORTING	L - SOLDER LUG30° Q - QUICK CONNECT	60° 90°			

CUSTOMERS SPECIFIED ORDER NUMBER FOR STANDARD OPTIONS — ADDITIONAL OPTIONS

C | 7 | D | (SPECIFY) | (SPECIFY) | (SPECIFY) — (SPECIFY) | (SPECIFY) | (SPECIFY) | (SPECIFY) | (SPECIFY)

SHORTING AND NON-SHORTING SWITCHING IS NOT GUARANTEED ON THE 15° INDEXING C7 SERIES.

SHAFT AND FLAT OPTIONS

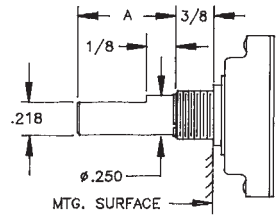

CHART "A"

P/N OPT.	SHAFT LGTH. "A"	
01	1/4	
02	1/2	- STD.
03	9/16	
04	3/4	
05	7/8	
06	1	

CHART "B"

P/N OPT.	FLAT ANGLE	
U	15°	
W	165°	
Y	195°	- STD.
Z	345°	

SHAFT AS VIEWED WITH NON-TURN LUG AT 9 O'CLOCK AND SHAFT IN EXTREME CCW POSITION .

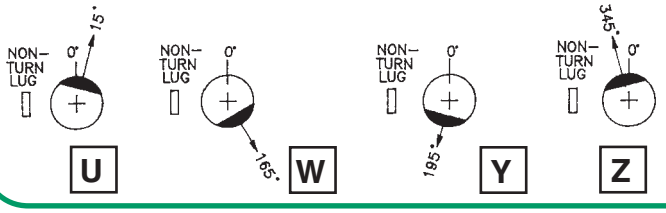

DIMENSIONS

STANDARD CONSTRUCTION - 30° INDEX ANGLE (2 WAFER DECK)

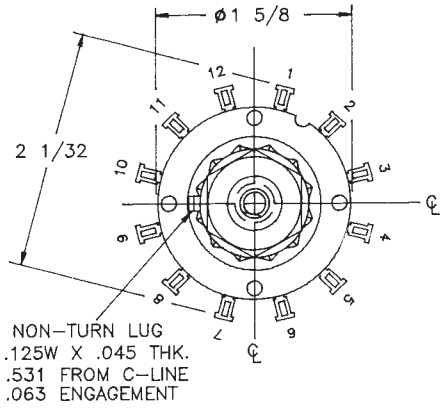

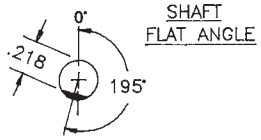

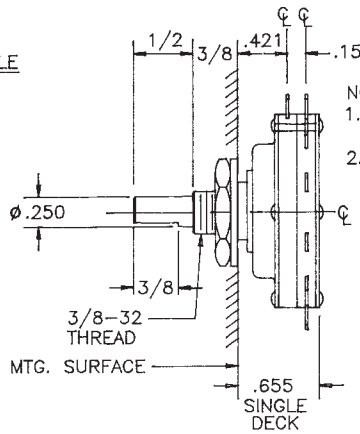

NOTE:
1. ONE DECK EQUALS TWO WAFERS.
2. ADD .312" FOR EACH ADDITIONAL DECK.

CUSTOM SWITCHES ARE AVAILABLE. CONTACT THE FACTORY WITH YOUR COMPLETE SPECIFICATIONS.

ELECTROSWITCH • ELECTRONIC PRODUCTS
UNIT OF ELECTRO SWITCH CORP.
2010 Yonkers Road
Raleigh, NC 27604
Telephone: (888) ROTARYS or (919) 833-0707
Fax: (800) 909-9171 or (919) 833-8016

SELECTOR GUIDE OPEN FRAME ROTARY ELECTRONIC SWITCHES

	CHARACTERISTICS	SERIES D1	SERIES D2	SERIES D3	SERIES D4	SERIES D5	SERIES D6
	Page Number	18,19	20,21	22,23	24,25	26,27	28,29
	Construction	OPEN	OPEN	OPEN	OPEN	OPEN	OPEN
	Diameter	1.00"	1.00"	1.312"	1.437"	1.437"	1.687"
	Positions	2 - 12	2 - 12	2 - 12	2 - 12	2 - 12	2 - 12
E	**Current and Voltage**	0.25A @ 115 VAC	0.25A @ 115 VAC	0.5A @ 115 VAC	0.5A @ 115 VAC	0.5A @ 115 VAC	0.5A @ 115 VAC
L		0.55A @ 28 VDC	0.55A @ 28 VDC	1.5A @ 28 VDC	1.5A @ 28 VDC	1.5A @ 28 VDC	1.5A @ 28 VDC
E	**Current Carrying Capacity**	7A	7A	12A	9A	9A	9A
C	**Dielectric Strength**	750 VAC	750 VAC	1,000 VAC	1,500 VAC	1,500 VAC	1,500 VAC
T	**Insulation Resistance**	750,000	900,000	1,000,000	1,000,000	750,000	900,000
R	**(megohms)**						
I	**Contact Resistance**	5	5	3.5	3.5	3.5	3.5
C	**(milliohms)**						
A							
L							
M	**Insulation** - Glass Epoxy	STANDARD	YES	STANDARD	STANDARD	STANDARD	YES
A	Diallyl Phthalate	YES	STANDARD	YES	YES	NO	STANDARD
T	Ceramic	YES	YES	YES	YES	NO	YES
E							
R							
I	**Contacts** - Silver Alloy ★	YES	YES	STD-CERAMIC	YES	YES	YES
A	Brass/Silver Plate	STANDARD	STANDARD	STD-GLASS	STANDARD	STANDARD	STANDARD
L							
M	**Stop Strength**	10 in. lb.	10 in. lb.	25 in. lb.	10 in. lb.	25 in. lb.	25 in. lb.
E	**Mechanical Life**	25,000 cycles	25,000 cycles	25,000 cycles	25,000 cycles	25,000 cycles	25,000 cycles
C	**Detenting Angles:**						
H							
A	**30°**	30	30	30	30	30	30
N	**36°**	36	36	—	—	—	36
I	**45°**	45	45	—	—	—	45
C	**60°**	—	60	60	60	—	60
A							
L							
O	**Quick Connect**	NO	NO	NO	NO	NO	NO
P	**Rear PC Mount**	YES	YES	YES	YES	YES	YES
T	**Vertical PC Mount ★**	YES	YES	NO	NO	NO	NO
I	**Front PC Mount ★**	YES	YES	YES	YES	YES	YES
O	**Dual Concentric Designs ★**	YES	YES	YES	YES	NO	NO
N	**Keylock ★**	YES	YES	YES	YES	YES	YES
S	**Spring Return ★**	NO	NO	NO	NO	NO	NO
	Water Resistant Seals ★	YES	YES	YES	YES	YES	YES
	Originally Designed To Meet Mil 3786/	SR05	N/A	SR03	SR02	N/A	N/A

D

★ **Contact factory**

ELECTROSWITCH • ELECTRONIC PRODUCTS
UNIT OF ELECTRO SWITCH CORP.
2010 Yonkers Road
Raleigh, NC 27604
Telephone: (888) ROTARYS or (919) 833-0707
Fax: (800) 909-9171 or (919) 833-8016

SELECTOR GUIDE OPEN FRAME ROTARY ELECTRONIC SWITCHES

	CHARACTERISTICS	SERIES D7	SERIES D8	SERIES D9
	Page Number	30,31	32,33	34,35
	Construction	OPEN	OPEN	OPEN
	Diameter	1.875"	2.312"	2.312"
	Positions	2 - 12	2 - 18	2 - 24
E	**Current and Voltage**	1.0A @ 115 VAC	1.0A @ 115 VAC	0.25A @ 115 VAC
L		2.25A @ 28 VDC	2.25A @ 28 VDC	1.5A @ 28 VDC
E	**Current Carrying Capacity**	9A	9A	9A
C	**Dielectric Strength**	1,500 VAC	1,000 VAC	1,000 VAC
T	**Insulation Resistance**	750 ,000	750,000	750 ,000
R	**(megohms)**			
I	**Contact Resistance**	3.5	5	5
C	**(milliohms)**			
A				
L				
M	**Insulation** - Glass Epoxy	STANDARD	STANDARD	STANDARD
A	Diallyl Phthalate	NO	NO	NO
T	Ceramic	YES	NO	NO
E				
R				
I	**Contacts** - Silver Alloy ★	YES	YES	YES
A	Brass/Silver Plate	STANDARD	STANDARD	STANDARD
L				
M	**Stop Strength**	25 in. lb.	25 in. lb.	25 in. lb.
E	**Mechanical Life**	25,000 cycles	25,000 cycles	25,000 cycles
C	**Detenting Angles: 15°**	—	—	15
H	**20°**	—	20	—
A	**22.5°**	—	—	—
N	**30°**	30	—	—
I	**36°**	—	—	—
C	**45°**	—	—	—
A	**60°**	60	—	—
L				
O	**Quick Connect**	NO	NO	NO
P	**Rear PC Mount**	NO	NO	YES
T	**Vertical PC Mount ★**	NO	NO	NO
I	**Front PC Mount ★**	NO	NO	NO
O	**Dual Concentric Designs ★**	YES	YES	YES
N	**Keylock ★**	YES	YES	YES
S	**Spring Return ★**	NO	NO	NO
	Water Resistant Seals ★	YES	YES	YES
	Originally Designed To Meet Mil 3786/	N/A	N/A	N/A

Also see our “E” Series section for specialty open frame switches on pages 37 thru 43.

Use the open frame worksheet on page 45 for custom designs.

D

★ **Contact factory**

ELECTROSWITCH • ELECTRONIC PRODUCTS
UNIT OF ELECTRO SWITCH CORP.
2010 Yonkers Road
Raleigh, NC 27604
Telephone: (888) ROTARYS or (919) 833-0707
Fax: (800) 909-9171 or (919) 833-8016

D1 - SERIES

SPECIFICATIONS AND ORDERING INFORMATION

1" DIAMETER 0.55 AMP @ 28 VDC

This 1" diameter switch offers a unique lateral thrust index with exceptionally crisp torque. The D1 Series was originally designed to meet the size requirements of MIL-S-3786 style SR05. The 30° index and glass epoxy insulation are standard and several options are available including rear printed circuit terminals.

SPECIFICATIONS

ELECTRICAL

Current and Voltage Rating: Make and break resistive load 0.55 amp @ 28 VDC; 0.25 amp @ 115 VAC.
Current Carrying Capacity: 7 amps.
Dielectric Strength: 750 VAC between current carrying parts and ground.
Contact Resistance: Average initial 5 milliohms.
Insulation Resistance: Diallyl in excess of 900,000 megohms.
Glass in excess of 750,000 megohms.
Ceramic in excess of 1,000,000 megohms.
Hardware: Mounting nut and lockwasher are shipped assembled.

MECHANICAL

Materials and Finishes: All parts utilize non-corrosive materials as standard.
Clips and Rotors: Brass with silver plate as standard.
Insulation: Glass, diallyl phthalate, or ceramic.
Index: Dual-ball, side thrust design.
Index Life: 25,000 cycles minimum.
Index Torque: Switches have lowest practical torque consistent with crisp detenting and smooth, reliable operation.
Index Angle: Positive 30° standard, 36°, and 45° available.
Index Stops: Fixed or Continuous available.
Stop Strength: 10 in. lbs. minimum.

D

STANDARD PART NO.

EPOXY GLASS INSULATION
SWITCHES - SOLDER LUG TERMINALS - 30° INDEX

POLES	ACTIVE POSITIONS	POLES/ SECTION	NO. OF SECTIONS	SHORTING	NON-SHORTING	FIG. *
01	02-12	1	1	D1G0112S-F	D1G0112N-F	DE
02	02-12	1	2	D1G0212S-F	D1G0212N-F	DE
02	02-06	2	1	D1G0206S-F	D1G0206N-F	DL
03	02-12	1	3	D1G0312S-F	D1G0312N-F	DE
03	02-05	3	1	D1G0305S-F	D1G0305N-F	DO
04	02-06	2	2	D1G0406S-F	D1G0406N-F	DL
06	02-06	2	3	D1G0606S-F	D1G0606N-F	DL
06	02-05	3	2	D1G0605S-F	D1G0605N-F	DO

CERAMIC INSULATION
SWITCHES - SOLDER LUG TERMINALS - 30° INDEX

POLES	ACTIVE POSITIONS	POLES/ SECTION	NO. OF SECTIONS	SHORTING	NON-SHORTING	FIG. *
01	02-11	1	1	D1C0111S-F	D1C0111N-F	DB
02	02-11	1	2	D1C0211S-F	D1C0211N-F	DB
02	02-05	2	1	D1C0205S-F	D1C0205N-F	DG
03	02-11	1	3	D1C0311S-F	D1C0311N-F	DB
03	02-03	3	1	D1C0303S-F	D1C0303N-F	DN
04	02-05	2	2	D1C0405S-F	D1C0405N-F	DG
06	02-05	2	3	D1C0605S-F	D1C0605N-F	DG
06	02-03	3	2	D1C0603S-F	D1C0603N-F	DN

* FIGURES ARE SHOWN ON PAGES 55 AND 56.

DIMENSIONS

STANDARD CONSTRUCTION

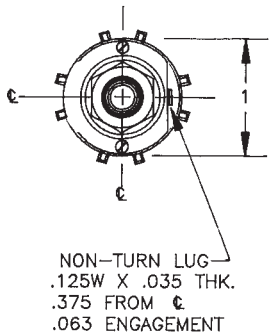

D1G - STANDARD GLASS EPOXY CONSTRUCTION

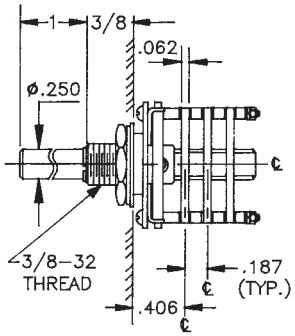

D1C
CERAMIC INSULATION

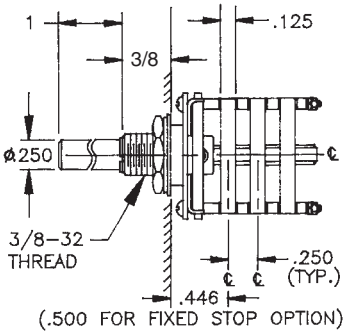

ELECTROSWITCH • ELECTRONIC PRODUCTS
UNIT OF ELECTRO SWITCH CORP.
2010 Yonkers Road
Raleigh, NC 27604
Telephone: (888) ROTARYS or (919) 833-0707
Fax: (800) 909-9171 or (919) 833-8016

D1 - SERIES

How to Order Additional Options:

2 DIGIT SERIES	INSULATION TYPE	TOTAL POLES	ACTIVE POSITIONS	CONTACT TYPE	TERMINAL TYPE	INDEX ANGLE	STOP TYPE	SHAFT/ BUSHING	SHAFT FLAT
D1	G - GLASS (30°,36°,45°) D - DIALLYL (30°,45°)	01 - MIN.	12 - MAX @ 30° 10 - MAX @ 36° 08 - MAX @ 45°	S - SHORTING N - NON-SHORTING	L - SOLDER LUG R - (REAR P.C. NOT CERAMIC)	30° 36° 45°	F - FIXED (7-POS MAX @45°) C - CONT.	SEE CHART "A"	SEE CHART "B"
D1	C - CERAMIC	01 - MIN.	11 - MAX @ 30°	S - SHORTING N - NON-SHORTING	L - SOLDER LUG	30°	F - FIXED C - CONT.		

CUSTOMERS SPECIFIED ORDER NUMBER FOR STANDARD OPTIONS — ADDITIONAL OPTIONS

D	1					—						
			(SPECIFY)	(SPECIFY)	(SPECIFY)		(SPECIFY)	(SPECIFY)	(SPECIFY)	(SPECIFY)	(SPECIFY)	(SPECIFY)

SHAFT, BUSHING, AND FLAT OPTIONS

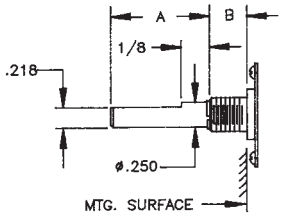

CHART "A"

P/N OPT.	SHAFT LGTH. "A"	BUSH. LGTH. "B"
01	3/8	1/4
02	3/8	3/8
03	1/2	1/4
04	1/2	3/8
05	9/16	1/4
06	9/16	3/8
07	5/8	1/4
08	5/8	3/8
09	3/4	1/4
10	3/4	3/8
11	7/8	1/4
12	7/8	3/8
13	1	1/4
14	1	3/8

D1G - STD.

CHART "B"

P/N OPT.	FLAT ANGLE
B	ROUND - STD.
U	15°
W	165°
Y	195°
Z	345°

SHAFT AS VIEWED WITH NON-TURN LUG AT 9 O'CLOCK AND SHAFT IN EXTREME CCW POSITION AND STRUT BOLTS ORIENTED VERTICALLY.

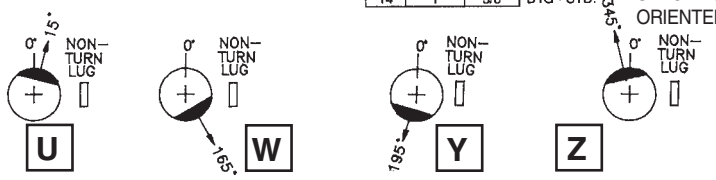

INSULATION AND PRINTED CIRCUIT BOARD TERMINAL OPTIONS

D1D
DIALLYL PHTHALATE INSULATION

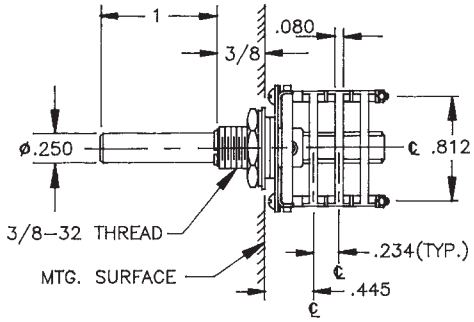

R REAR PRINTED CIRCUIT TERMINALS

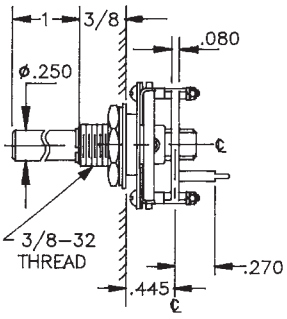

PC BOARD MOUNTING PATTERN

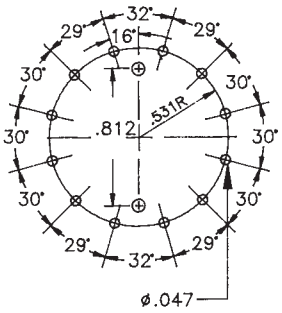

CUSTOM SWITCHES ARE AVAILABLE. CONTACT THE FACTORY WITH YOUR COMPLETE SPECIFICATIONS.

ELECTROSWITCH • ELECTRONIC PRODUCTS
UNIT OF ELECTRO SWITCH CORP.
2010 Yonkers Road
Raleigh, NC 27604
Telephone: (888) ROTARYS or (919) 833-0707
Fax: (800) 909-9171 or (919) 833-8016

D2 - SERIES

SPECIFICATIONS AND ORDERING INFORMATION

1" DIAMETER 0.55 AMP @ 28 VDC

The D2 Series switch is used where space is at a premium. This dual-ball side thrust index offers exceptional torque control and is available in 30°, 36°, 45°, and 60° angles. Standard designs utilize diallyl phthalate or ceramic insulation, solder lug terminals, and 30° adjustable stop indexing.

SPECIFICATIONS

ELECTRICAL

Current and Voltage Rating: Make and break resistive load 0.55 amp @ 28 VDC; 0.25 amp @ 115 VAC.
Current Carrying Capacity: 7 amps.
Dielectric Strength: 750 VAC between current carrying parts and ground.
Contact Resistance: Average initial 5 milliohms.
Insulation Resistance: Diallyl in excess of 900,000 megohms.
Glass in excess of 750,000 megohms.
Ceramic in excess of 1,000,000 megohms.
Hardware: Mounting nut and lockwasher are shipped assembled.

MECHANICAL

Materials and Finishes: All parts utilize non-corrosive materials as standard.
Clips and Rotors: Brass with silver plate as standard.
Insulation: Diallyl phthalate, glass, or ceramic.
Index: Dual-ball, side thrust design.
Index Life: 25,000 cycles minimum.
Index Torque: Switches have lowest practical torque consistent with crisp detenting and smooth, reliable operation.
Index Angles: Positive 30° standard, 36°, 45°, and 60° available.
Index Stops: Adjustable standard, fixed or continuous.
Stop Strength: 10 in. lbs. minimum.

D

STANDARD PART NUMBER

DIALLYL PHTHALATE INSULATION - ADJUSTABLE STOPS
SWITCHES - SOLDER LUG TERMINALS - 30° INDEX - SET @ 2 POS.

POLES	ACTIVE POSITIONS	POLES/ SECTION	NO. OF SECTIONS	SHORTING	NON-SHORTING	FIG. *
01	02-12	1	1	D2D0112S	D2D0112N	DE
02	02-06	2	1	D2D0206S	D2D0206N	DL
02	02-12	1	2	D2D0212S	D2D0212N	DE
03	02-05	3	1	D2D0305S	D2D0305N	DO
03	02-12	1	3	D2D0312S	D2D0312N	DE
04	02-06	2	2	D2D0406S	D2D0406N	DL
06	02-05	3	2	D2D0605S	D2D0605N	DO
06	02-06	2	3	D2D0606S	D2D0606N	DL

CERAMIC INSULATION - ADJUSTABLE STOPS
SWITCHES - SOLDER LUG TERMINALS - 30° INDEX - SET @ 2 POS. - 1/8 DIA. SHAFT

POLES	ACTIVE POSITIONS	POLES/ SECTION	NO. OF SECTIONS	SHORTING	NON-SHORTING	FIG. *
01	02-11	1	1	D2C0111S	D2C0111N	DB
02	02-05	2	1	D2C0205S	D2C0205N	DG
02	02-11	1	2	D2C0211S	D2C0211N	DB
03	02-03	3	1	D2C0303S	D2C0303N	DN
03	02-11	1	3	D2C0311S	D2C0311N	DB
04	02-05	2	2	D2C0405S	D2C0405N	DG
06	02-05	2	3	D2C0605S	D2C0605N	DG
06	02-03	3	2	D2C0603S	D2C0603N	DN

* FIGURES ARE SHOWN ON PAGES 55 AND 56.

DIMENSIONS

STANDARD CONSTRUCTION

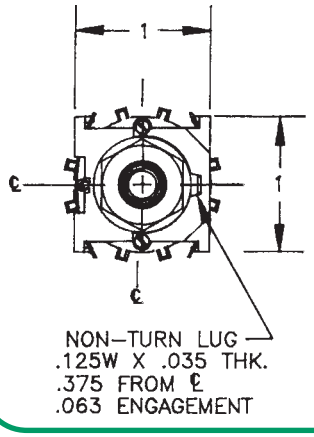

D2D
DIALLYL PHTHALATE INSULATION

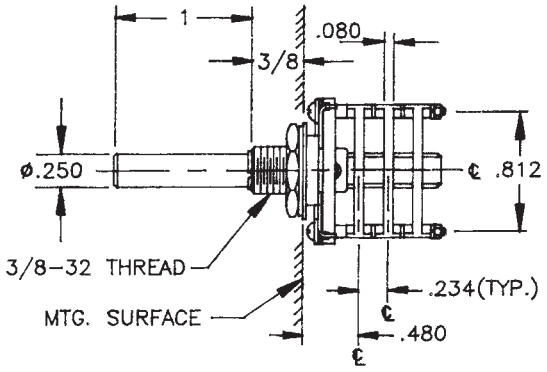

D2C
CERAMIC INSULATION

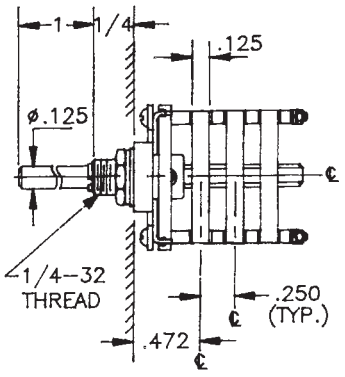

ELECTROSWITCH • ELECTRONIC PRODUCTS
UNIT OF ELECTRO SWITCH CORP.
2010 Yonkers Road
Raleigh, NC 27604
Telephone: (888) ROTARYS or (919) 833-0707
Fax: (800) 909-9171 or (919) 833-8016

D2 - SERIES

How to Order Additional Options:

2 DIGIT SERIES	INSULATION TYPE	TOTAL POLES	ACTIVE POSITIONS	CONTACT TYPE	TERMINAL TYPE	INDEX ANGLE	STOP TYPE	SHAFT/ BUSHING	SHAFT FLAT
D2	D - DIALLYL (30°,45°,60°) G - GLASS (30°,36°,45°,60°)	01 - MIN.	12 - MAX @ 30° 10 - MAX @ 36° 08 - MAX @ 45° 06 - MAX @ 60°	S - SHORTING N - NON SHORTING	L - SOLDER LUG V - VERT. P.C. 30° R - (REAR P.C. NOT CERAMIC)	30° 36° 45° 60°	A - ADJ. F - FIXED C - CONT.	SEE CHART "A"	SEE CHART "B"
D2	C - CERAMIC (30°,60°) 1/8 SHAFT	01 - MIN.	11 - MAX @ 30°	S - SHORTING N - NON SHORTING	L - SOLDER LUG	30° 60°	A - ADJ. F - FIXED C - CONT.		

CUSTOMERS SPECIFIED ORDER NUMBER FOR STANDARD OPTIONS — ADDITIONAL OPTIONS

D 2 [ ] [ ][ ] [ ][ ] [ ] — [ ] [ ][ ] [ ] [ ][ ] [ ]

(SPECIFY) (SPECIFY) (SPECIFY) (SPECIFY) (SPECIFY) (SPECIFY) (SPECIFY) (SPECIFY)

INSULATION OPTION

D2G
GLASS EPOXY INSULATION

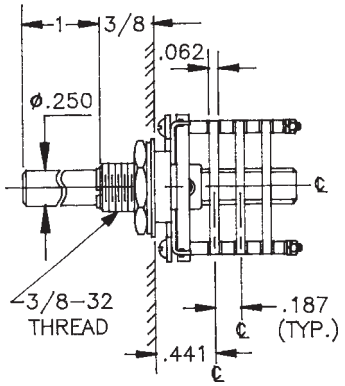

SHAFT, BUSHING, AND FLAT OPTIONS

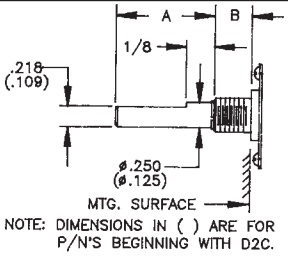

NOTE: DIMENSIONS IN ( ) ARE FOR P/N'S BEGINNING WITH D2C.

CHART "A"

P/N OPT.	SHAFT LGTH. "A"	BUSH. LGTH. "B"	
01	3/8	1/4	
02	3/8	3/8	
03	1/2	1/4	
04	1/2	3/8	
05	9/16	1/4	
06	9/16	3/8	
07	5/8	1/4	
08	5/8	3/8	
09	3/4	1/4	
10	3/4	3/8	
11	7/8	1/4	
12	7/8	3/8	
13	1	1/4	D2C - STD.
14	1	3/8	D2D - STD.

CHART "B"

P/N OPT.	FLAT ANGLE	
B	ROUND	- STD.
U	15°	
W	165°	
Y	195°	
Z	345°	

SHAFT AS VIEWED WITH NON-TURN LUG AT 3 O'CLOCK AND SHAFT IN EXTREME CCW POSITION AND STRUT BOLTS ORIENTED VERTICALLY.

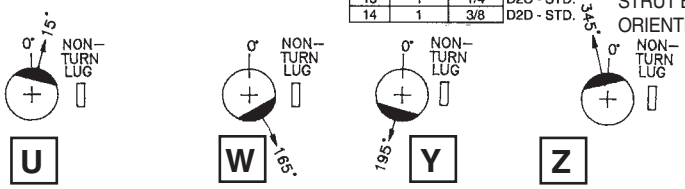

PRINTED CIRCUIT BOARD TERMINAL OPTIONS

R REAR P.C. DIALLYL ONLY

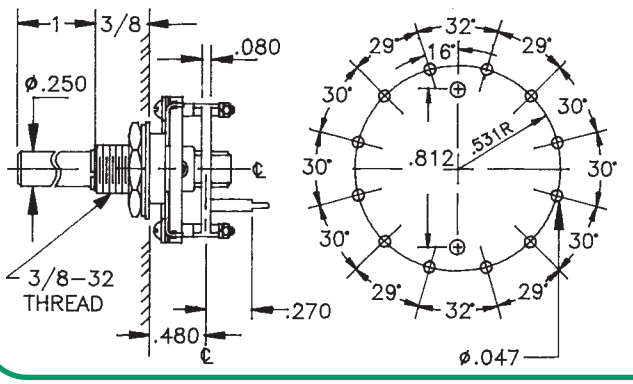

V VERTICALP.C.

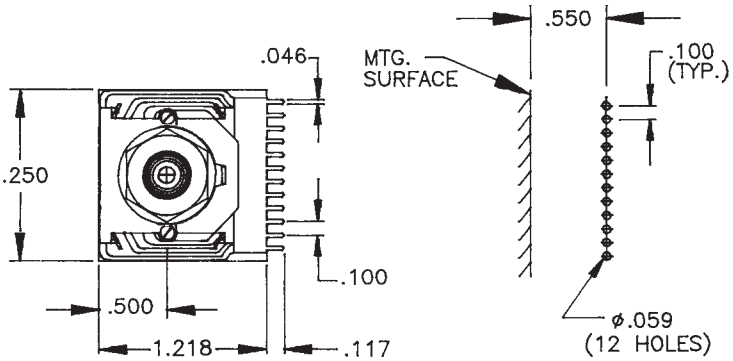

CUSTOM SWITCHES ARE AVAILABLE. CONTACT THE FACTORY WITH YOUR COMPLETE SPECIFICATIONS.

ELECTROSWITCH • ELECTRONIC PRODUCTS
UNIT OF ELECTRO SWITCH CORP.
2010 Yonkers Road
Raleigh, NC 27604
Telephone: (888) ROTARYS or (919) 833-0707
Fax: (800) 909-9171 or (919) 833-8016

D3 - SERIES

SPECIFICATIONS AND ORDERING INFORMATION

1 5/16" DIAMETER 1.5 AMPS @ 28 VDC

The D3 Series was originally designed as a high quality military switch, but is ideal for use in both military and commercial equipment applications. The standard features of this hill and valley design are glass epoxy insulation and a 30° index, with options of ceramic and diallyl insulation and a 60° index.

SPECIFICATIONS

ELECTRICAL

Current and Voltage Rating: Make and break resistive load 1.5 amps @ 28 VDC; 0.5 amp @ 115 VAC.
Current Carrying Capacity: 9 amps.
Dielectric Strength: 1,000 VAC between current carrying parts and ground.
Contact Resistance: Average initial 3.5 milliohms.
Insulation Resistance: Glass in excess of 750,000 megohms.
Ceramic in excess of 1,000,000 megohms.
Diallyl in excess of 900,000 megohms.
Hardware: Mounting nut and lockwasher are shipped assembled.

MECHANICAL

Materials and Finishes: All parts utilize non-corrosive materials.
Clips and Rotors: Silver alloy standard on ceramic.
Brass with silver plate standard on glass.
Insulation: Glass epoxy, ceramic, or diallyl phthalate.
Index: Single-ball, hill and valley.
Index Life: 25,000 cycles minimum.
Index Torque: Switches have lowest practical torque consistent with crisp detenting and smooth, reliable operation.
Index Angles: Positive 30° standard, 60° available.
Index Stops: Adjustable standard, fixed or continuous.
Stop Strength: 25 in. lbs. minimum.

D

STANDARD PART NUMBER

EPOXY GLASS INSULATION - BRASS SILVER PLATE
SWITCHES - SOLDER LUG TERMINALS - 30° INDEX - ADJUSTABLE STOPS SET @ 2 POS.

POLES	ACTIVE POSITIONS	POLES/ SECTION	NO. OF SECTIONS	SHORTING	NON-SHORTING	FIG. *
01	02-11	1	1	D3G0111S	D3G0111N	DA
02	02-11	1	2	D3G0211S	D3G0211N	DA
02	02-05	2	1	D3G0205S	D3G0205N	DH
03	02-11	1	3	D3G0311S	D3G0311N	DA
03	02-03	3	1	D3G0303S	D3G0303N	DM
04	02-05	2	2	D3G0405S	D3G0405N	DH
06	02-03	3	2	D3G0603S	D3G0603N	DM
06	02-05	2	3	D3G0605S	D3G0605N	DH

CERAMIC INSULATION - SILVER ALLOY - 2.6 AMPS @ 28 VDC
SWITCHES - SOLDER LUG TERMINALS - 30° INDEX - ADJUSTABLE STOPS SET @ 2 POS.

POLES	ACTIVE POSITIONS	POLES/ SECTION	NO. OF SECTIONS	SHORTING	NON-SHORTING	FIG. *
01	02-11	1	1	D3C0111S	D3C0111N	DA
02	02-11	1	2	D3C0211S	D3C0211N	DA
02	02-05	2	1	D3C0205S	D3C0205N	DH
03	02-11	1	3	D3C0311S	D3C0311N	DA
03	02-03	3	1	D3C0303S	D3C0303N	DM
04	02-05	2	2	D3C0405S	D3C0405N	DH
06	02-03	3	2	D3C0603S	D3C0603N	DM
06	02-05	2	3	D3C0605S	D3C0605N	DH

* FIGURES ARE SHOWN ON PAGES 55 AND 56.

DIMENSIONS

STANDARD CONSTRUCTION

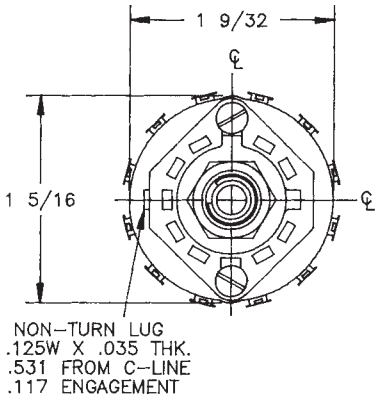

D3G - GLASS EPOXY CONSTRUCTION

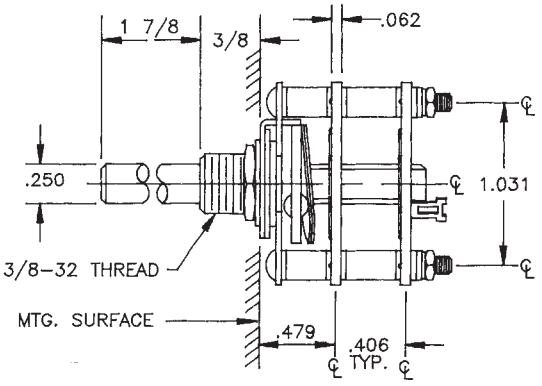

ELECTROSWITCH • ELECTRONIC PRODUCTS
UNIT OF ELECTRO SWITCH CORP.
2010 Yonkers Road
Raleigh, NC 27604
Telephone: (888) ROTARYS or (919) 833-0707
Fax: (800) 909-9171 or (919) 833-8016

D3 - SERIES

How to Order Additional Options:

2 DIGIT SERIES	INSULATION TYPE	TOTAL POLES	ACTIVE POSITIONS	CONTACT TYPE	TERMINAL TYPE	INDEX ANGLE	STOP TYPE	SHAFT/ BUSHING	SHAFT FLAT
D3	G - GLASS C - CERAMIC (SILVER ALLOY) D - DIALLYL	01 - MIN.	12 - MAX @ 30° 06 - MAX @ 60°	N - NON SHORTING S - SHORTING	L - SOLDER LUG R - REAR P.C.	30° 60°	A - ADJ. F - FIXED C - CONT.	SEE CHART "A"	SEE CHART "B"

CUSTOMERS SPECIFIED ORDER NUMBER FOR STANDARD OPTIONS — ADDITIONAL OPTIONS

D	3												
			(SPECIFY)	(SPECIFY)	(SPECIFY)	—	(SPECIFY)	(SPECIFY)	(SPECIFY)	(SPECIFY)	(SPECIFY)	(SPECIFY)

SHAFT, BUSHING, AND FLAT OPTIONS

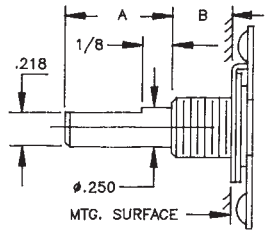

CHART "A"

P/N OPT.	SHAFT LGTH. "A"	BUSH. LGTH. "B"
01	3/8	1/4
02	3/8	3/8
03	1/2	1/4
04	1/2	3/8
05	9/16	1/4
06	9/16	3/8
07	3/4	1/4
08	3/4	3/8
09	1	1/4
10	1	3/8
11	1 1/2	1/4
12	1 1/2	3/8
13	1 7/8	1/4
14	1 7/8	3/8 - STD.

CHART "B"

P/N OPT.	FLAT ANGLE
B	ROUND - STD.
U	15°
W	165°
Y	195°
Z	345°

SHAFT AS VIEWED WITH NON-TURN LUG AT 9 O'CLOCK AND SHAFT IN EXTREME CCW POSITION AND STRUT BOLTS ORIENTED VERTICALLY.

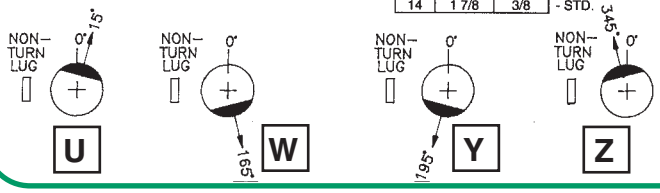

INSULATION AND PRINTED CIRCUIT BOARD TERMINAL OPTIONS

D3C - CERAMIC CONSTRUCTION

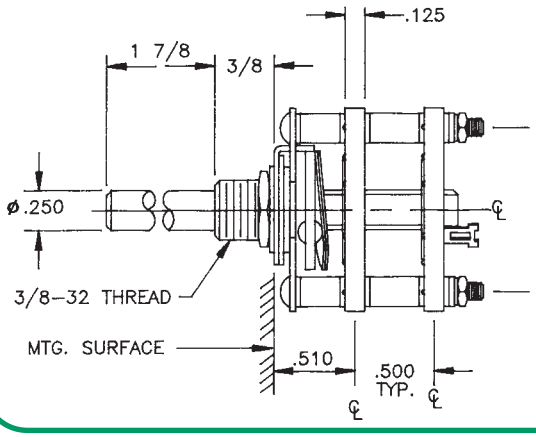

D3D -DIALLYL PHTHALATE CONSTRUCTION

R

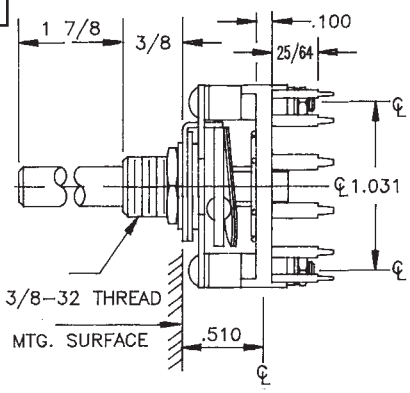

P.C. BOARD MOUNTING PATTERN

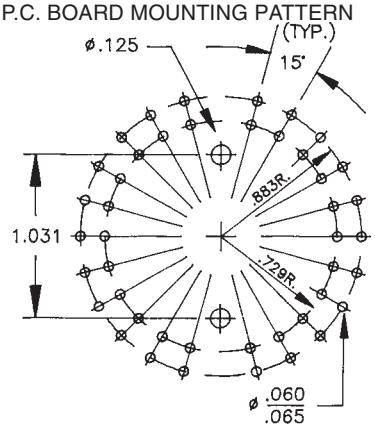

CUSTOM SWITCHES ARE AVAILABLE. CONTACT THE FACTORY WITH YOUR COMPLETE SPECIFICATIONS.

ELECTROSWITCH • ELECTRONIC PRODUCTS
UNIT OF ELECTRO SWITCH CORP.
2010 Yonkers Road
Raleigh, NC 27604
Telephone: (888) ROTARYS or (919) 833-0707
Fax: (800) 909-9171 or (919) 833-8016

D4 - SERIES

SPECIFICATIONS AND ORDERING INFORMATION

1.437" DIAMETER 1.5 AMPS @ 28 VDC

The D4 Series switch is the most economical and versatile switch in our open frame rotary line. This series offers the quality feel of a ball and spring index mechanism and is available with up to 12 positions and 30° or 60° indexing.

SPECIFICATIONS

ELECTRICAL

Current and Voltage Rating: Make and break resistive load 1.5 amps @ 28 VDC; 0.5 amp @ 115 VAC.
Current Carrying Capacity: 9 amps.
Dielectric Strength: 1,500 VAC between current carrying parts and ground.
Contact Resistance: Average initial 3.5 milliohms.
Insulation Resistance: Glass epoxy in excess of 750,000 megohms. Ceramic in excess of 1,000,000 megohms. Diallyl in excess of 900,000 megohms.
Hardware: Mounting nut and lockwasher are shipped assembled.

MECHANICAL

Materials and Finishes: All parts utilize non-corrosive materials as standard.
Clips and Rotors: Brass with silver plate as standard.
Insulation: Glass epoxy, ceramic, or diallyl phthalate.
Index: Single-ball, hill and valley.
Index Life: 25,000 cycles minimum.
Index Torque: Switches have lowest practical torque consistent with crisp detenting and smooth, reliable operation.
Index Angles: Positive 30° standard, 60° available.
Index Stops: Adjustable standard, fixed or continuous.
Stop Strength: 10 in. lbs. minimum.

D

STANDARD PART NUMBER

GLASS EPOXY INSULATION
SWITCHES - SOLDER LUG TERMINALS - 30° INDEX - ADJUSTABLE STOPS

POLES	ACTIVE POSITIONS	POLES/ SECTION	NO. OF SECTIONS	SHORTING	NON-SHORTING	FIG. *
01	02-11	1	1	D4G0111S	D4G0111N	DA
02	02-11	1	2	D4G0211S	D4G0211N	DA
02	02-05	2	1	D4G0205S	D4G0205N	DG
03	02-11	1	3	D4G0311S	D4G0311N	DA
03	02-03	3	1	D4G0303S	D4G0303N	DM
04	02-11	1	4	D4G0411S	D4G0411N	DA
04	02-05	2	2	D4G0405S	D4G0405N	DG
05	02-11	1	5	D4G0511S	D4G0511N	DA
06	02-11	1	6	D4G0611S	D4G0611N	DA
06	02-05	2	3	D4G0605S	D4G0605N	DG
06	02-03	3	2	D4G0603S	D4G0603N	DM
09	02-03	3	3	D4G0903S	D4G0903N	DM

CERAMIC INSULATION
SWITCHES - SOLDER LUG TERMINALS - 30° INDEX - ADJUSTABLE STOPS

POLES	ACTIVE POSITIONS	POLES/ SECTION	NO. OF SECTIONS	SHORTING	NON-SHORTING	FIG. *
01	02-12	1	1	D4C0112S	D4C0112N	DD
02	02-12	1	2	D4C0212S	D4C0212N	DD
02	02-06	2	1	D4C0206S	D4C0206N	DL
03	02-12	1	3	D4C0312S	D4C0312N	DD
03	02-05	3	1	D4C0305S	D4C0305N	DO
04	02-12	1	4	D4C0412S	D4C0412N	DD
04	02-06	2	2	D4C0406S	D4C0406N	DL
05	02-12	1	5	D4C0512S	D4C0512N	DD
05	02-03	5	1	D4C0503S	D4C0503N	DR
06	02-12	1	6	D4C0612S	D4C0612N	DD
06	02-06	2	3	D4C0606S	D4C0606N	DL
06	02-05	3	2	D4C0605S	D4C0605N	DO

* FIGURES ARE SHOWN ON PAGES 55 AND 56.

DIMENSIONS

STANDARD CONSTRUCTION **D4G -** STANDARD GLASS EPOXY CONSTRUCTION

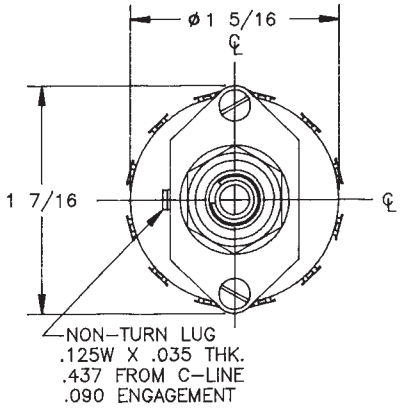

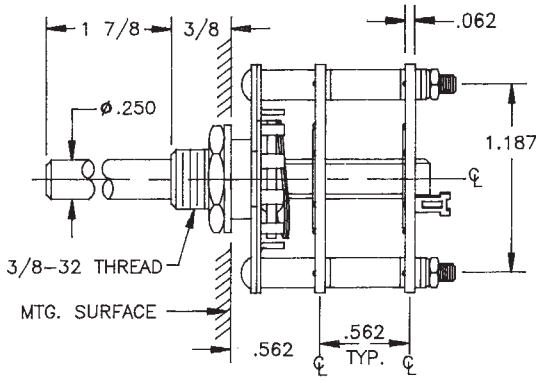

ELECTROSWITCH • ELECTRONIC PRODUCTS
UNIT OF ELECTRO SWITCH CORP.
2010 Yonkers Road
Raleigh, NC 27604
Telephone: (888) ROTARYS or (919) 833-0707
Fax: (800) 909-9171 or (919) 833-8016

D4 - SERIES

How to Order Additional Options:

2 DIGIT SERIES	INSULATION TYPE	TOTAL POLES	ACTIVE POSITIONS	CONTACT TYPE	TERMINAL TYPE	INDEX ANGLE	STOP TYPE	SHAFT/ BUSHING	SHAFT FLAT
D4	G - GLASS C - CERAMIC D - DIALLYL	01 - MIN.	12 - MAX @ 30° 06 - MAX @ 60°	N - NON SHORTING S - SHORTING	L - SOLDER LUG R - REAR P.C.	30° 60°	A - ADJ. F - FIXED C - CONT.	SEE CHART "A"	SEE CHART "B"

CUSTOMERS SPECIFIED ORDER NUMBER FOR STANDARD OPTIONS — ADDITIONAL OPTIONS

D	4													
			(SPECIFY)	(SPECIFY)	(SPECIFY)		(SPECIFY)	(SPECIFY)	(SPECIFY)	(SPECIFY)	(SPECIFY)	(SPECIFY)

ADJUSTABLE STOP MECHANISM

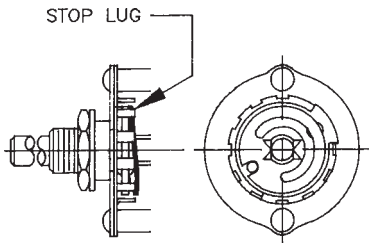

REMOVE STOP LUGS TO ACHIEVE MORE POSITIONS.

SHAFT, BUSHING, AND FLAT OPTIONS

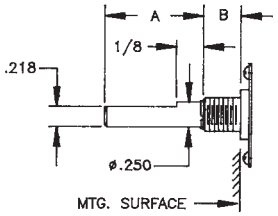

CHART "A"

P/N OPT.	SHAFT LGTH. "A"	BUSH. LGTH. "B"
01	3/8	1/4
02	3/8	3/8
03	1/2	1/4
04	1/2	3/8
05	9/16	1/4
06	9/16	3/8
07	3/4	1/4
08	3/4	3/8
09	1	1/4
10	1	3/8
11	1 1/2	1/4
12	1 1/2	3/8
13	1 7/8	1/4
14	1 7/8	3/8

- STD.

CHART "B"

P/N OPT.	FLAT ANGLE
B	ROUND - STD
U	15°
W	165°
Y	195°
Z	345°

SHAFT AS VIEWED WITH NON-TURN LUG AT 9 O'CLOCK AND SHAFT IN EXTREME CCW POSITION AND STRUT BOLTS ORIENTED VERTICALLY.

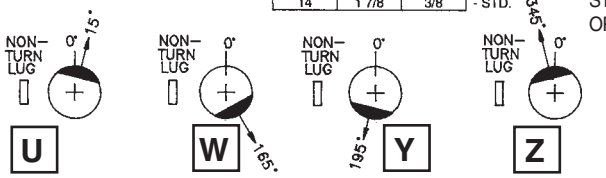

INSULATION AND PRINTED CIRCUIT BOARD TERMINAL OPTIONS

D4C - CERAMIC CONSTRUCTION

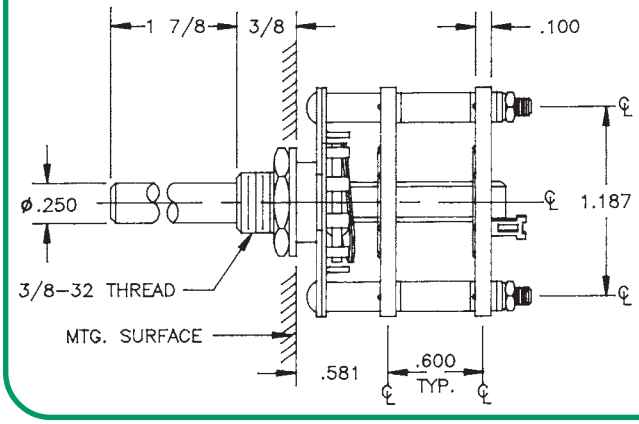

D4D -DIALLYL PHTHALATE CONSTRUCTION

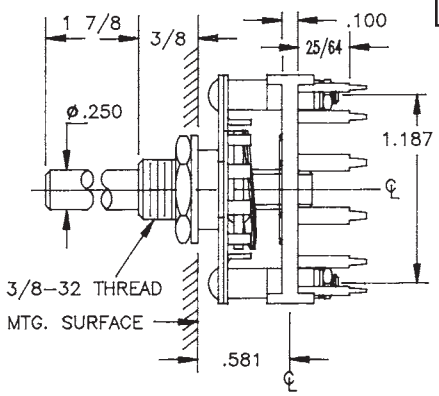

DIALLYL PHTHALATE P.C. BOARD MOUNTING PATTERN

R

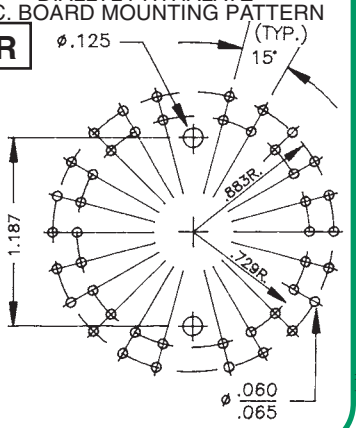

CUSTOM SWITCHES ARE AVAILABLE. CONTACT THE FACTORY WITH YOUR COMPLETE SPECIFICATIONS.

ELECTROSWITCH • ELECTRONIC PRODUCTS
UNIT OF ELECTRO SWITCH CORP.
2010 Yonkers Road
Raleigh, NC 27604
Telephone: (888) ROTARYS or (919) 833-0707
Fax: (800) 909-9171 or (919) 833-8016

D5 - SERIES

SPECIFICATIONS AND ORDERING INFORMATION

1.437" DIAMETER 1.5 AMPS @ 28 VDC

The D5 Series switch is an economical single section switch utilizing glass epoxy insulation, staked construction, and printed circuit board or solder lug terminals. The formed spring index uses a small face plate area with detenting available up to 12 positions.

SPECIFICATIONS

ELECTRICAL

Current and Voltage Rating: Make and break resistive load 1.5 amps @ 28 VDC; 0.5 amp @ 115 VAC.
Current Carrying Capacity: 9 amps.
Dielectric Strength: 1,500 VAC between current carrying parts and ground.
Contact Resistance: Average initial 3.5 milliohms.
Insulation Resistance: In excess of 750,000 megohms.

Hardware: Mounting nut and lockwasher are shipped assembled.

MECHANICAL

Materials and Finishes: All parts utilize non-corrosive materials as standard.
Clips and Rotors: Brass with silver plate as standard.
Insulation: Glass epoxy.
Index: Formed spring, hill and valley design.
Index Life: 25,000 cycles minimum.
Index Torque: Switches have lowest practical torque consistent with crisp detenting and smooth, reliable operation.
Index Angles: Positive 30° standard.
Index Stops: Fixed or continuous.
Stop Strength: 25 in. lbs. minimum.

D

STANDARD PART NUMBER

SOLDER LUG TERMINALS
SWITCHES - 30° INDEXING - FIXED STOPS

POLES	ACTIVE POSITIONS	POLES/ SECTION	NO. OF SECTIONS	SHORTING	NON-SHORTING	FIG. *
01	06	1	1	D5G0106S	D5G0106N	DB
01	08	1	1	D5G0108S	D5G0108N	DB
01	10	1	1	D5G0110S	D5G0110N	DB
01	11	1	1	D5G0111S	D5G0111N	DB
02	04	2	1	D5G0204S	D5G0204N	DG
02	05	2	1	D5G0205S	D5G0205N	DG
03	03	3	1	D5G0303S	D5G0303N	DN

PRINTED CIRCUIT BOARD TERMINALS
SWITCHES - 30° INDEXING - FIXED STOPS

POLES	ACTIVE POSITIONS	POLES/ SECTION	NO. OF SECTIONS	SHORTING	NON-SHORTING	FIG. *
01	06	1	1	D5G0106S - R	D5G0106N - R	DB
01	08	1	1	D5G0108S - R	D5G0108N - R	DB
01	10	1	1	D5G0110S - R	D5G0110N - R	DB
01	11	1	1	D5G0111S - R	D5G0111N - R	DB
02	04	2	1	D5G0204S - R	D5G0204N - R	DG
02	05	2	1	D5G0205S - R	D5G0205N - R	DG
03	03	3	1	D5G0303S - R	D5G0303N - R	DN

* FIGURES ARE SHOWN ON PAGES 55 AND 56.

DIMENSIONS

STANDARD CONSTRUCTION

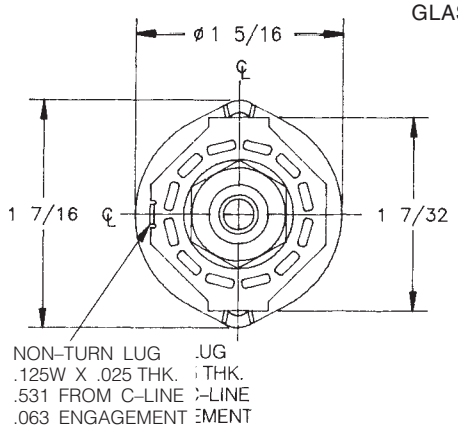

D5G
GLASS EPOXY CONSTRUCTION

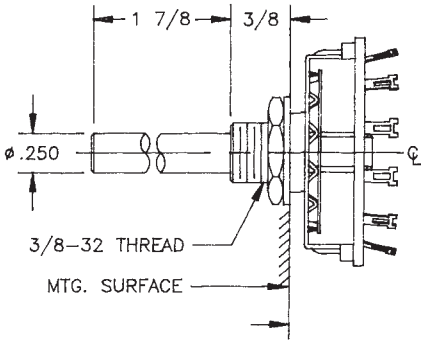

ELECTROSWITCH • ELECTRONIC PRODUCTS
UNIT OF ELECTRO SWITCH CORP.
2010 Yonkers Road
Raleigh, NC 27604
Telephone: (888) ROTARYS or (919) 833-0707
Fax: (800) 909-9171 or (919) 833-8016

D5 - SERIES

How to Order Additional Options:

2 DIGIT SERIES	INSULATION TYPE	TOTAL POLES	ACTIVE POSITIONS	CONTACT TYPE	TERMINAL TYPE	INDEX ANGLE	STOP TYPE	SHAFT/ BUSHING	SHAFT FLAT
D5	G - GLASS	01 - MIN.	12 - MAX @ 30°	S - SHORTING N - NON SHORTING	L - SOLDER LUG R - REAR P.C.		F - FIXED C - CONT.	SEE CHART "A"	SEE CHART "B"

CUSTOMERS SPECIFIED ORDER NUMBER FOR STANDARD OPTIONS

D	5	G												
			(SPECIFY)		(SPECIFY)		(SPECIFY)		(SPECIFY)		(SPECIFY)		(SPECIFY)	

ADDITIONAL OPTIONS

SHAFT, BUSHING, AND FLAT OPTIONS

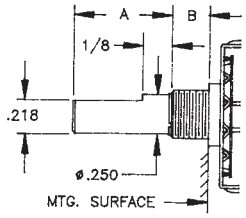

CHART "A"

P/N OPT.	SHAFT LGTH. "A"	BUSH. LGTH. "B"
01	3/8	1/4
02	3/8	3/8
03	1/2	1/4
04	1/2	3/8
05	9/16	1/4
06	9/16	3/8
07	3/4	1/4
08	3/4	3/8
09	1	1/4
10	1	3/8
11	1 1/2	1/4
12	1 1/2	3/8
13	1 7/8	1/4
14	1 7/8	3/8 - STD

CHART "B"

P/N OPT.	FLAT ANGLE
B	ROUND - STD
U	15°
W	165°
Y	195°
Z	345°

SHAFT AS VIEWED WITH NON-TURN LUG AT 9 O'CLOCK AND SHAFT IN EXTREME CCW POSITION AND STRUT BOLTS ORIENTED VERTICALLY.

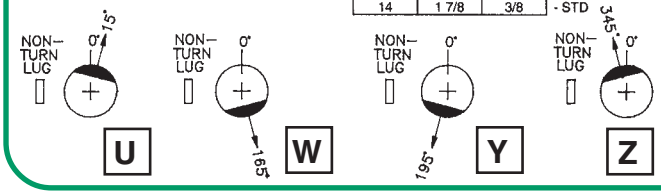

D

PRINTED CIRCUIT BOARD OPTIONS

R

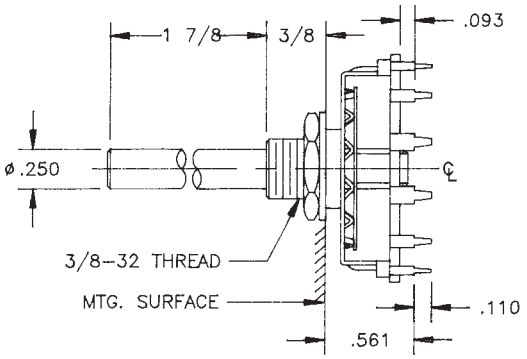

P.C. BOARD MOUNTING PATTERN

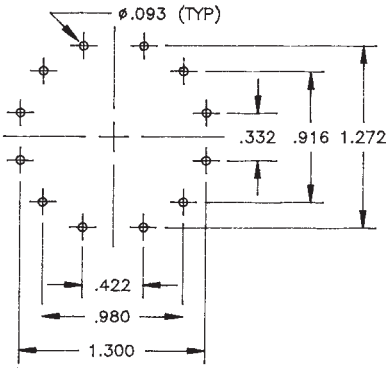

CUSTOM SWITCHES ARE AVAILABLE. CONTACT THE FACTORY WITH YOUR COMPLETE SPECIFICATIONS.

ELECTROSWITCH • ELECTRONIC PRODUCTS
UNIT OF ELECTRO SWITCH CORP.
2010 Yonkers Road
Raleigh, NC 27604
Telephone: (888) ROTARYS or (919) 833-0707
Fax: (800) 909-9171 or (919) 833-8016

D6 - SERIES

SPECIFICATIONS AND ORDERING INFORMATION

1.687" DIAMETER 1.5 AMPS @ 28 VDC

The D6 Series is one of our more versatile rotary switches. A 30° index angle, solder lug terminals, and diallyl phthalate insulation are standard. However, additional indexes of 36°, 45°, and 60° and insulation sections of glass epoxy and ceramic are available. Adjustable stops are available on indexes of 30° and 60°.

SPECIFICATIONS

ELECTRICAL

Current and Voltage Rating: Make and break resistive load 1.5 amps @ 28 VDC; 0.5 amp @ 115 VAC.
Current Carrying Capacity: 9 amps.
Dielectric Strength: 1,500 VAC between current carrying parts and ground.
Contact Resistance: Average initial 3.5 milliohms.
Insulation Resistance: Diallyl in excess of 900,000 megohms
Glass in excess of 750,000 megohms.
Ceramic in excess of 1,000,000 megohms.
Hardware: Mounting nut and lockwasher are shipped assembled.

MECHANICAL

Materials and Finishes: All parts utilize non-corrosive materials as standard.
Clips and Rotors: Brass with silver plate as standard.
Insulation: Diallyl phthalate, glass, or ceramic.
Index: Dual-ball, side thrust design.
Index Life: 25,000 cycles minimum.
Index Torque: Switches have lowest practical torque consistent with crisp detenting and smooth, reliable operation.
Index Angles: Positive 30° standard, 36°, 45°, and 60° available.
Index Stops: Adjustable standard, fixed or continuous.
Stop Strength: 25 in. lbs. minimum.

D

STANDARD PART NUMBER

DIALLYL PHTHALATE INSULATION
SWITCHES - 30° INDEX - ADJUSTABLE STOPS - SOLDER LUG TERMINALS

POLES	ACTIVE POSITIONS	POLES/ SECTION	NO. OF SECTIONS	SHORTING	NON-SHORTING	FIG. *
01	02-12	1	1	D6D0112S	D6D0112N	DD
02	02-12	1	2	D6D0212S	D6D0212N	DD
02	02-06	2	1	D6D0206S	D6D0206N	DL
03	02-12	1	3	D6D0312S	D6D0312N	DD
03	02-05	3	1	D6D0305S	D6D0305N	DO
04	02-12	1	4	D6D0412S	D6D0412N	DD
04	02-06	2	2	D6D0406S	D6D0406N	DL
05	02-12	1	5	D6D0512S	D6D0512N	DD

POLES	ACTIVE POSITIONS	POLES/ SECTION	NO. OF SECTIONS	SHORTING	NON-SHORTING	FIG. *
05	02-03	5	1	D6D0503S	D6D0503N	DR
06	02-12	1	6	D6D0612S	D6D0612N	DD
06	02-06	2	3	D6D0606S	D6D0606N	DL
06	02-05	3	2	D6D0605S	D6D0605N	DO
08	02-06	2	4	D6D0806S	D6D0806N	DL
09	02-05	3	3	D6D0905S	D6D0905N	DO
10	02-03	5	2	D6D1003S	D6D1003N	DR
10	02-06	2	5	D6D1006S	D6D1006N	DL

* FIGURES ARE SHOWN ON PAGES 55 AND 56.

DIMENSIONS

STANDARD CONSTRUCTION

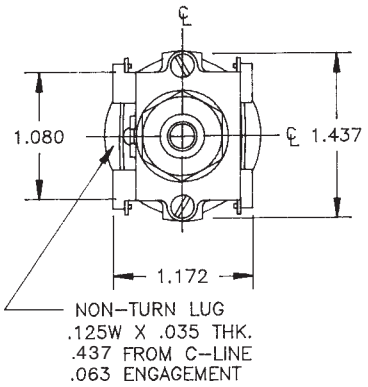

D6D - DIALLYL PHTHALATE CONSTRUCTION

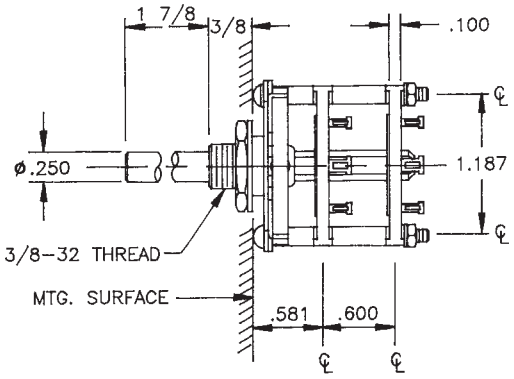

ELECTROSWITCH • ELECTRONIC PRODUCTS
UNIT OF ELECTRO SWITCH CORP.
2010 Yonkers Road
Raleigh, NC 27604
Telephone: (888) ROTARYS or (919) 833-0707
Fax: (800) 909-9171 or (919) 833-8016

D6 - SERIES

How to Order Additional Options:

2 DIGIT SERIES	INSULATION TYPE	TOTAL POLES	ACTIVE POSITIONS	CONTACT TYPE	TERMINAL TYPE	INDEX ANGLE	STOP TYPE	SHAFT/ BUSHING	SHAFT FLAT
D6	D - DIALLYL (30°,45°,60°) G - GLASS (30°,36°,45°,60°)	01 - MIN.	12 - MAX @ 30° 10 - MAX @ 36° 08 - MAX @ 45° 06 - MAX @ 60°	S - SHORTING N - NON SHORTING	L - SOLDER LUG R - REAR P.C. (NO 36°)	30° 36° 45° 60°	A - ADJ. (30°,60° ONLY) F - FIXED C - CONT.	SEE CHART "A"	SEE CHART "B"
D6	C - CERAMIC (30°,60°)	01 - MIN.	12 - MAX @ 30° 06 - MAX @ 60°	S - SHORTING N - NON SHORTING	L - SOLDER LUG	30° 60°	A - ADJ. F - FIXED C - CONT.		

CUSTOMERS SPECIFIED ORDER NUMBER FOR STANDARD OPTIONS — ADDITIONAL OPTIONS

D 6 [ ] [ ][ ] [ ][ ] [ ] — [ ] [ ][ ] [ ] [ ][ ] [ ]

(SPECIFY) (SPECIFY) (SPECIFY) (SPECIFY) (SPECIFY) (SPECIFY) (SPECIFY) (SPECIFY)

PRINTED BOARD MOUNTING PATTERN

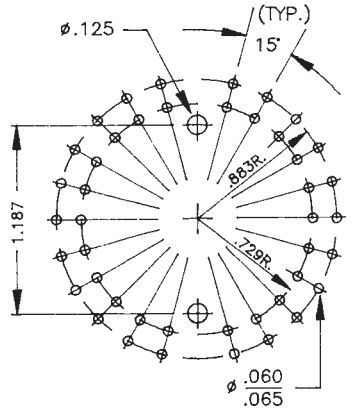

SHAFT, BUSHING, AND FLAT OPTIONS

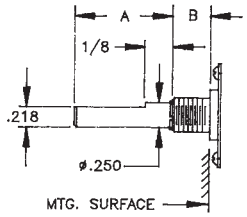

CHART "A"

P/N OPT.	SHAFT LGTH. "A"	BUSH. LGTH. "B"
01	3/8	1/4
02	3/8	3/8
03	1/2	1/4
04	1/2	3/8
05	9/16	1/4
06	9/16	3/8
07	3/4	1/4
08	3/4	3/8
09	1	1/4
10	1	3/8
11	1 1/2	1/4
12	1 1/2	3/8
13	1 7/8	1/4
14	1 7/8	3/8 - STD

CHART "B"

P/N OPT.	FLAT ANGLE
B	ROUND - STD
U	15°
W	165°
Y	195°
Z	345°

SHAFT AS VIEWED WITH NON-TURN LUG AT 9 O'CLOCK AND SHAFT IN EXTREME CCW POSITION AND STRUT BOLTS ORIENTED VERTICALLY.

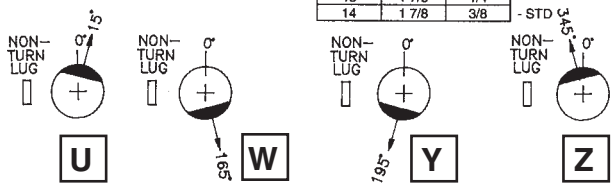

INSULATION OPTIONS

D6G - GLASS EPOXY INSULATION

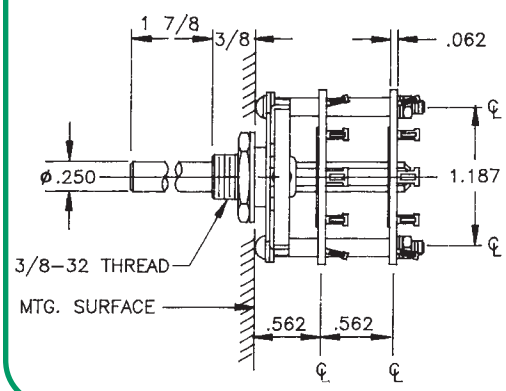

R REAR P.C.

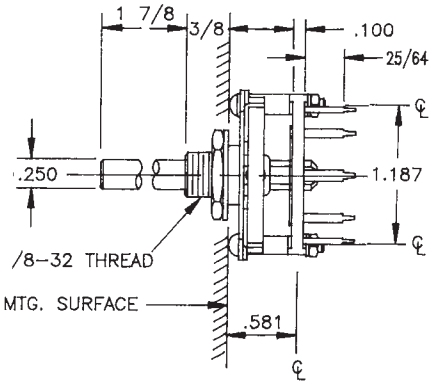

D6C - CERAMIC CONSTRUCTION

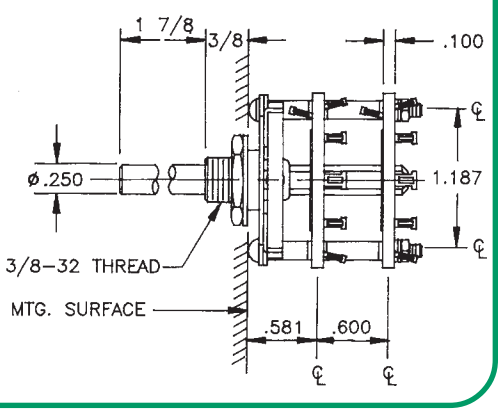

CUSTOM SWITCHES ARE AVAILABLE. CONTACT THE FACTORY WITH YOUR COMPLETE SPECIFICATIONS.

ELECTROSWITCH • ELECTRONIC PRODUCTS
UNIT OF ELECTRO SWITCH CORP.
2010 Yonkers Road
Raleigh, NC 27604
Telephone: (888) ROTARYS or (919) 833-0707
Fax: (800) 909-9171 or (919) 833-8016

D7 - SERIES

SPECIFICATIONS AND ORDERING INFORMATION

1 7/8" DIAMETER 2.25 AMPS @ 28 VDC

The D7 Series, constructed with a dual-ball, hill and valley index, has increased the physical size of the switch conductors allowing for additional current carrying capabilities. Standard designs utilize glass epoxy or ceramic insulations, solder lug terminals, and 30° adjustable stop indexing.

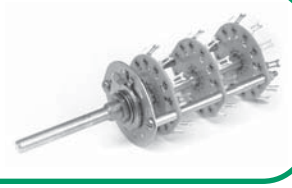

SPECIFICATIONS

ELECTRICAL

Current and Voltage Rating: Make and break resistive load 2.25 amps @ 28 VDC; 1.0 amp @ 115 VAC.
Current Carrying Capacity: 9 amps.
Dielectric Strength: 1,500 VAC between current carrying parts and ground.
Contact Resistance: Average initial 3 milliohms.
Insulation Resistance: Glass in excess of 750,000 megohms. Ceramic in excess of 1,000,000 megohms.

Hardware: Mounting nut and lockwasher are shipped assembled.

MECHANICAL

Materials and Finishes: All parts utilize non-corrosive materials as standard.
Clips and Rotors: Brass with silver plate as standard.
Insulation: Glass epoxy, or ceramic.
Index: Dual-ball, hill and valley design.
Index Life: 25,000 cycles minimum.
Index Torque: Switches have lowest practical torque consistent with crisp detenting and smooth, reliable operation.
Index Angles: Positive 30° standard, 60° available.
Index Stops: Adjustable standard, fixed or continuous.
Stop Strength: 25 in. lbs. minimum.

D

STANDARD PART NUMBER

GLASS EPOXY INSULATION SWITCHES - 30° INDEXING
ADJUSTABLE STOPS - SOLDER LUG TERMINALS - STOPS SET @ 2 POS.

POLES	ACTIVE POSITIONS	POLES/ SECTION	NO. OF SECTIONS	SHORTING	NON-SHORTING	FIG. *
01	02-11	1	1	D7G0111S	D7G0111N	DA
02	02-11	1	2	D7G0211S	D7G0211N	DA
02	02-05	2	1	D7G0205S	D7G0205N	DH
03	02-11	1	3	D7G0311S	D7G0311N	DA
03	02-03	3	1	D7G0303S	D7G0303N	DM
04	02-11	1	4	D7G0411S	D7G0411N	DA
04	02-05	2	2	D7G0405S	D7G0405N	DH
05	02-11	1	5	D7G0511S	D7G0511N	DA
06	02-05	2	3	D7G0605S	D7G0605N	DH
06	02-03	3	2	D7G0603S	D7G0603N	DM
06	02-11	1	6	D7G0611S	D7G0611N	DA
08	02-05	2	4	D7G0805S	D7G0805N	DH
09	02-03	3	3	D7G0903S	D7G0903N	DM
10	02-05	2	5	D7G1005S	D7G1005N	DH

CERAMIC INSULATION SWITCHES - 30° INDEXING
ADJUSTABLE STOPS - SOLDER LUG TERMINALS - STOPS SET @ 2 POS.

POLES	ACTIVE POSITIONS	POLES/ SECTION	NO. OF SECTIONS	SHORTING	NON-SHORTING	FIG. *
01	02-11	1	1	D7C0111S	D7C0111N	DA
02	02-11	1	2	D7C0211S	D7C0211N	DA
02	02-05	2	1	D7C0205S	D7C0205N	DH
03	02-11	1	3	D7C0311S	D7C0311N	DA
03	02-03	3	1	D7C0303S	D7C0303N	DM
04	02-05	2	2	D7C0405S	D7C0405N	DH
06	02-05	2	3	D7C0605S	D7C0605N	DH
06	02-03	3	2	D7C0603S	D7C0603N	DM
60° INDEXING						
01	02-06	1	1	_____	D7C0106N-60	DK
02	02-06	1	2	_____	D7C0206N-60	DK
03	02-06	1	3	_____	D7C0306N-60	DK
04	02-06	1	4	_____	D7C0406N-60	DK
05	02-06	1	5	_____	D7C0506N-60	DK

* FIGURES ARE SHOWN ON PAGES 55 AND 56.

DIMENSIONS

STANDARD CONSTRUCTION

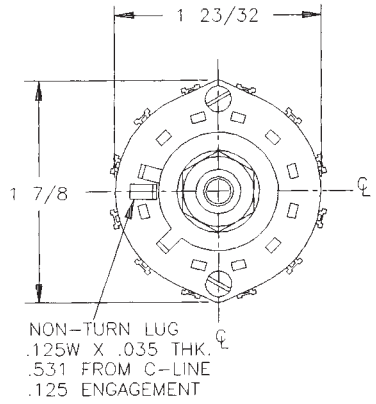

D7G - GLASS EPOXY CONSTRUCTION

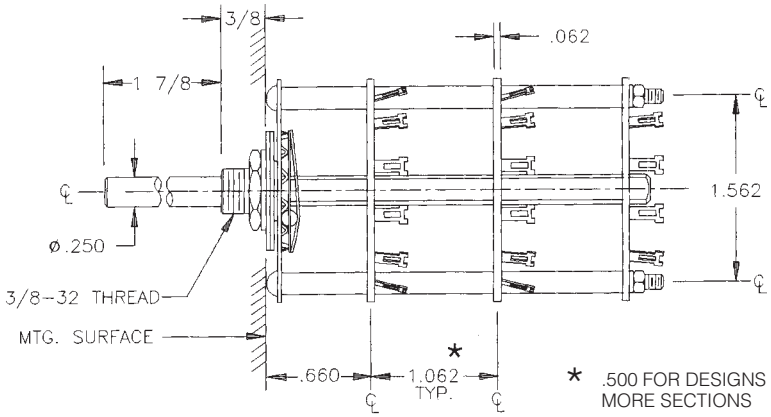

ELECTROSWITCH • ELECTRONIC PRODUCTS
UNIT OF ELECTRO SWITCH CORP.
2010 Yonkers Road
Raleigh, NC 27604
Telephone: (888) ROTARYS or (919) 833-0707
Fax: (800) 909-9171 or (919) 833-8016

D7 - SERIES

How to Order Additional Options:

2 DIGIT SERIES	INSULATION TYPE	TOTAL POLES	ACTIVE POSITIONS	CONTACT TYPE	INDEX ANGLE	STOP TYPE	SHAFT/ BUSHING	SHAFT FLAT
D7	G - GLASS C - CERAMIC	01 - MIN.	12 - MAX @ 30° 06 - MAX @ 60°	S - SHORTING N - NON-SHORTING	30° 60°	A - ADJ. F - FIXED C - CONT.	SEE CHART "A"	SEE CHART "B"

CUSTOMERS SPECIFIED ORDER NUMBER FOR STANDARD OPTIONS

D 7 [ ] (SPECIFY) [ ][ ] (SPECIFY) [ ][ ] (SPECIFY) [ ] (SPECIFY) —

ADDITIONAL OPTIONS

[ ][ ] (SPECIFY) [ ] (SPECIFY) [ ][ ] (SPECIFY) [ ] (SPECIFY)

SHAFT, BUSHING, AND FLAT OPTIONS

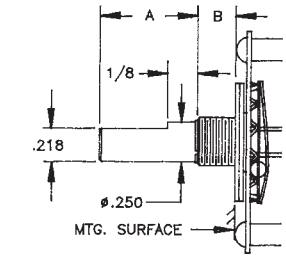

CHART "A"

P/N OPT.	SHAFT LGTH. "A"	BUSH. LGTH. "B"
01	3/8	1/4
02	3/8	3/8
03	1/2	1/4
04	1/2	3/8
05	9/16	1/4
06	9/16	3/8
07	3/4	1/4
08	3/4	3/8
09	1	1/4
10	1	3/8
11	1 1/2	1/4
12	1 1/2	3/8
13	1 7/8	1/4
14	1 7/8	3/8

- STD

CHART "B"

P/N OPT.	FLAT ANGLE
B	ROUND
U	15°
W	165°
Y	195°
Z	345°

- STD

SHAFT AS VIEWED WITH NON-TURN LUG AT 9 O'CLOCK AND SHAFT IN EXTREME CCW POSITION AND STRUT BOLTS ORIENTED VERTICALLY.

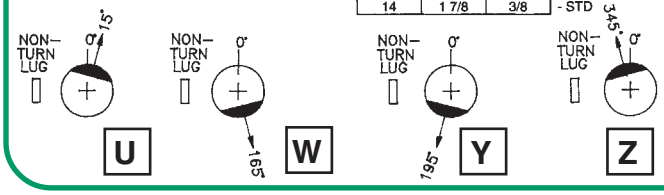

INSULATION AND INDEX OPTIONS

D7C - CERAMIC CONSTRUCTION
30° INDEX

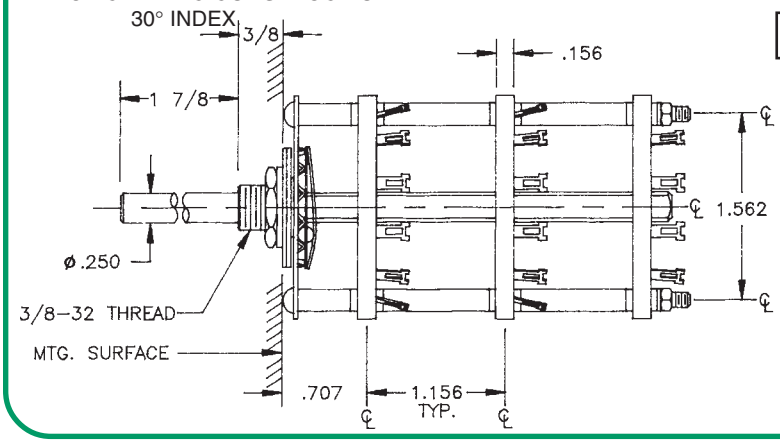

D7C - CERAMIC INSULATION
60 60° INDEX

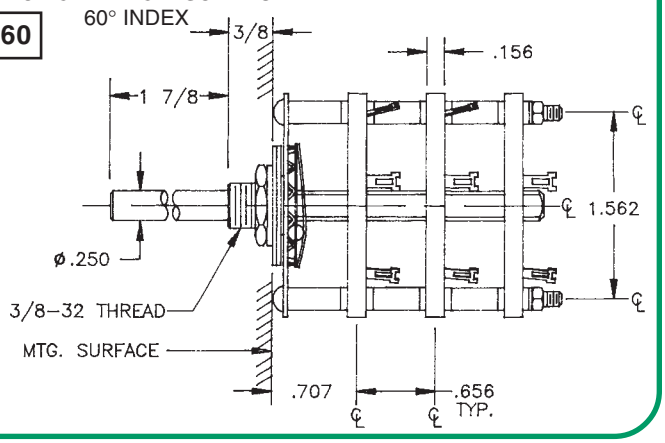

CUSTOM SWITCHES ARE AVAILABLE. CONTACT THE FACTORY WITH YOUR COMPLETE SPECIFICATIONS.

ELECTROSWITCH • ELECTRONIC PRODUCTS
UNIT OF ELECTRO SWITCH CORP.
2010 Yonkers Road
Raleigh, NC 27604
Telephone: (888) ROTARYS or (919) 833-0707
Fax: (800) 909-9171 or (919) 833-8016

D8 - SERIES

SPECIFICATIONS AND ORDERING INFORMATION

2 5/16" DIAMETER 2.25 AMPS @ 28 VDC

The D8 Series switches are heavy duty, 18 position, 20° index, and glass epoxy insulation. Double eyelet construction is standard to assist in supporting larger wiring harness applications. Positive indexing is provided by a dual-ball, hill and valley index assembly.

SPECIFICATIONS

ELECTRICAL

Current and Voltage Rating: Make and break resistive load 2.25 amps @ 28 VDC; 1.0 amp @ 115 VAC.
Current Carrying Capacity: 9 amps.
Dielectric Strength: 1,000 VAC between current carrying parts and ground.
Contact Resistance: Average initial 5 milliohms.
Insulation Resistance: In excess of 750,000 megohms.

Hardware: Mounting nut and lockwasher are shipped assembled.

MECHANICAL

Materials and Finishes: All parts utilize non-corrosive materials as standard.
Clips and Rotors: Brass with silver plate as standard.
Insulation: Glass epoxy.
Index: Dual-ball, hill and valley.
Index Life: 25,000 cycles minimum.
Index Torque: Switches have lowest practical torque consistent with crisp detenting and smooth, reliable operation.
Index Angles: Positive 20° standard.
Index Stops: Adjustable standard, fixed or continuous.
Stop Strength: 25 in. lbs. minimum.

D

STANDARD PART NUMBER

GLASS EPOXY INSULATION SWITCHES - 20° INDEXING
ADJUSTABLE STOPS SET @ 2 POS. - SOLDER LUG TERMINALS

POLES	ACTIVE POSITIONS	POLES/ SECTION	NO. OF SECTIONS	SHORTING	NON-SHORTING	FIG. *
01	02-17	1	1	D8G0117S	D8G0117N	DT
02	02-17	1	2	D8G0217S	D8G0217N	DT
03	02-17	1	3	D8G0317S	D8G0317N	DT
04	02-17	1	4	D8G0417S	D8G0417N	DT
05	02-17	1	5	D8G0517S	D8G0517N	DT
06	02-17	1	6	D8G0617S	D8G0617N	DT
07	02-17	1	7	D8G0717S	D8G0717N	DT
08	02-17	1	8	D8G0817S	D8G0817N	DT

* FIGURES ARE SHOWN ON PAGE 57.

DIMENSIONS

STANDARD CONSTRUCTION
D8G - GLASS EPOXY CONSTRUCTION

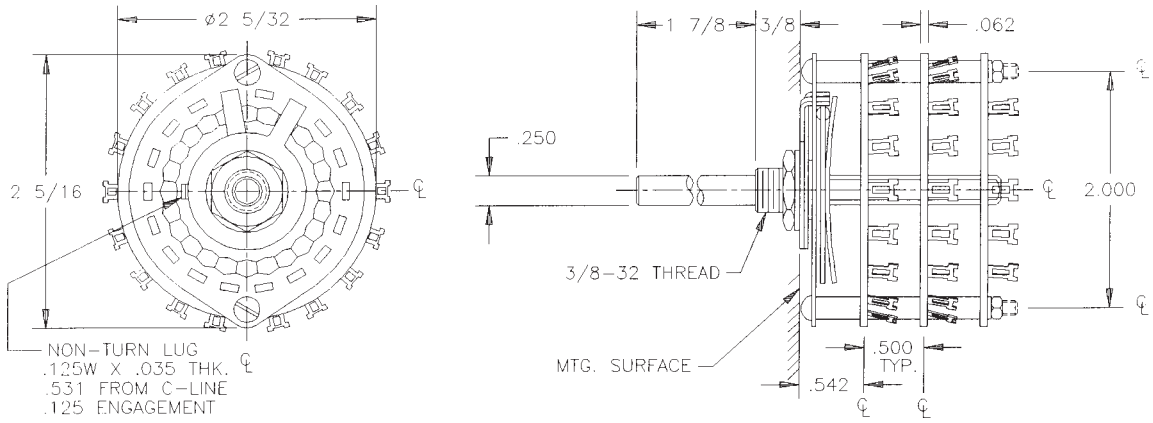

ELECTROSWITCH • ELECTRONIC PRODUCTS
UNIT OF ELECTRO SWITCH CORP.
2010 Yonkers Road
Raleigh, NC 27604
Telephone: (888) ROTARYS or (919) 833-0707
Fax: (800) 909-9171 or (919) 833-8016

D8 - SERIES

How to Order Additional Options:

2 DIGIT SERIES	INSULATION TYPE	TOTAL POLES	ACTIVE POSITIONS	CONTACT TYPE	TERMINAL TYPE	INDEX ANGLE	STOP TYPE	SHAFT/ BUSHING	SHAFT FLAT
D8	G - GLASS	01 - MIN.	18 - MAX @ 20°	N - NON SHORTING S - SHORTING			A - ADJ. F - FIXED C - CONT.	SEE CHART "A"	SEE CHART "B"

CUSTOMERS SPECIFIED ORDER NUMBER FOR STANDARD OPTIONS

D 8 G [ ][ ] (SPECIFY) [ ][ ] (SPECIFY) [ ] (SPECIFY) —

ADDITIONAL OPTIONS

[ ] (SPECIFY) [ ][ ] (SPECIFY) [ ] (SPECIFY)

SHAFT, BUSHING, AND FLAT OPTIONS

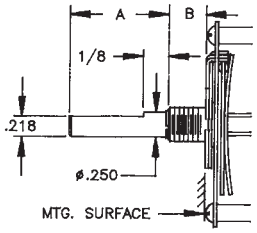

CHART "A"

P/N OPT.	SHAFT LGTH. "A"	BUSH. LGTH. "B"
01	3/8	1/4
02	3/8	3/8
03	1/2	1/4
04	1/2	3/8
05	9/16	1/4
06	9/16	3/8
07	3/4	1/4
08	3/4	3/8
09	1	1/4
10	1	3/8
11	1 1/2	1/4
12	1 1/2	3/8
13	1 7/8	1/4
14	1 7/8	3/8 - STD.

CHART "B"

P/N OPT.	FLAT ANGLE
B	ROUND - STD.
U	10°
W	170°
Y	190°
Z	350°

SHAFT AS VIEWED WITH NON-TURN LUG AT 9 O'CLOCK AND SHAFT IN EXTREME CCW POSITION AND STRUT BOLTS ORIENTED VERTICALLY.

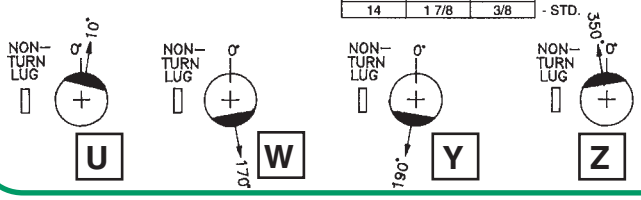

D

CUSTOM SWITCHES ARE AVAILABLE. CONTACT THE FACTORY WITH YOUR COMPLETE SPECIFICATIONS.

ELECTROSWITCH • ELECTRONIC PRODUCTS
UNIT OF ELECTRO SWITCH CORP.
2010 Yonkers Road
Raleigh, NC 27604
Telephone: (888) ROTARYS or (919) 833-0707
Fax: (800) 909-9171 or (919) 833-8016

D9 - SERIES

SPECIFICATIONS AND ORDERING INFORMATION

2 5/16" DIAMETER 1.5 AMPS @ 28 VDC

The D9 Series has a 15° index with a maximum of 24 positions. Indexing is provided by a dual-ball hill and valley design. Standard features include solder lug terminals, adjustable stops and glass epoxy insulation.

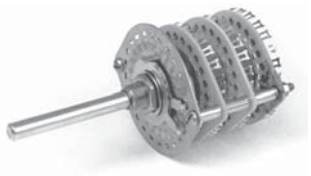

SPECIFICATIONS

ELECTRICAL

Current and Voltage Rating: Make and break resistive load 1.5 amps @ 28 VDC; 0.25 amp @ 115 VAC.
Current Carrying Capacity: 9 amps.
Dielectric Strength: 1,000 VAC between current carrying parts and ground.
Contact Resistance: Average initial 5 milliohms.
Insulation Resistance: In excess of 750,000 megohms.

Hardware: Mounting nut and lockwasher are shipped assembled.

MECHANICAL

Materials and Finishes: All parts utilize non-corrosive materials as standard.
Clips and Rotors: Brass with silver plate as standard.
Insulation: Glass epoxy.
Index: Dual-ball, hill and valley design.
Index Life: 25,000 cycles minimum.
Index Torque: Switches have lowest practical torque consistent with crisp detenting and smooth, reliable operation.
Index Angles: Positive 15° standard.
Index Stops: Adjustable standard, fixed or continuous.
Stop Strength: 25 in. lbs. minimum.

D

STANDARD PART NUMBER

GLASS EPOXY INSULATION SWITCHES - 15° INDEXING
ADJUSTABLE STOPS - SOLDER LUG TERMINALS - STOPS SET @ 2 POS.

POLES	ACTIVE POSITIONS	POLES/ SECTION	NO. OF SECTIONS	SHORTING	NON-SHORTING	FIG. *
01	02-23	1	1	D9G0123S	D9G0123N	DU
02	02-23	1	2	D9G0223S	D9G0223N	DU
03	02-23	1	3	D9G0323S	D9G0323N	DU
04	02-23	1	4	D9G0423S	D9G0423N	DU
05	02-23	1	5	D9G0523S	D9G0523N	DU
06	02-23	1	6	D9G0623S	D9G0623N	DU
07	02-23	1	7	D9G0723S	D9G0723N	DU
08	02-23	1	8	D9G0823S	D9G0823N	DU

* FIGURES ARE SHOWN ON PAGE 57.

DIMENSIONS

STANDARD CONSTRUCTION
D9G - GLASS EPOXY CONSTRUCTION

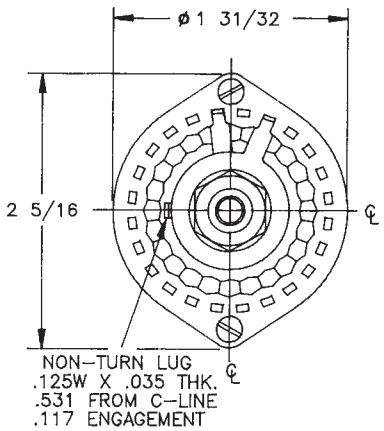

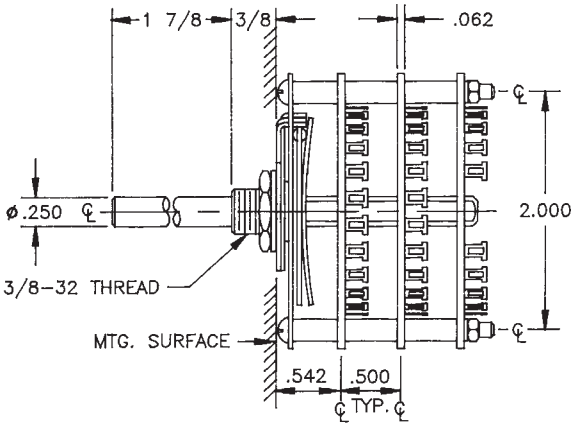

ELECTROSWITCH • ELECTRONIC PRODUCTS
UNIT OF ELECTRO SWITCH CORP.
2010 Yonkers Road
Raleigh, NC 27604
Telephone: (888) ROTARYS or (919) 833-0707
Fax: (800) 909-9171 or (919) 833-8016

D9 - SERIES

How to Order Additional Options:

2 DIGIT SERIES	INSULATION TYPE	TOTAL POLES	ACTIVE POSITIONS	CONTACT TYPE	TERMINAL TYPE	INDEX ANGLE	STOP TYPE	SHAFT/ BUSHING	SHAFT FLAT
D9	G - GLASS	01 - MIN.	24 - MAX @ 15°	S - SHORTING N - NON SHORTING	L - SOLDER LUG R - REAR P.C.		A - ADJ. F - FIXED C - CONT.	SEE CHART "A"	SEE CHART "B"

CUSTOMERS SPECIFIED ORDER NUMBER FOR STANDARD OPTIONS — ADDITIONAL OPTIONS

D	9	G				—				
			(SPECIFY)	(SPECIFY)	(SPECIFY)		(SPECIFY)	(SPECIFY)	(SPECIFY)	(SPECIFY)

SHAFT, BUSHING, AND FLAT OPTIONS

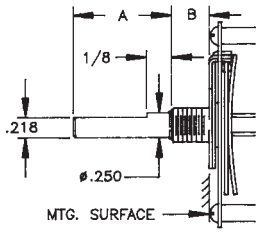

CHART "A"

P/N OPT.	SHAFT LGTH. "A"	BUSH. LGTH. "B"
01	3/8	1/4
02	3/8	3/8
03	1/2	1/4
04	1/2	3/8
05	9/16	1/4
06	9/16	3/8
07	3/4	1/4
08	3/4	3/8
09	1	1/4
10	1	3/8
11	1 1/2	1/4
12	1 1/2	3/8
13	1 7/8	1/4
14	1 7/8	3/8 - STD

CHART "B"

P/N OPT.	FLAT ANGLE
B	ROUND - STD
U	7.5°
W	172.5°
Y	187.5°
Z	352.5°

SHAFT AS VIEWED WITH NON-TURN LUG AT 9 O'CLOCK AND SHAFT IN EXTREME CCW POSITION AND STRUT BOLTS ORIENTED VERTICALLY.

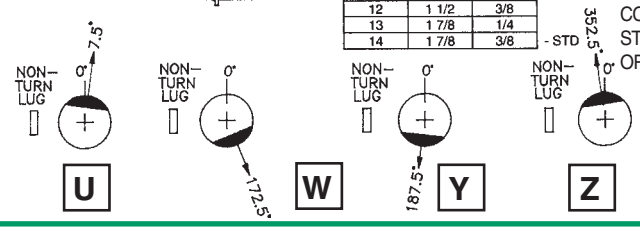

PRINTED CIRCUIT BOARD OPTIONS

R

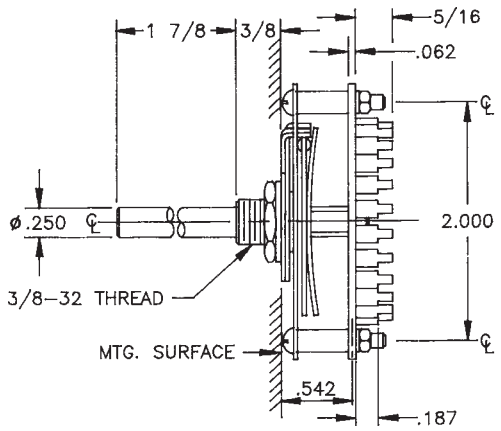

P.C. BOARD MOUNTING PATTERN

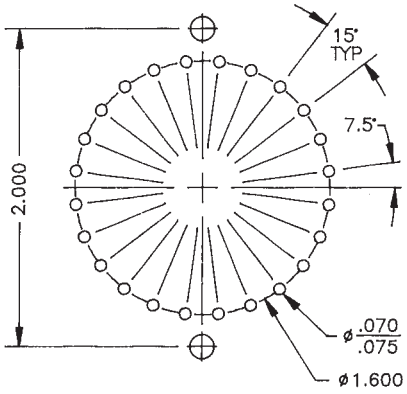

CUSTOM SWITCHES ARE AVAILABLE. CONTACT THE FACTORY WITH YOUR COMPLETE SPECIFICATIONS.

ELECTROSWITCH • ELECTRONIC PRODUCTS
UNIT OF ELECTRO SWITCH CORP.
2010 Yonkers Road
Raleigh, NC 27604
Telephone: (888) ROTARYS or (919) 833-0707
Fax: (800) 909-9171 or (919) 833-8016

SELECTOR GUIDE OPEN FRAME ROTARY ELECTRONIC SWITCHES

	CHARACTERISTICS	SERIES E1	SERIES E2	SERIES E3	SERIES E4	SERIES E5
	Page Number	37	38	39	40,41	42,43
	Construction	OPEN	OPEN	OPEN	OPEN	OPEN
	Diameter	1.50"	N/A	1.500"	2.812"	2.5 x 1.625"
	Positions	2 - 3	2 - 5	2 - 3	2 - 17	2 - 24
E	**Current and Voltage**	.25A @ 115 VAC	0.5A @ 115 VAC	0.5A @ 115 VAC	9.0A @ 115 VAC	0.25A @ 115 VAC
L		1.5A @ 28 VDC	1.5A @ 28 VDC	1.5A @ 28 VDC	11.0A @ 28 VDC	0.55A @ 28 VDC
E	**Current Carrying Capacity**	9A	9A	9A	17A	1A
C	**Dielectric Strength**	1,000 VAC	1,000 VAC	1,500 VAC	3,000 VAC	750 VAC
T	**Insulation Resistance**	750,000	750,000	750,000	1,000,000	750,000
R	**(megohms)**					
I	**Contact Resistance**	3.5	3.5	3.5	7	N/A
C	**(milliohms)**					
A						
L						
M	**Insulation** - Glass Epoxy	STANDARD	STANDARD	STANDARD	NO	STANDARD
A	Ceramic	NO	NO	YES	STANDARD	NO
T						
E						
R						
I	**Contacts** - Silver Alloy ★	YES	YES	YES	STANDARD	YES
A	Brass/Silver Plate	STANDARD	STANDARD	STANDARD	NO	STANDARD
L						
M	**Stop Strength**	10 in. lb.	25 in. lb.	25 in. lb.	25 in. lb.	25 in. lb.
E	**Mechanical Life**	10,000 cycles	25,000 cycles	25,000 cycles	25,000 cycles	25,000 cycles
C	**Detenting Angles: 15°**	—	15	—	—	15
H	**20°**	—	—	—	20	—
A	**22.5°**	—	—	—	—	—
N	**30°**	30	30	30	—	—
I	**36°**	—	—	—	—	—
C	**45°**	—	—	—	—	—
A	**60°**	—	—	—	—	—
L	**90°**	—	—	—	—	—
O	**Quick Connect**	NO	NO	NO	NO	NO
P	**Rear PC Mount**	YES	YES	YES	NO	NO
T	**Vertical PC Mount ★**	NO	NO	NO	NO	YES
I	**Front PC Mount ★**	YES	NO	NO	NO	NO
O	**Dual Concentric Designs ★**	NO	NO	NO	NO	NO
N	**Keylock ★**	NO	NO	NO	NO	NO
S	**Spring Return ★**	NO	YES	YES	NO	NO
	Water Resistant Seals ★	NO	NO	YES	NO	YES

★ **Contact factory**

ELECTROSWITCH • ELECTRONIC PRODUCTS
UNIT OF ELECTRO SWITCH CORP.
2010 Yonkers Road
Raleigh, NC 27604
Telephone: (888) ROTARYS or (919) 833-0707
Fax: (800) 909-9171 or (919) 833-8016

SPECIFICATIONS AND ORDERING INFORMATION

E1 - SERIES

1 1/2" MAXIMUM DIAMETER 1.5 AMPS @ 28 VDC

The E1 Series offers a strong positive 30° index in a hill and valley design, and a small front housing. This series is superior where depth-behind-panel is critical.

SPECIFICATIONS

ELECTRICAL

Current and Voltage Rating: Make and break resistive load 1.5 amps @ 28 VDC; 0.25 amp @ 115 VAC.
Current Carrying Capacity: 9 amps.
Dielectric Strength: 1,000 VAC between current carrying parts and ground.
Contact Resistance: Average initial 3.5 milliohms.
Insulation Resistance: In excess of 750,000 megohms.

Hardware: Mounting nut and lockwasher are shipped assembled.

MECHANICAL

Materials and Finishes: All parts utilize non-corrosive materials as standard.
Clips and Rotors: Brass with silver plate as standard.
Insulation: Glass epoxy.
Index: Formed spring, hill and valley design.
Index Life: 10,000 cycles minimum.
Index Torque: Switches have lowest practical torque consistent with crisp detenting and smooth, reliable operation.
Index Angles: Positive 30° standard.
Index Stops: Fixed stops standard.
Stop Strength: 10 in. lbs. minimum.

STANDARD PART NUMBER

GLASS EPOXY INSULATION
SWITCHES - 30° INDEXING - FIXED STOPS - SOLDER LUG TERMINALS

POLES	ACTIVE POSITIONS	POLES/ SECTION	NO. OF SECTIONS	SHORTING	NON-SHORTING	DETAIL
01	02	1	1	E1G0102S	E1G0102N	A
01	03	1	1	E1G0103S	E1G0103N	B
02	02	2	1	E1G0202S	E1G0202N.	C
02	03	2	1	E1G0203S	E1G0203N	D

DIMENSIONS

STANDARD CONSTRUCTION
E1G - GLASS EPOXY CONSTRUCTION

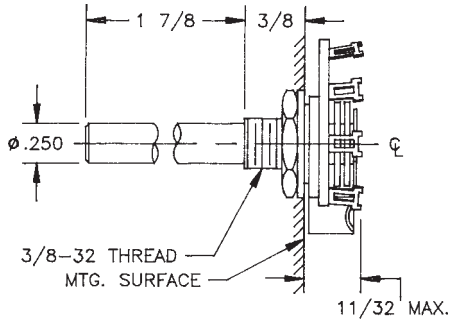

E

DIMENSIONS

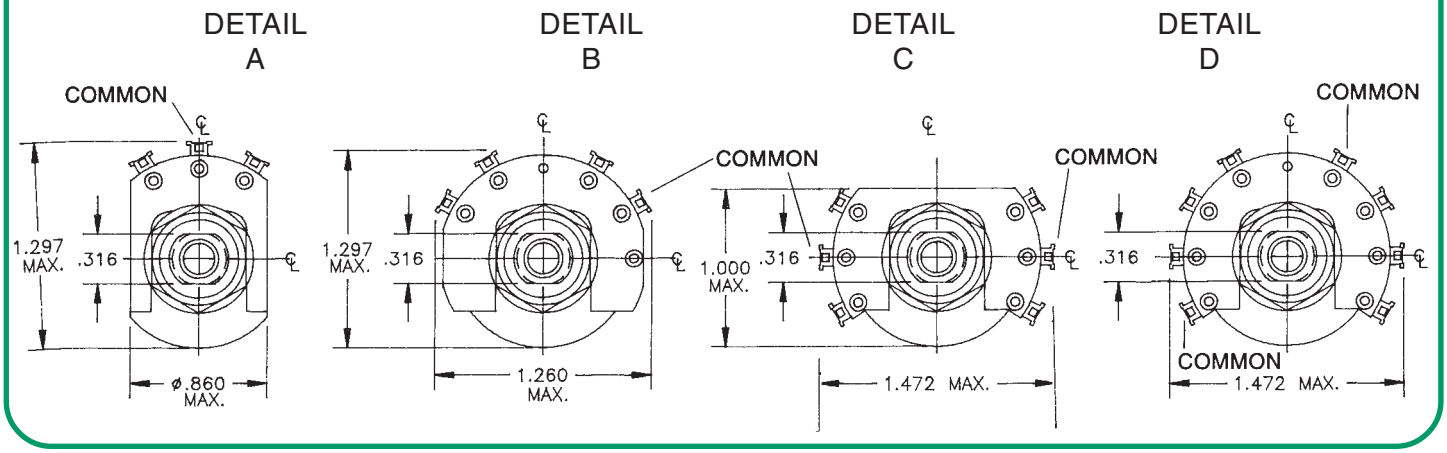

ELECTROSWITCH • ELECTRONIC PRODUCTS
UNIT OF ELECTRO SWITCH CORP.
2010 Yonkers Road
Raleigh, NC 27604
Telephone: (888) ROTARYS or (919) 833-0707
Fax: (800) 909-9171 or (919) 833-8016

E2 - SERIES

SPECIFICATIONS AND ORDERING INFORMATION

Lever Action 1.5 AMPS @ 28 VDC

The E2 Series is our lever action switch, originally designed for the electric guitar market. It offers positive 2-5 position switching, a 30° or a 15° index, and solder lug terminals.

SPECIFICATIONS

ELECTRICAL

Current and Voltage Rating: Make and break resistive load 1.5 amps @ 28 VDC; 0.5 amp @ 115 VAC.
Current Carrying Capacity: 9 amps.
Dielectric Strength: 1,000 VAC between current carrying parts and ground.
Contact Resistance: Average initial 3.5 milliohms.
Insulation Resistance: In excess of 750,000 megohms.

MECHANICAL

Materials and Finishes: All parts utilize non-corrosive materials as standard.
Clips and Rotors: Brass with silver plate as standard.
Insulation: Glass epoxy.
Index: Cam and roller with coil spring.
Index Life: 25,000 cycles minimum.
Index Torque: Switches have lowest practical torque consistent with crisp detenting and smooth, reliable operation.
Index Angles: Positive 30°, 15° and spring return.
Index Stops: Fixed stops standard.
Stop Strength: 25 in. lbs. minimum.

STANDARD PART NUMBER

LEVER
SWITCHES - 30° INDEXING - FIXED STOPS - SOLDER LUG TERMINALS

POLES	ACTIVE POSITIONS	POLES/ SECTION	NO. OF SECTIONS	SHORTING	NON-SHORTING	DESCRIPTION	DETAIL
02	03	2	1	E2G0203S-1	E2G0203N-1	..... POSITIVE INDEX ONE SIDE TO CENTER, SPRING RETURN OPPOSITE SIDE TO CENTER.	E
02	05	2	1	E2G0205S-15	----------	..... 2 POSITIVE INDEX POSITIONS BOTH SIDES OF CENTER.	E
02	03	2	1	E2G0203S	E2G0203N	..... POSITIVE INDEX BOTH SIDES OF CENTER.	E
02	03	2	1	E2G0203S-2	E2G0203N-2	..... SPRING RETURN BOTH SIDES TO CENTER.	E
04	02	4	1	E2G0402S-3	E2G0402N-3	..... SPRING RETURN TO CENTER.	E
04	02	4	1	E2G0402S	E2G0402N	..... POSITIVE INDEX.	E

E

DIMENSIONS

STANDARD CONSTRUCTION

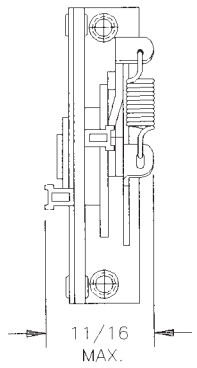

DETAIL E

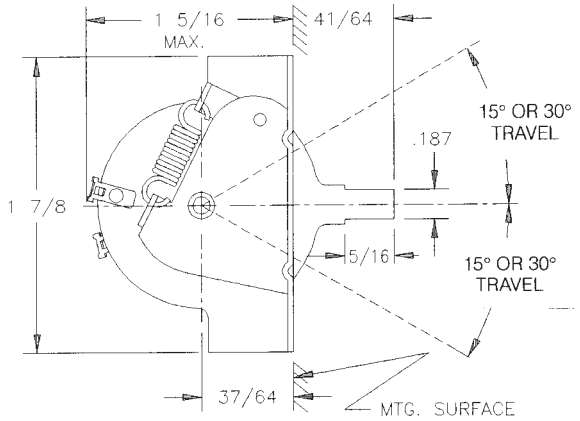

DETAIL F

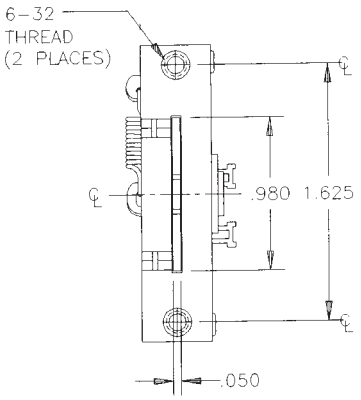

ELECTROSWITCH • ELECTRONIC PRODUCTS
UNIT OF ELECTRO SWITCH CORP.
2010 Yonkers Road
Raleigh, NC 27604
Telephone: (888) ROTARYS or (919) 833-0707
Fax: (800) 909-9171 or (919) 833-8016

SPECIFICATIONS AND ORDERING INFORMATION

E3 - SERIES

1 1/2" DIAMETER 1.5 AMPS @ 28 VDC

The E3 Series was designed to provide spring return action in an open frame construction. Standard construction is available with 2 or 3 positions, 30° index, and solder lug terminals.

SPECIFICATIONS

ELECTRICAL

Current and Voltage Rating: Make and break resistive load 1.5 amps @ 28 VDC; 0.5 amp @ 115 VAC.
Current Carrying Capacity: 9 amps.
Dielectric Strength: 1,500 VAC between current carrying parts and ground.
Contact Resistance: Average initial 3.5 milliohms.
Insulation Resistance: In excess of 750,000 megohms.

Hardware: Mounting nut and lockwasher are shipped assembled.

MECHANICAL

Materials and Finishes: All parts utilize non-corrosive materials as standard.
Clips and Rotors: Brass with silver plate as standard.
Insulation: Glass epoxy.
Index: Coil spring.
Index Life: 25,000 cycles minimum.
Index Torque: Switches have lowest practical torque consistent with crisp detenting and smooth, reliable operation.
Index Angles: Positive 30° standard.
Index Stops: Fixed stops standard.
Stop Strength: 25 in. lbs. minimum.

STANDARD PART NUMBER

SPRING RETURN
SWITCHES - 30° INDEXING - FIXED STOPS - SOLDER LUG TERMINALS

POLES	ACTIVE POSITIONS	POLES/ SECTION	NO. OF SECTIONS	SHORTING	NON-SHORTING	DESCRIPTION
04	02	4	1	E3G0402S-1	E3G0402N-1	..... SPRING RETURN FROM CLOCKWISE.
06	03	3	2	E3G0603S-2	E3G0603N-2	..... SPRING RETURN BOTH SIDES TO CENTER.
06	03	3	2	E3G0603S-3	E3G0603N-3	..... SPRING RETURN CLOCKWISE TO CENTER, POSITIVE INDEX COUNTER CLOCKWISE OF CENTER.

E

DIMENSIONS

STANDARD CONSTRUCTION

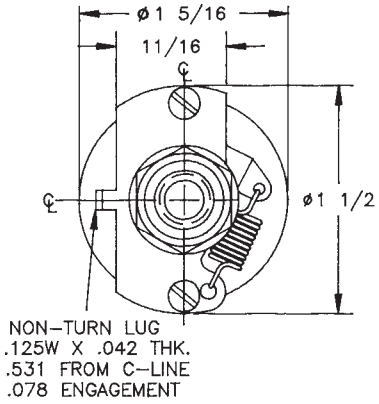

E3G - GLASS EPOXY CONSTRUCTION

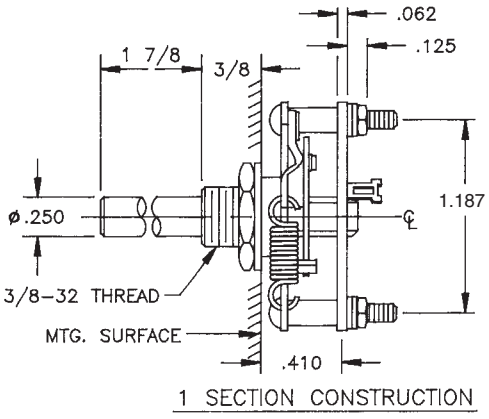

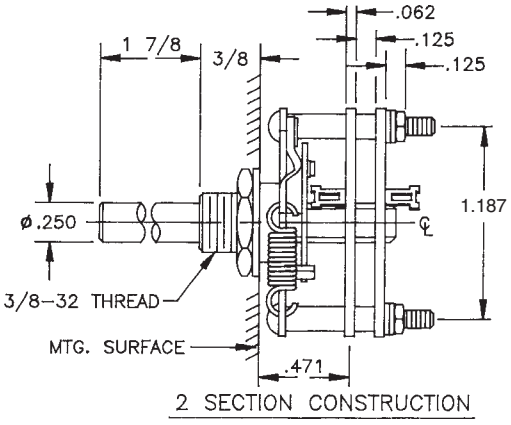

ELECTROSWITCH • ELECTRONIC PRODUCTS
UNIT OF ELECTRO SWITCH CORP.
2010 Yonkers Road
Raleigh, NC 27604
Telephone: (888) ROTARYS or (919) 833-0707
Fax: (800) 909-9171 or (919) 833-8016

E4 - SERIES

SPECIFICATIONS AND ORDERING INFORMATION

2 13/16" DIAMETER 11.0 AMPS @ 28 VDC

The E4 Series was designed to offer maximum power ratings in an electronic open frame switch. Standard construction consists of a 20° index, 2-17 positions, and solder lug terminals.

SPECIFICATIONS

ELECTRICAL

Current and Voltage Rating: Make and break resistive load 11.0 amps @ 28 VDC; 9.0 amps @ 115 VAC.
Current Carrying Capacity: 17 amps.
Dielectric Strength: 3000 VAC between current carrying parts and ground.
Contact Resistance: Average initial 7.0 milliohms.
Insulation Resistance: In excess of 1,000,000 megohms.

Hardware: Mounting nut and lockwasher are shipped assembled.

MECHANICAL

Materials and Finishes: All parts utilize non-corrosive materials as standard.
Contacts and Collector Rings: Coin silver as standard.
Insulation: Ceramic.
Index: Dual-ball, hill and valley design.
Index Life: 25,000 cycles minimum.
Index Torque: Switches have lowest practical torque consistent with crisp detenting and smooth, reliable operation.
Index Angles: Positive 20° standard.
Index Stops: Adjustable stops standard, fixed or continuous.
Stop Strength: 25 in. lbs. minimum.

STANDARD PART NUMBER

20° INDEXING

SWITCHES ADJUSTABLE STOPS - SOLDER LUG TERMINALS - STOPS SET @ 2 POS.

POLES	ACTIVE POSITIONS	POLES/ SECTION	NO. OF SECTIONS	SHORTING	NON-SHORTING	FIG. *
01	02-17	1	1	E4C0117S	E4C0117N	EA
02	02-17	1	2	E4C0217S	E4C0217N	EA
02	02-08	2	1	E4C0208S	E4C0208N	EB
03	02-17	1	3	E4C0317S	E4C0317N	EA
03	02-05	3	1	E4C0305S	E4C0305N	EC
04	02-17	1	4	E4C0417S	E4C0417N	EA
04	02-08	2	2	E4C0408S	E4C0408N	EB
05	02-17	1	5	E4C0517S	E4C0517N	EA

POLES	ACTIVE POSITIONS	POLES/ SECTION	NO. OF SECTIONS	SHORTING	NON-SHORTING	FIG. *
06	02-17	1	6	E4C0617S	E4C0617N	EA
06	02-08	2	3	E4C0608S	E4C0608N	EB
06	02-05	3	2	E4C0605S	E4C0605N	EC
08	02-08	2	4	E4C0808S	E4C0808N	EB
09	02-05	3	3	E4C0905S	E4C0905N	EC
10	02-08	2	5	E4C1008S	E4C1008N	EB
12	02-05	3	4	E4C1205S	E4C1205N	EC
15	02-05	3	5	E4C1505S	E4C1505N	EC

* FIGURES ARE SHOWN ON PAGE 57.

E

DIMENSIONS

STANDARD CONSTRUCTION

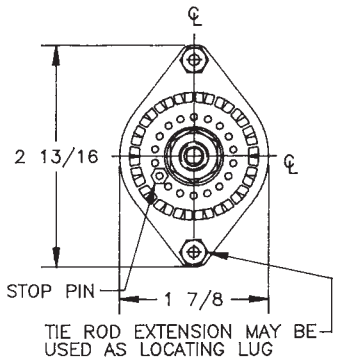

E4C - CERAMIC CONSTRUCTION

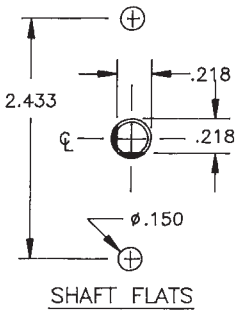

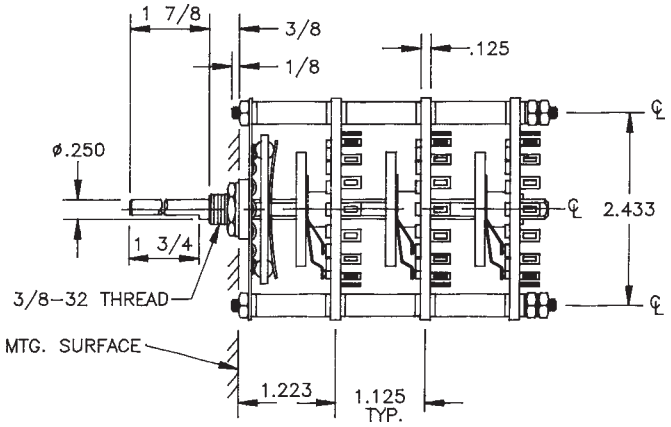

ELECTROSWITCH • ELECTRONIC PRODUCTS
UNIT OF ELECTRO SWITCH CORP.
2010 Yonkers Road
Raleigh, NC 27604
Telephone: (888) ROTARYS or (919) 833-0707
Fax: (800) 909-9171 or (919) 833-8016

E4 - SERIES

How to Order Additional Options:

2 DIGIT SERIES	INSULATION TYPE	TOTAL POLES	ACTIVE POSITIONS	CONTACT TYPE	STOP TYPE		
E4	C - CERAMIC	01 - MIN.	17 - MAX @ 20°	S - SHORTING N - NON SHORTING	A - ADJ. F - FIXED C - CONT.	SEE CHART "A"	SEE CHART "B"

CUSTOMERS SPECIFIED ORDER NUMBER FOR STANDARD OPTIONS

E 4 C [ ][ ] (SPECIFY) [ ][ ] (SPECIFY) [ ] (SPECIFY) —

ADDITIONAL OPTIONS

[ ] (SPECIFY) [ ][ ] (SPECIFY) [ ] (SPECIFY)

SHAFT, BUSHING, AND FLAT OPTIONS

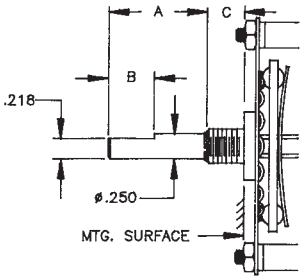

CHART "A"

P/N OPT.	SHAFT LGTH. "A"	FLAT LGTH. "B"	BUSH. LGTH. "C"	
01	3/8	1/4	1/4	
02	3/8	1/4	3/8	
03	1/2	11/32	1/4	
04	1/2	11/32	3/8	
05	3/4	15/32	1/4	
06	3/4	15/32	3/8	
07	1	19/32	1/4	
08	1	19/32	3/8	
09	1 1/2	5/8	1/4	
10	1 1/2	5/8	3/8	
11	1 7/8	5/8	1/4	
12	1 7/8	5/8	3/8	- STD.

CHART "B"

P/N OPT.	FLAT ANGLE	
B	ROUND	
U	10°	
W	170°	
T	180°	- STD.
Y	190°	
Z	350°	

SHAFT AS VIEWED IN EXTREME CCW POSITION AND STRUT BOLTS ORIENTED VERTICALLY.

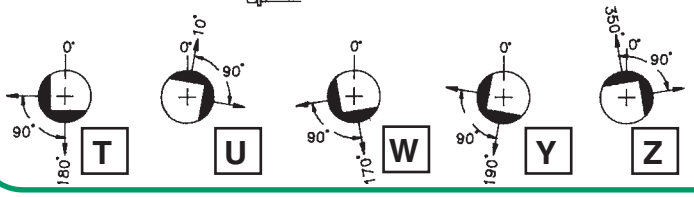

E

CUSTOM SWITCHES ARE AVAILABLE. CONTACT THE FACTORY WITH YOUR COMPLETE SPECIFICATIONS.

ELECTROSWITCH • ELECTRONIC PRODUCTS
UNIT OF ELECTRO SWITCH CORP.
2010 Yonkers Road
Raleigh, NC 27604
Telephone: (888) ROTARYS or (919) 833-0707
Fax: (800) 909-9171 or (919) 833-8016

E5 - SERIES

2 1/2" 0.55 AMP @ 28 VDC

SPECIFICATIONS AND ORDERING INFORMATION

The E5 Series offers a vertical printed circuit board mountable switch with up to 24 positions and a 15° index. This series is great where complex switching is required in a small package.

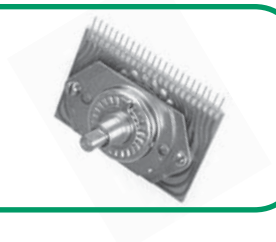

SPECIFICATIONS

ELECTRICAL

Current and Voltage Rating: Make and break resistive load 0.55 amp @ 28 VDC; 0.55 amp @ 115 VAC.
Current Carrying Capacity: 1 amp.
Dielectric Strength: 750 VAC between current carrying parts and ground.
Insulation Resistance: In excess of 750,000 megohms.

Hardware: Mounting nut and lockwasher are shipped assembled.

MECHANICAL

Materials and Finishes: All parts utilize non-corrosive materials as standard.
Clips and Rotors: Brass with silver plate as standard.
Insulation: Glass epoxy.
Index: Single-ball, hill and valley.
Index Life: 25,000 cycles minimum.
Index Torque: Switches have lowest practical torque consistent with crisp detenting and smooth, reliable operation.
Index Angles: Positive 15° standard.
Index Stops: Fixed standard or continuous.
Stop Strength: 25 in. lbs. minimum.

STANDARD PART NUMBER

VERTICAL PRINTED CIRCUIT BOARD
15° INDEXING - SOLDER LUG TERMINALS - FIXED STOPS

POLES	ACTIVE POSITIONS	POLES/ DECK	NO. OF DECKS	SHORTING	NON-SHORTING	FIG. *
01	23	1	1	E5G0123S	E5G0123N	ED
02	23	1	2	E5G0223S	E5G0223N	ED
03	23	1	3	E5G0323S	E5G0323N	ED
04	23	1	4	E5G0423S	E5G0423N	ED

VERTICAL PRINTED CIRCUIT BOARD
15° INDEXING - SOLDER LUG TERMINALS - CONTINUOUS ROTATION

POLES	ACTIVE POSITIONS	POLES/ DECK	NO. OF DECKS	SHORTING	NON-SHORTING	FIG. *
01	23	1	1	E5G0123S-C	E5G0123N-C	ED
02	23	1	2	E5G0223S-C	E5G0223N-C	ED
03	23	1	3	E5G0323S-C	E5G0323N-C	ED
04	23	1	4	E5G0423S-C	E5G0423N-C	ED

* FIGURES ARE SHOWN ON PAGE 57.

E

DIMENSIONS

STANDARD CONSTRUCTION

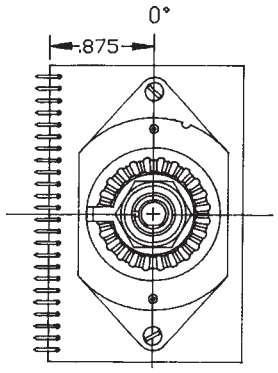

E5 - GLASS EPOXY CONSTRUCTION

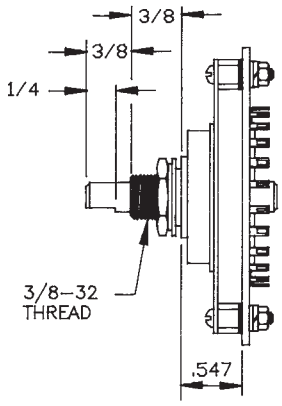

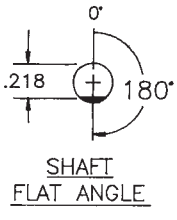

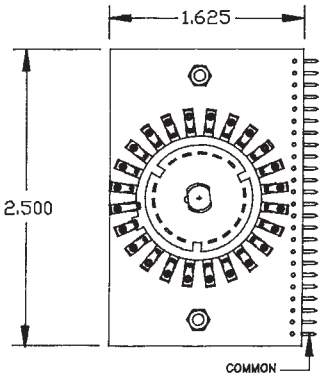

ELECTROSWITCH • ELECTRONIC PRODUCTS
UNIT OF ELECTRO SWITCH CORP.
2010 Yonkers Road
Raleigh, NC 27604
Telephone: (888) ROTARYS or (919) 833-0707
Fax: (800) 909-9171 or (919) 833-8016

E5 - SERIES

How to Order Additional Options:

2 DIGIT SERIES	INSULATION TYPE	TOTAL POLES	ACTIVE POSITIONS	CONTACT TYPE	STOP TYPE	SHAFT/ BUSHING	SHAFT FLAT
E5	G - GLASS	01 - MIN.	23 - MAX @ 15°	S - SHORTING N - NON SHORTING	F - FIXED 23 - POS. MAX. C - CONT. 24 - POS. MAX.	SEE CHART "A"	SEE CHART "B"

CUSTOMERS SPECIFIED ORDER NUMBER FOR STANDARD OPTIONS

E 5 G [ ][ ] (SPECIFY) [ ][ ] (SPECIFY) [ ] (SPECIFY) —

ADDITIONAL OPTIONS

[ ] (SPECIFY) [ ][ ] (SPECIFY) [ ] (SPECIFY)

PRINTED CIRCUIT BOARD DRILLING

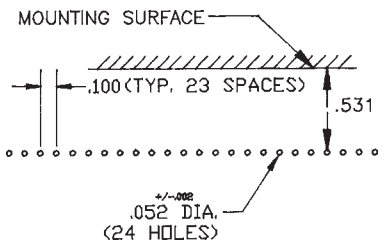

SHAFT, BUSHING, AND FLAT OPTIONS

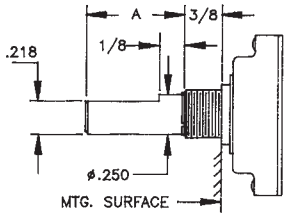

CHART "A"

P/N OPT.	SHAFT LGTH. "A"	
01	3/8	- STD.
02	1/2	
03	9/16	
04	3/4	
05	7/8	
06	1	

CHART "B"

P/N OPT.	FLAT ANGLE	
T	180°	- STD.
U	15°	
W	165°	
Y	195°	
Z	345°	

SHAFT AS VIEWED WITH NON-TURN LUG AT 9 O'CLOCK AND SHAFT IN EXTREME CCW POSITION AND STRUT BOLTS ORIENTED VERTICALLY.

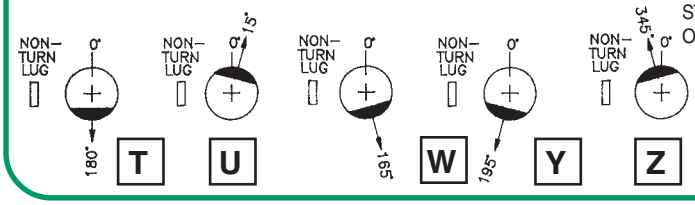

CUSTOM SWITCHES ARE AVAILABLE. CONTACT THE FACTORY WITH YOUR COMPLETE SPECIFICATIONS.

ELECTROSWITCH • ELECTRONIC PRODUCTS
UNIT OF ELECTRO SWITCH CORP.
2010 Yonkers Road
Raleigh, NC 27604
Telephone: (888) ROTARYS or (919) 833-0707
Fax: (800) 909-9171 or (919) 833-8016

SELECTOR GUIDE

ORIGINALLY DESIGNED AS MIL. SPEC. ROTARY ELECTRONIC SWITCHES

	CHARACTERISTICS	SERIES M4	SERIES M5	SERIES M6	SERIES M7
	Page Number	46,47	48,49	50,51	52,53
	Construction	ENCLOSED	ENCLOSED	OPEN	OPEN
	Diameter	1.43"	1.00"	1.75"	2.5" SQ.
	Positions	2 - 12	2 - 12	2 - 32	2 - 48
E	**Current and Voltage**	0.35A @ 115 VAC	2.5A @ 120 VAC	0.125A @ 115 VAC	0.125A @ 115 VAC
L		1.0A @ 28 VDC	2.0A @ 28 VDC	0.5A @ 28 VDC	0.5A @ 28 VDC
E	**Current Carrying Capacity**	10A	12A	10A	10A
C	**Dielectric Strength**	1,000 VAC	1,500 VAC	1,500 VAC	1,500 VAC
T	**Insulation Resistance**	10,000	100,000	1,000,000	1,000,000
R	**(megohms)**				
I	**Contact Resistance**	5	5	10	10
C	**(milliohms)**				
A					
L					
M	**Insulation** - Glass Epoxy	NO	NO	STANDARD	STANDARD
A	Diallyl Phthalate	STANDARD	STANDARD	NO	NO
T					
E					
R					
I	**Contacts** - Silver Alloy ★	STANDARD	STANDARD	STANDARD	STANDARD
A	Brass/Silver Plate	NO	NO	NO	NO
L	Gold Plate	YES	YES	YES	YES
M	**Stop Strength**	25 in. lb.	15 in. lb.	50 in. lb.	50 in. lb.
E	**Mechanical Life**	25,000 cycles	25,000 cycles	25,000 cycles	25,000 cycles
C	**Detenting Angles: 7.5°**	—	—	—	7.5
H	**11.25°**	—	—	11.25	—
A	**15°**	—	—	15	15
N	**22.5°**	—	—	22.5	—
I	**30°**	30	30	30	—
C	**36°**	—	36	—	—
A	**45°**	—	45	—	—
L	**60°**	—	60	—	—
	90°	—	90	—	—
O	**Quick Connect**	NO	NO	NO	NO
P	**Rear PC Mount**	NO	NO	YES	NO
T	**Vertical PC Mount ★**	NO	NO	NO	NO
I	**Front PC Mount ★**	NO	NO	NO	NO
O	**Dual Concentric Designs ★**	NO	YES	NO	YES
N	**Keylock ★**	NO	NO	NO	NO
S	**Spring Return ★**	NO	NO	YES	NO
	Water Resistant Seals ★	YES	YES	YES	YES
	Originally Designed To Meet Mil 3786/	SR28	SR04	SR40	SR15

The M4 and M5 Series use the enclosed frame worksheet on page 5 for custom designs.

The M6 and M7 Series use the open frame worksheet on page 45 for custom designs.

★ **Contact factory**

ELECTROSWITCH • ELECTRONIC PRODUCTS
UNIT OF ELECTRO SWITCH CORP.
2010 Yonkers Road
Raleigh, NC 27604
Telephone: (888) ROTARYS or (919) 833-0707
Fax: (800) 909-9171 or (919) 833-8016

OPEN FRAME WORKSHEET

SERIES PREFERRED _____

ELECTRICAL REQUIREMENTS:

☐ SHORTING OR ☐ NON-SHORTING

CURRENT CARRYING CAPACITY

INTERRUPTING CURRENT

MAXIMUM WORKING VOLTAGE

ADDITIONAL REQUIREMENTS: _____

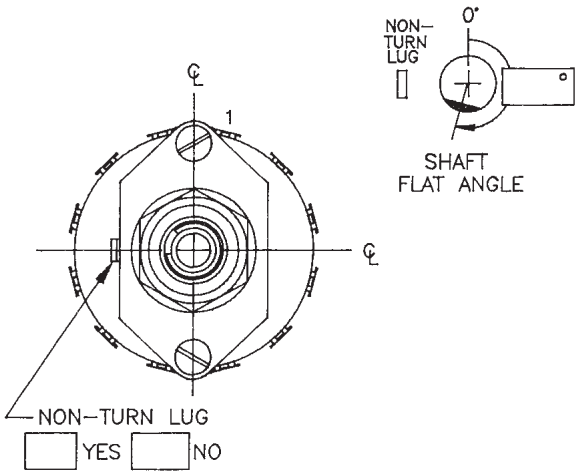

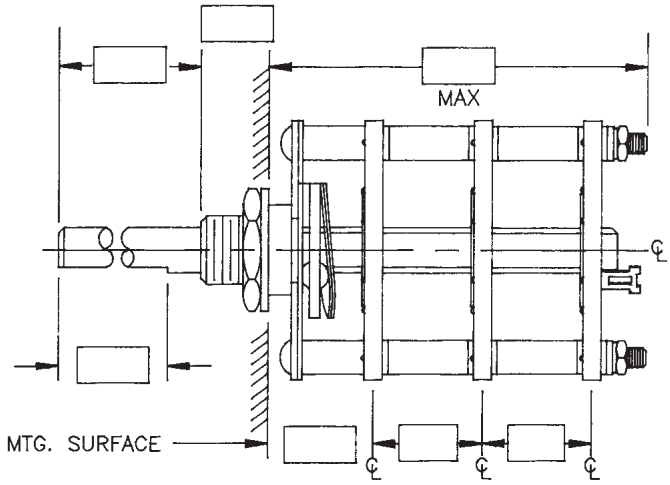

NOTES: SEE APPROPRIATE CATALOG PAGES FOR STANDARD DIMENSIONS AND OPTIONS.

MECHANICAL REQUIREMENTS:

NO. OF POSITIONS

NO. OF POLES

TERMINAL TYPE

INDEX ANGLE

Estimated usage _____

ADDITIONAL REQUIREMENTS:

ELECTROSWITCH
• ELECTRONIC PRODUCTS
UNIT OF ELECTRO SWITCH CORP.

2010 YONKERS ROAD, RALEIGH, NC 27604

FAX TRANSMISSION

FAX Numbers:
(919) 833-8016
(800) 909-9171
FOR ASSISTANCE PLEASE CALL:
(919) 833-0707
(888) ROTARYS

Sender Information

Date: _____ Time: _____

Name: _____

Company: _____

Address: _____

Ph #: _____

Fax #: _____

M4 - SERIES

SPECIFICATIONS AND ORDERING INFORMATION

1.43" DIAMETER 1.0 AMP @ 28 VDC

The M4 Series was originally designed to meet the requirements of MIL-S-3786/28. Standard construction includes solder lug terminals, adjustable stops and up to 12 positions.

SPECIFICATIONS

ELECTRICAL

Current and Voltage Rating: Make and break resistive load 1.0 amp @ 28 VAC; 0.35 amp @ 115 VDC; .
Current Carrying Capacity: 10 amps.
Dielectric Strength: 1,000 VAC between current carrying parts and ground.
Contact Resistance: Average initial 5 milliohms.
Insulation Resistance: In excess of 10,000 megohms

Hardware: Mounting nut and lockwasher are shipped assembled.

MECHANICAL

Materials and Finishes: All parts utilize non-corrosive materials as standard.
Clips and Rotors: Silver alloy as standard.
Insulation: Diallyl phthalate.
Index: Dual-ball, hill and valley design.
Index Life: 25,000 cycles minimum.
Index Torque: Switches have lowest practical torque consistent with crisp detenting and smooth, reliable operation.
Index Angles: Positive 30° standard.
Index Stops: Adjustable standard, or continuous.
Stop Strength: 25 in. lbs. minimum.

STANDARD PART NUMBER

2 WAFER/DECK CONSTRUCTION SWITCHES - 30° INDEXING
ADJUSTABLE STOPS SET @ 12 POS. - SOLDER LUG TERMINALS

POLES	ACTIVE POSITIONS	POLES/ DECK	NO. OF DECKS	SHORTING	NON-SHORTING	FIG. *
01	02-12	1	1	M4D0112S	M4D0112N	MB
02	02-12	1	2	M4D0212S	M4D0212N	MB
03	02-12	1	3	M4D0312S	M4D0212N	MB
04	02-12	1	4	M4D0412S	M4D0412N	MB

1 WAFER/DECK CONSTRUCTION SWITCHES - 30° INDEXING
ADJUSTABLE STOPS SET @ 6 POS. - SOLDER LUG TERMINALS

POLES	ACTIVE POSITIONS	POLES/ DECK	NO. OF DECKS	SHORTING	NON-SHORTING	FIG. *
01	02-06	1	1	M4D01 06S	M4D01 06N	MA
02	02-06	1	2	M4D0206S	M4D0206N	MA
03	02-06	1	3	M4D0306S	M4D0306N	MA
04	02-06	1	4	M4D0406S	M4D0406N	MA

* FIGURES ARE SHOWN ON PAGE 57.

DIMENSIONS

STANDARD CONSTRUCTION **M4D** - DIALLYL PHTHALATE CONSTRUCTION

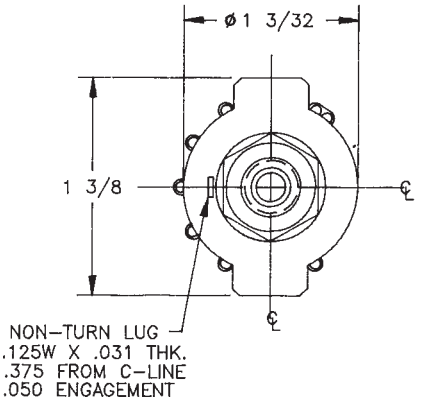

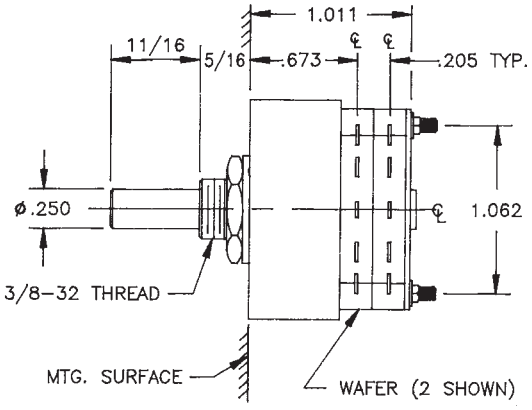

M

ELECTROSWITCH • ELECTRONIC PRODUCTS
UNIT OF ELECTRO SWITCH CORP.
2010 Yonkers Road
Raleigh, NC 27604
Telephone: (888) ROTARYS or (919) 833-0707
Fax: (800) 909-9171 or (919) 833-8016

M4 - SERIES

How to Order Additional Options:

2 DIGIT SERIES	INSULATION TYPE	TOTAL POLES	ACTIVE POSITIONS	CONTACT TYPE	STOP TYPE	SHAFT/ BUSHING	SHAFT FLAT
M4	D - DIALLYL	01 - MIN.	12 - MAX @ 30°	S - SHORTING N - NON SHORTING	A - ADJ. C - CONT.	SEE CHART "A"	SEE CHART "B"

CUSTOMERS SPECIFIED ORDER NUMBER FOR STANDARD OPTIONS

M	4	D	[ ][ ]	[ ][ ]	[ ]	—	ADDITIONAL OPTIONS [ ]	[ ][ ]	[ ]
			(SPECIFY)	(SPECIFY)	(SPECIFY)		(SPECIFY)	(SPECIFY)	(SPECIFY)

SHAFT, BUSHING, AND FLAT OPTIONS

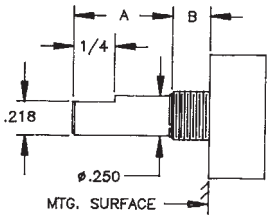

CHART "A"

P/N OPT.	SHAFT LGTH. "A"	BUSH. LGTH. "B"	
01	11/16	5/16	- STD
02	7/16	7/16	

CHART "B"

P/N OPT.	FLAT ANGLE	
U	330°	
B	ROUND	- STD

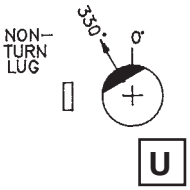

SHAFT AS VIEWED WITH NON-TURN LUG AT 9 O'CLOCK AND SHAFT IN EXTREME CCW POSITION AND STRUT BOLTS ORIENTED VERTICALLY.

M

CUSTOM SWITCHES ARE AVAILABLE. CONTACT THE FACTORY WITH YOUR COMPLETE SPECIFICATIONS.

ELECTROSWITCH • ELECTRONIC PRODUCTS
UNIT OF ELECTRO SWITCH CORP.
2010 Yonkers Road
Raleigh, NC 27604
Telephone: (888) ROTARYS or (919) 833-0707
Fax: (800) 909-9171 or (919) 833-8016

M5 - SERIES

SPECIFICATIONS AND ORDERING INFORMATION

1" DIAMETER 2.0 AMPS @ 28 VDC

The M5 Series was orginally designed to meet the requirements of MIL-S-3786/4. Standard construction includes 30° indexing up to 12 positions, solder lug terminals and adjustable stops. A very reliable switch for long life.

SPECIFICATIONS

ELECTRICAL

Current and Voltage Rating: Make and break resistive load 2.0 amps @ 28 VDC; 2.5 amp @ 120 VAC.
Current Carrying Capacity: 12 amps.
Dielectric Strength: 1,500 VAC between current carrying parts and ground.
Contact Resistance: Average initial 5 milliohms.
Insulation Resistance: In excess of 100,000 megohms

Hardware: Mounting nut and lockwasher are shipped assembled.

MECHANICAL

Materials and Finishes: All parts utilize non-corrosive materials as standard.
Terminals: Copper alloy with silver plating as standard.
Insulation: Diallyl phthalate.
Index: Dual-ball, hill and valley design.
Index Life: 25,000 cycles minimum.
Index Torque: Switches have lowest practical torque consistent with crisp detenting and smooth, reliable operation.
Index Angles: Positive 30° standard, 36°, 45°, 60°, and 90° available.
Index Stops: Fixed standard, adjustable, or continuous.
Stop Strength: 15 in. lbs. minimum.

STANDARD PART NUMBER

ADJUSTABLE STOPS

SWITCHES - 30° INDEXING - STOPS SET @ 2 POS. - SOLDER LUG TERMINALS

POLES	ACTIVE POSITIONS	POLES/ DECK	NO. OF DECKS	SHORTING	NON-SHORTING	FIG. *
01	02-12	1	1	M5D0112S - A	M5D0112N - A	CE
02	02-12	1	2	M5D0212S - A	M5D0212N - A	CE
02	02-06	2	1	M5D0206S - A	M5D0206N - A	CJ
03	02-12	1	3	M5D0312S - A	M5D0312N - A	CE
04	02-12	1	4	M5D0412S - A	M5D0412N - A	CE
04	02-06	2	2	M5D0406S - A	M5D0406N - A	CJ
06	02-06	2	3	M5D0606S - A	M5D0606N - A	CJ
08	02-06	2	4	M5D0806S - A	M5D0806N - A	CJ

* FIGURES ARE SHOWN ON PAGE 55.

DIMENSIONS

STANDARD CONSTRUCTION

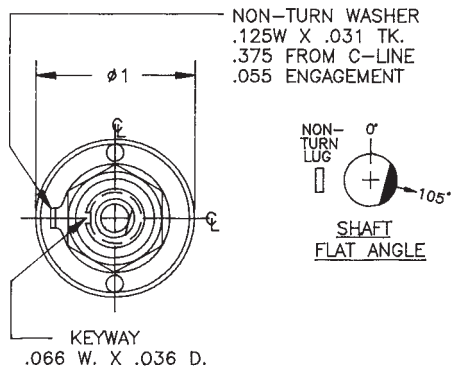

M5D - DIALLYL PHTHALATE CONSTRUCTION

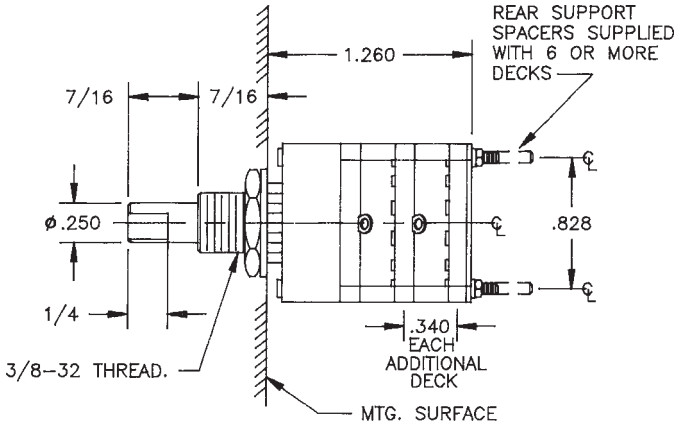

M

ELECTROSWITCH • ELECTRONIC PRODUCTS
UNIT OF ELECTRO SWITCH CORP.

2010 Yonkers Road
Raleigh, NC 27604
Telephone: (888) ROTARYS or (919) 833-0707
Fax: (800) 909-9171 or (919) 833-8016

M5 - SERIES

How to Order Additional Options:

2 DIGIT SERIES	INSULATION TYPE	TOTAL POLES	ACTIVE POSITIONS	CONTACT TYPE	INDEX ANGLE	STOP TYPE	SHAFT/ BUSHING	SHAFT FLAT
M5	D - DIALLYL	01 - MIN.	12 - MAX @ 30° 10 - MAX @ 36° 08 - MAX @ 45° 06 - MAX @ 60° 04 - MAX @ 90°	S - SHORTING N - NON SHORTING	30° 36° 45° *60° *90° *NOT AVAILABLE IN SHORTING	F - FIXED A - ADJ. (30° AND 36° ONLY) C - CONT.	SEE CHART "A"	SEE CHART "B"

CUSTOMERS SPECIFIED ORDER NUMBER FOR STANDARD OPTIONS

M	5	D	(SPECIFY)	(SPECIFY)	(SPECIFY)	—	ADDITIONAL OPTIONS (SPECIFY)	(SPECIFY)	(SPECIFY)	(SPECIFY)

SHAFT, BUSHING, AND FLAT OPTIONS

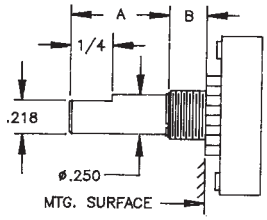

CHART "A"

P/N OPT.	SHAFT LGTH. "A"	BUSH. LGTH. "B"	
01	7/16	7/16	- STD
02	3/8	5/16	

CHART "B"

P/N OPT.	FLAT ANGLE	
U	105°	- STD
B	ROUND	

SHAFT AS VIEWED WITH NON-TURN LUG AT 9 O'CLOCK AND SHAFT IN EXTREME CCW POSITION AND STRUT BOLTS ORIENTED VERTICALLY.

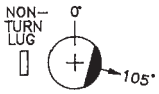

U

M

CUSTOM SWITCHES ARE AVAILABLE. CONTACT THE FACTORY WITH YOUR COMPLETE SPECIFICATIONS.

ELECTROSWITCH • ELECTRONIC PRODUCTS
UNIT OF ELECTRO SWITCH CORP.
2010 Yonkers Road
Raleigh, NC 27604
Telephone: (888) ROTARYS or (919) 833-0707
Fax: (800) 909-9171 or (919) 833-8016

M6 - SERIES

SPECIFICATIONS AND ORDERING INFORMATION

1 3/4" SQUARE 0.5 AMP @ 28 VDC

The M6 Series was originally designed to meet the requirements of MIL-S-3786/40. Standard construction includes 30° indexing up to 12 positions, solder lug terminals, and adjustable stops. Switching is available up to 32 positions.

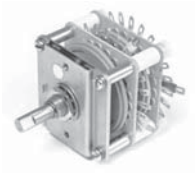

SPECIFICATIONS

ELECTRICAL

Current and Voltage Rating: Make and break resistive load 0.5 amp @ 28 VDC; 0.125 amp @ 115 VAC.
Current Carrying Capacity: 10 amps.
Dielectric Strength: 1,500 VAC between current carrying parts and ground.
Contact Resistance: Average initial 10 milliohms.
Insulation Resistance: In excess of 1,000,000 megohms

Hardware: Mounting nut and lockwasher are shipped assembled.

MECHANICAL

Materials and Finishes: All parts utilize non-corrosive materials as standard.
Clips and Rotors: Silver alloy composite as standard.
Insulation: Glass epoxy.
Index: Dual-ball, hill and valley design.
Index Life: 25,000 cycles minimum.
Index Torque: Switches have lowest practical torque consistent with crisp detenting and smooth, reliable operation.
Index Angles: Positive 30° standard, 11.25°, 15°, and 22.5° available.
Index Stops: Adjustable standard, or continuous.
Stop Strength: 50 in. lbs. minimum.

STANDARD PART NUMBER

EPOXY GLASS INSULATION SWITCHES - 30° INDEXING
ADJUSTABLE STOPS SET @ 2 POS. - SOLDER LUG TERMINALS

POLES	ACTIVE POSITIONS	POLES/ SECTION	NO. OF SECTIONS	SHORTING	NON-SHORTING	FIG. *
01	02-12	1	1	M6G0112S	M6G0112N	MC
02	02-12	1	2	M6G0212S	M6G0212N	MC
02	02-06	2	1	M6G0206S	M6G0206N	MD
03	02-12	1	3	M6G0312S	M6G0312N	MC
04	02-12	1	4	M6G0412S	M6G0412N	MC
04	02-06	2	2	M6G0406S	M6G0406N	MD
06	02-06	2	3	M6G0606S	M6G0606N	MD
08	02-06	2	4	M6G0806S	M6G0806N	MD

* FIGURES ARE SHOWN ON PAGE 57.

DIMENSIONS

STANDARD CONSTRUCTION
M6G - GLASS EPOXY CONSTRUCTION

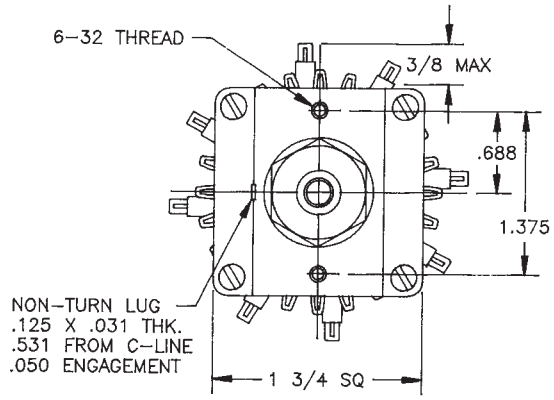

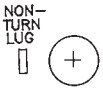

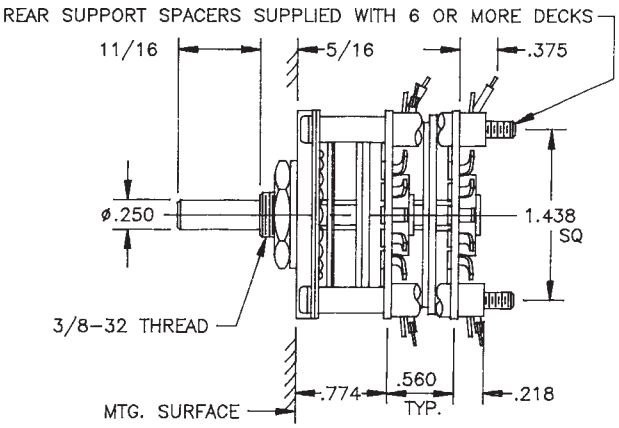

M

ELECTROSWITCH • ELECTRONIC PRODUCTS
UNIT OF ELECTRO SWITCH CORP.
2010 Yonkers Road
Raleigh, NC 27604
Telephone: (888) ROTARYS or (919) 833-0707
Fax: (800) 909-9171 or (919) 833-8016

M6 - SERIES

How to Order Additional Options:

2 DIGIT SERIES	INSULATION TYPE	TOTAL POLES	ACTIVE POSITIONS	CONTACT TYPE
M6	G - GLASS	01 - MIN.	12 - MAX @ 30° 16 - MAX @22.5°	N - NON-SHORTING S - SHORTING
M6	G - GLASS	01 - MIN.	32 - MAX @11.5° 24 - MAX @ 15°	S - SHORTING

TERMINAL TYPE	INDEX ANGLE	STOP TYPE	SHAFT/ BUSHING	SHAFT FLAT
L - SOLDER LUG R - REAR P.C.	11.5° 15° 22.5° 30°	A - ADJ. C - CONT.	SEE CHART "A"	SEE CHART "B"

CUSTOMERS SPECIFIED ORDER NUMBER FOR STANDARD OPTIONS — ADDITIONAL OPTIONS

M 6 G [ ][ ] (SPECIFY) [ ][ ] (SPECIFY) [ ] (SPECIFY) — [ ] (SPECIFY) [ ][ ] (SPECIFY) [ ] (SPECIFY) [ ][ ] (SPECIFY) [ ] (SPECIFY)

SHAFT, BUSHING, AND FLAT OPTIONS

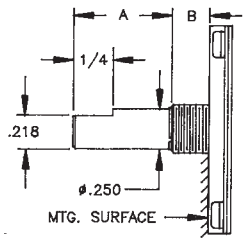

CHART "A"

P/N OPT.	SHAFT LGTH. "A"	BUSH. LGTH. "B"	
01	11/16	5/16	- STD
02	5/8	3/8	

CHART "B"

P/N OPT.	FLAT ANGLE	
B	ROUND	- STD
U	58°	

SHAFT AS VIEWED WITH NON-TURN LUG AT 9 O'CLOCK AND SHAFT IN EXTREME CCW POSITION AND STRUT BOLTS ORIENTED VERTICALLY.

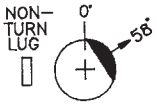

U

PRINTED CIRCUIT BOARD OPTIONS

R

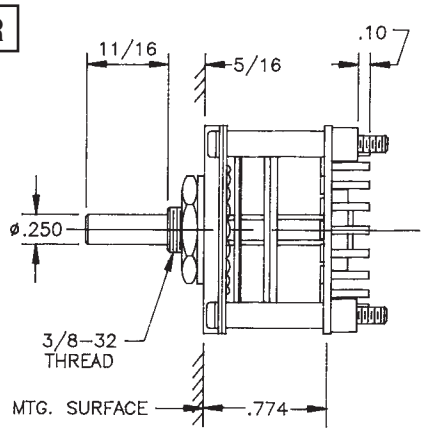

P.C. BOARD MOUNTING PATTERN

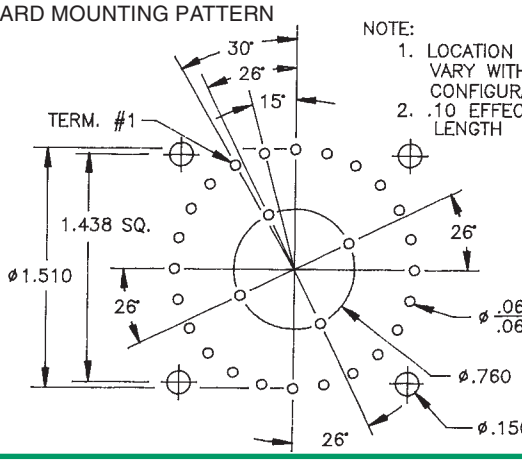

NOTE:
1. LOCATION OF TERMINALS VARY WITH CONTACT CONFIGURATION & INDEXING
2. .10 EFFECTIVE PIN INSERTION LENGTH

CUSTOM SWITCHES ARE AVAILABLE. CONTACT THE FACTORY WITH YOUR COMPLETE SPECIFICATIONS.

ELECTROSWITCH • ELECTRONIC PRODUCTS
UNIT OF ELECTRO SWITCH CORP.
2010 Yonkers Road
Raleigh, NC 27604
Telephone: (888) ROTARYS or (919) 833-0707
Fax: (800) 909-9171 or (919) 833-8016

M7 - SERIES

SPECIFICATIONS AND ORDERING INFORMATION

2 1/2" SQUARE 0.5 AMPS @ 28 VDC

The M7 Series was orginially designed to meet the requirements of MIL-S-3786/15. Standard construction includes 15° indexing up to 24 positions, adjustable stops and solder lug terminals. Switching is available with up to 48 positions. A very reliable switch for critical applications.

SPECIFICATIONS

ELECTRICAL

Current and Voltage Rating: Make and break resistive load 0.5 amp @ 28 VDC; 0.125 amp @ 115 VAC.
Current Carrying Capacity: 10 amps.
Dielectric Strength: 1,500 VAC between current carrying parts and ground.
Contact Resistance: Average initial 10 milliohms.
Insulation Resistance: In excess of 1,000,000 megohms

Hardware: Mounting nut and lockwasher are shipped assembled.

MECHANICAL

Materials and Finishes: All parts utilize non-corrosive materials as standard.
Clips and Rotors: Silver alloy composite as standard.
Insulation: Glass epoxy.
Index: Dual-ball, hill and valley design.
Index Life: 25,000 cycles minimum.
Index Torque: Switches have lowest practical torque consistent with crisp detenting and smooth, reliable operation.
Index Angles: Positive 15° standard, 7.5° available.
Index Stops: Adjustable standard, or continuous.
Stop Strength: 50 in. lbs. minimum.

STANDARD PART NUMBER

EPOXY GLASS INSULATION SWITCHES - 15° INDEXING
ADJUSTABLE STOPS SET @ 2 POS. - SOLDER LUG TERMINALS

POLES	ACTIVE POSITIONS	POLES/ SECTION	NO. OF SECTIONS	SHORTING	NON-SHORTING	FIG. *
01	02-24	1	1	.....	M7G0124N	ME
02	02-24	1	2	.....	M7G0224N	ME
02	02-12	2	1	.....	M7G0212N	MF
03	02-24	1	3	.....	M7G0324N	ME
04	02-12	2	2	.....	M7G0412N	MF
03	02-06	3	1	.....	M7G0306N	MG
06	02-12	2	3	.....	M7G0612N	MF
09	02-06	3	3	.....	M7G0906N	MG
12	02-06	4	3	.....	M7G1206N	MH

EPOXY GLASS INSULATION SWITCHES - 7.5° INDEXING
ADJUSTABLE STOPS SET @ 2 POS. - SOLDER LUG TERMINALS

POLES	ACTIVE POSITIONS	POLES/ SECTION	NO. OF SECTIONS	SHORTING	NON-SHORTING	FIG. *
01	02 - 48	1	1	M7G0148S-75		MI

* FIGURES ARE SHOWN ON PAGE 57.

DIMENSIONS

STANDARD CONSTRUCTION **M7G** - GLASS EPOXY CONSTRUCTION

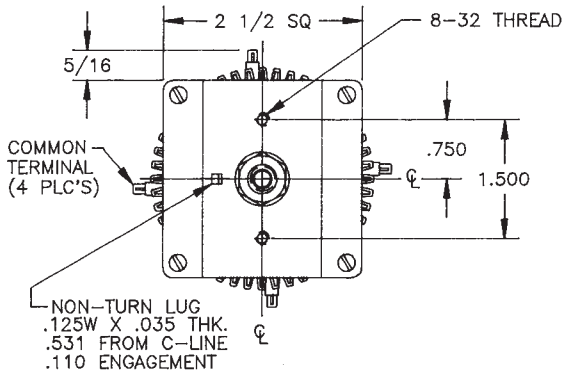

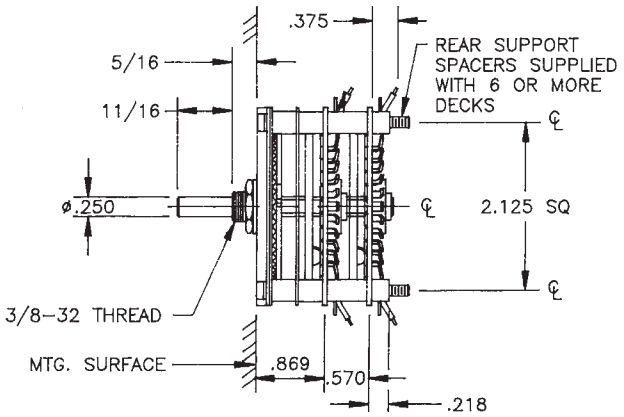

M

ELECTROSWITCH • ELECTRONIC PRODUCTS
UNIT OF ELECTRO SWITCH CORP.
2010 Yonkers Road
Raleigh, NC 27604
Telephone: (888) ROTARYS or (919) 833-0707
Fax: (800) 909-9171 or (919) 833-8016

M7 - SERIES

How to Order Additional Options:

2 DIGIT SERIES	INSULATION TYPE	TOTAL POLES	ACTIVE POSITIONS	CONTACT TYPE	TERMINAL TYPE	INDEX ANGLE	STOP TYPE	SHAFT/ BUSHING	SHAFT FLAT
M7	G - GLASS	01 - MIN.	48 - MAX @ 7.5°	S - SHORTING		7.5° 15°	A - ADJ. C - CONT.	SEE CHART "A"	SEE CHART "B"
M7	G - GLASS	01 - MIN.	24 - MAX @ 15°	N - NON-SHORTING					

CUSTOMERS SPECIFIED ORDER NUMBER FOR STANDARD OPTIONS

M	7	G					—				
			(SPECIFY)		(SPECIFY)		(SPECIFY)		(SPECIFY)	(SPECIFY)	(SPECIFY)	(SPECIFY)

ADDITIONAL OPTIONS

SHAFT, BUSHING, AND FLAT OPTIONS

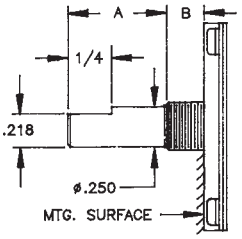

CHART "A"

P/N OPT.	SHAFT LGTH. "A"	BUSH. LGTH. "B"	
01	11/16	5/16	- STD
02	1	0	

CHART "B"

P/N OPT.	FLAT ANGLE	
B	ROUND	- STD
U	52.5°	

SHAFT AS VIEWED WITH NON-TURN LUG AT 9 O'CLOCK AND SHAFT IN EXTREME CCW POSITION AND STRUT BOLTS ORIENTED VERTICALLY.

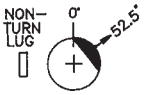

U

M

CUSTOM SWITCHES ARE AVAILABLE. CONTACT THE FACTORY WITH YOUR COMPLETE SPECIFICATIONS.

ELECTROSWITCH • ELECTRONIC PRODUCTS
UNIT OF ELECTRO SWITCH CORP.
2010 Yonkers Road
Raleigh, NC 27604
Telephone: (888) ROTARYS or (919) 833-0707
Fax: (800) 909-9171 or (919) 833-8016

SECTION ASSEMBLIES
AVAILABLE SEPARATE

POLES	NO. OF POSITIONS	POLES/ SECTION	INDEX ANGLE	SHORTING PART NUMBERS	NON-SHORTING PART NUMBERS	FIG.
D2D - SERIES		DIALLYL PHTHALATE INSULATION				
01	02-12	1	30°	D2D-50	D2D-51	DE
02	02-06	2	30°	D2D-52	D2D-53	DL
03	2-05	3	30°	D2D-54	D2D-55	DO
05	2-03	5	30°	D2D-56	D2D-57	DR
D2C - SERIES		CERAMIC INSULATION				
01	2-11	1	30°	D2C-20	D2C-21	DB
02	2-05	2	30°	D2C-22	D2C-23	DG
03	2-03	3	30°	D2C-24	D2C-25	DN
04	02	4	30°	D2C-26	D2C-27	DQ
D3C - SERIES		CERAMIC INSULATION				
01	2-11	1	30°	D3C-80	D3C-81	DA
02	2-05	2	30°	D3C-82	D3C-83	DH
D4C - SERIES		CERAMIC INSULATION				
01	02-12	1	30°	D4C-0	D4C-1	DD
02	02-06	2	30°	D4C-2	D4C-3	DL
03	02-05	3	30°	D4C-4	D4C-5	DO
05	02-03	5	30°	D4C-6	D4C-7	DR
06	02	6	30°	D4C-8	D4C-9	DS
01	02-06	1	60°	D4C-20	D4C-17	DJ
D4G - SERIES		GLASS EPOXY INSULATION				
01	2-11	1	30°	D4G-30	D4G-31	DA
02	2-05	2	30°	D4G-32	D4G-33	DG
03	2-03	3	30°	D4G-34	D4G-35	DM
04	2	4	30°	D4G-36	D4G-37	DP
D7C - SERIES		CERAMIC INSULATION				
01	2-06	1	30°	D7C-SXD	D7C-XD	DI
01	2-11	1	30°	D7C-SYD	D7C-YD	DB
02	2-05	2	30°	D7C-SRRD	D7C-RRD	DF
01	2-06	1	60°	D7C-SZZD	D7C-ZZD	DK
D7G - SERIES		GLASS EPOXY INSULATION				
01	2-11	1	30°	D7G-BD	D7G-JD	DB
02	2-05	2	30°	D7G-SKD	D7G-KD	DH
E4C - SERIES		CERAMIC INSULATION				
01	2-17	1	20°	E4C-8	E4C-N8	EA
02	2-08	2	20°	E4C-10	E4C-N10	EB
03	02-05	3	20°	E4C-9	E4C-N9	EC

INDEX ASSEMBLIES
AVAILABLE SEPARATE

INDEX ANGLE	NO. OF POSITIONS	NO. OF SECTIONS	PART NUMBERS	PAGE NUMBER
D2 - SERIES				
30°	02-12	1-2	D2-512	20, 21
30°	02-12	3-5	D2-513	20, 21
D3 - SERIES				
30°	02-11	1-4	D3-600	22, 23
D4 - SERIES				
30°	02-12	1-3	D4-300	24, 25
30°	02-12	4-6	D4-301	24, 25
30°	02-12	7-9	D4-302	24, 25
60°	02-06	1-3	D4-304	24, 25
60°	02-06	4-6	D4-305	24, 25
D7 - SERIES				
30°	02-11	1-3	D7-270	30, 31
30°	02-11	4-5	D7-271	30, 31
30°	02-11	6-10	D7-272	30, 31
60°	02-06	1-2	D7-273	30, 31
60°	02-06	3-8	D7-275	30, 31
E4 - SERIES				
20°	02-17	1-6	E4-7	40, 41

KNOBS AND DIAL PLATES

KNOBS

Part Number	1910DG	1400R	1202BJ	1930BP	1922	1914N
Switch Type	Rotary	Rotary	Rotary	Rotary	Rotary	Rotary
Shaft Diameter	0.125	0.125	0.250	0.250	0.250	0.250
Description	Inner knob with skirt and spun silver color cap	Pointer knob with one set screw	Round knob with spun silver color cap and one set screw	Large round knob with skirt and one set screw	Outer knob for dual concentric designs	Round knob with brass insert and one set screw
Overall Length	0.75	0.82	0.75	1.50	1.06	0.75

KNOBS

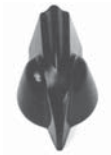

Part Number	P 2300	5149A	SSKW	SSKB		
Switch Type	Rotary	Lever	Lever	Lever		
Shaft Diameter	0.250	0.187x0.050	0.187x0.060	0.187x0.060		
Description	Pointer knob with one set screw	Oval knob push on design	Switch tip push on design-white	Switch tip push on design-black		
Overall Length	1.25	0.79	0.35 Dia.	0.35 Dia.		

DIAL PLATES

Part Number	P173	P230	P232	P231*	P115	P117	P118	P112
Switch Angle	15°	20°	20°	20°	30°	30°	30°	30°
Numbering Description	1-23	1-5	1-8	1-17	1-5	1-10	1-11	1-12
Plate Diameter	1.87	2.75	2.75	2.75	1.87	1.87	1.87	1.87

* Discontinued

FIGURES/CIRCUIT DIAGRAMS

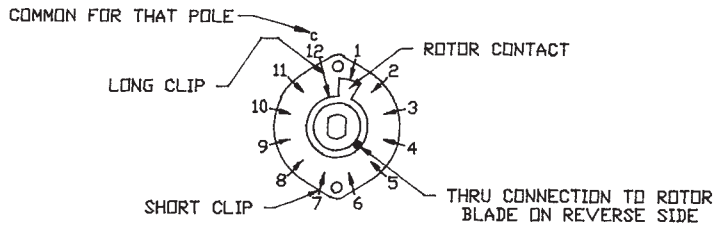

ALL DIAGRAMS ARE DRAWN AS VIEWED FROM THE KNOB END OF THE SWITCH, WITH THE LOCATING LUG IN THE 9 O'CLOCK POSITION AND THE SHAFT IN THE EXTREME COUNTER CLOCKWISE POSITION.

THE 'REAR' SIDE DIAGRAM OF THE SECTION IS VIEWED AS TRANSPARENT FROM THE KNOB END.

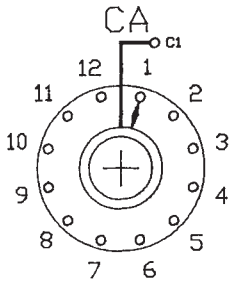

ONE POLE
2-12 POSITION

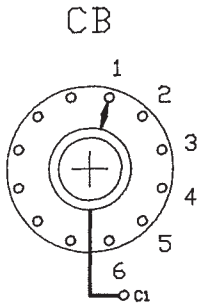

ONE POLE
2-6 POSITION
VPC

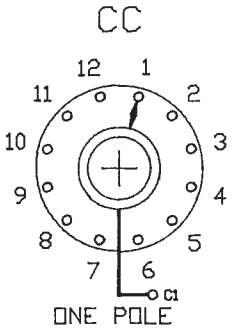

ONE POLE
2-12 POSITION
VPC

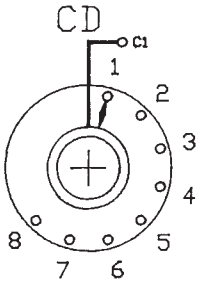

ONE POLE
2-8 POSITION

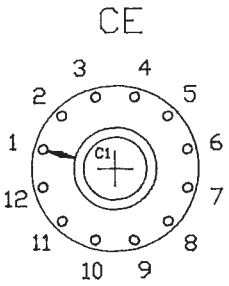

ONE POLE
2-12 POSITION

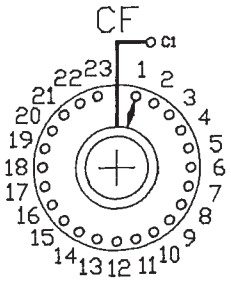

ONE POLE
2-23 POSITION

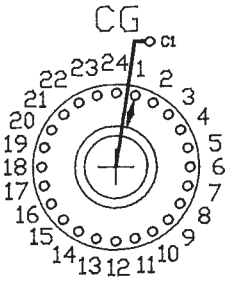

ONE POLE
24 CONTINUOUS

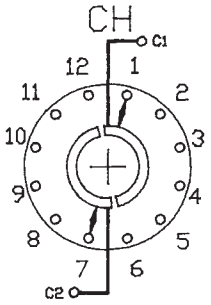

TWO POLE
2-6 POSITION

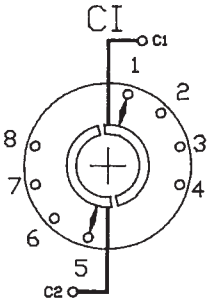

TWO POLE
2-4 POSITION

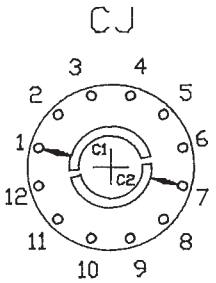

TWO POLE
2-6 POSITION

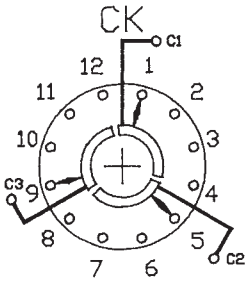

THREE POLE
2-4 POSITION

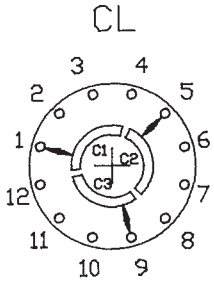

THREE POLE
2-4 POSITION

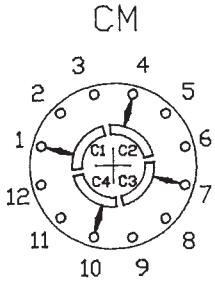

FOUR POLE
2-3 POSITION

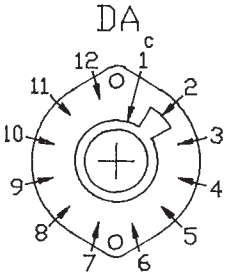

REAR

ONE POLE
2-11 POSITION

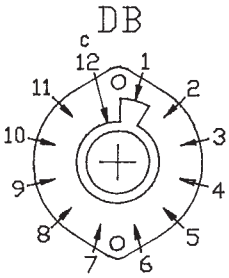

REAR

ONE POLE
2-11 POSITION

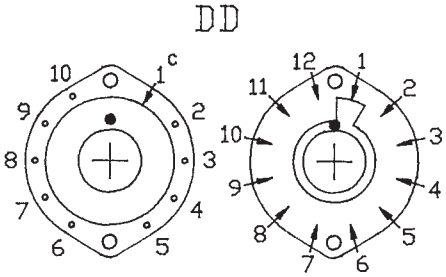

FRONT REAR

ONE POLE, 2-12 POSITION

FIGURES/CIRCUIT DIAGRAMS

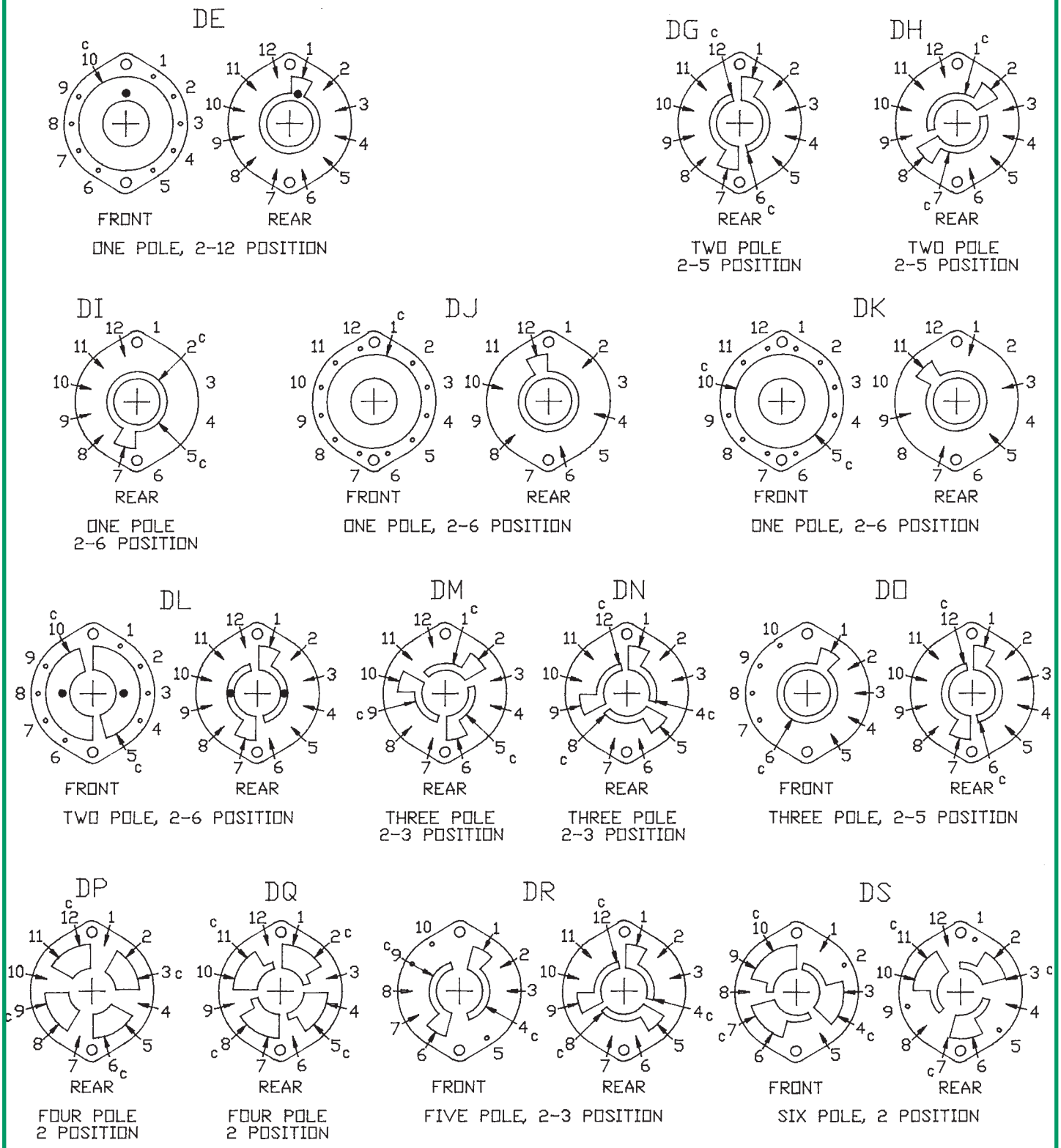

VIEWED FROM THE KNOB END OF SWITCH

FIGURES/CIRCUIT DIAGRAMS

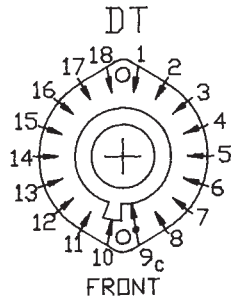

ONE POLE
2-17 POSITION

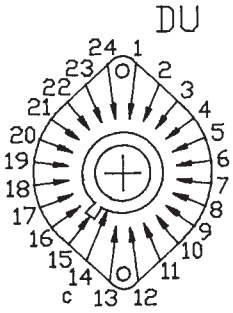

ONE POLE
2-23 POSITION

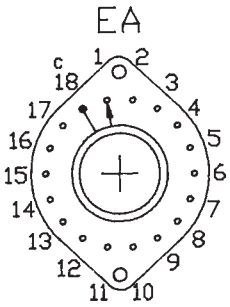

ONE POLE
2-17 POSITION

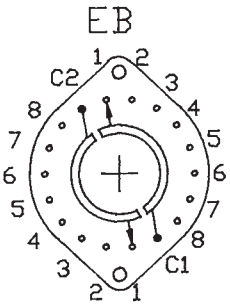

TWO POLE
2-8 POSITION

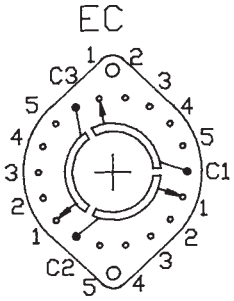

THREE POLE
2-5 POSITION

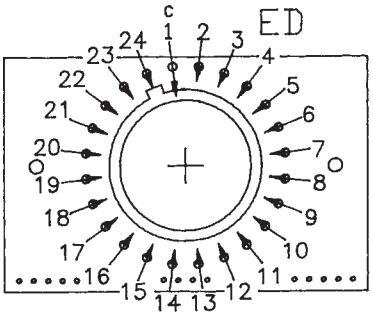

ONE POLE, 2-23 POSITION

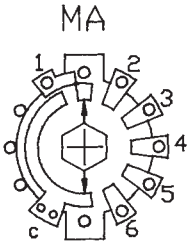

ONE POLE
2-6 POSITION

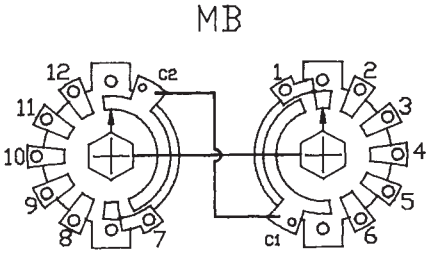

ONE POLE, 2-12 POSITION

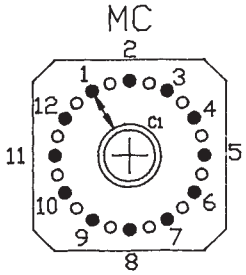

ONE POLE
2-12 POSITION

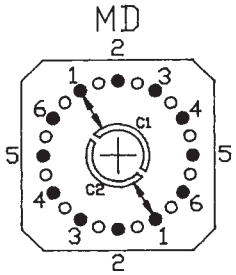

TWO POLE
2-6 POSITION

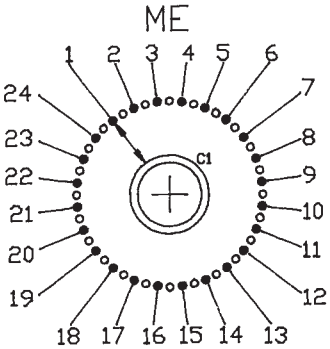

ONE POLE, 2-24 POSITION

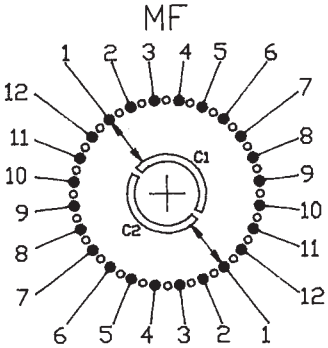

TWO POLE, 2-12 POSITION

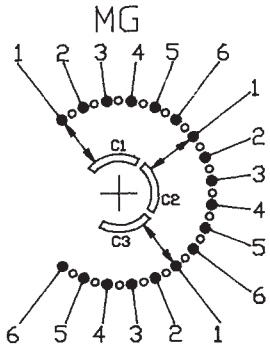

THREE POLE, 2-6 POSITION

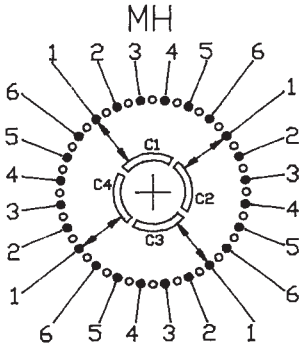

FOUR POLE, 2-6 POSITION

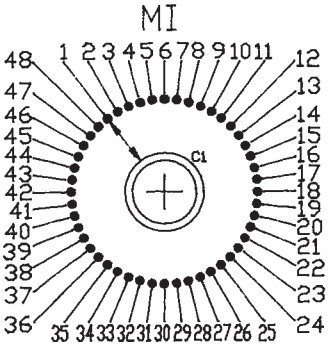

ONE POLE, 2-48 POSITION

VIEWED FROM THE KNOB END OF SWITCH

REFERENCE FIGURES/CIRCUIT DIAGRAMS

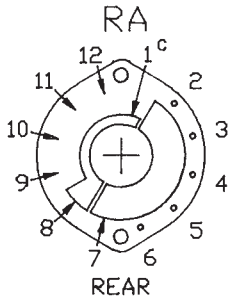

ONE POLE, 2-5 POSITION.
UNUSED CLIPS ARE PROGRESSIVELY SHORTED BY SEPARATE CONTACT WITH CW ROTATION.

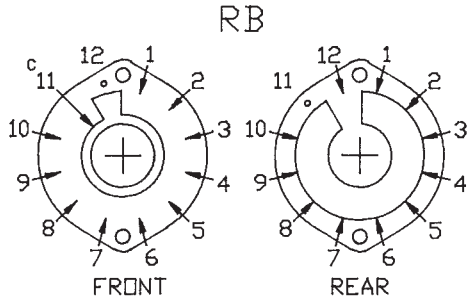

TWO POLE, 2-11 POSITION
ALL UNUSED CLIPS CONNECTED AND SHORTED OUT.

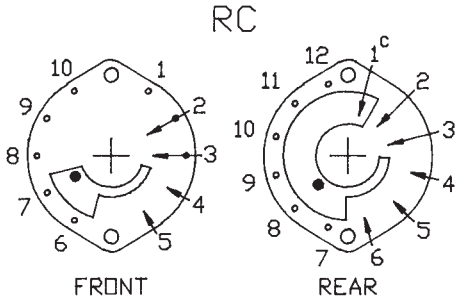

ONE POLE, 2-10 POSITION. NINE ACTIVE CLIPS, ALL OPEN IN FULL CCW POSITION AND PROGRESSIVELY PICKED UP AND SHORTED TO COMMON CONTACT WITH CW ROTATION.

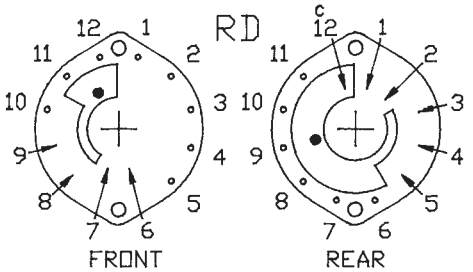

ONE POLE, 2-10 POSITION. NINE ACTIVE CLIPS, ALL OPEN IN FULL CCW POSITION AND PROGRESSIVELY PICKED UP AND SHORTED TO COMMON CONTACT WITH CW ROTATION.

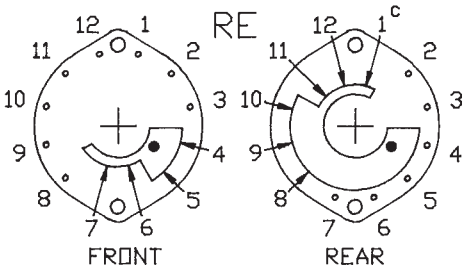

ONE POLE, 2-10 POSITION. NINE ACTIVE CLIPS, ALL SHORTED TO COMMON CONTACT IN FULL CCW POSITION AND PROGRESSIVELY OPENED AND DROPPED WITH CW ROTATION.

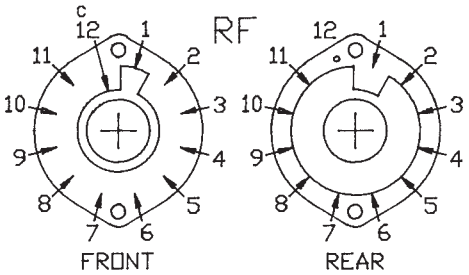

TWO POLE, 2-11 POSITION
ALL UNUSED CLIPS CONNECTED AND SHORTED OUT

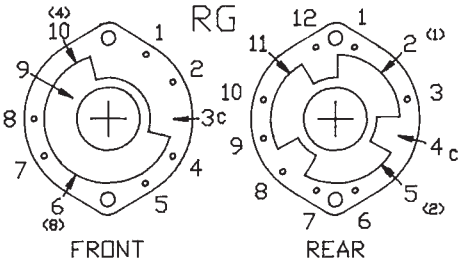

BCD OR COMPLEMENT

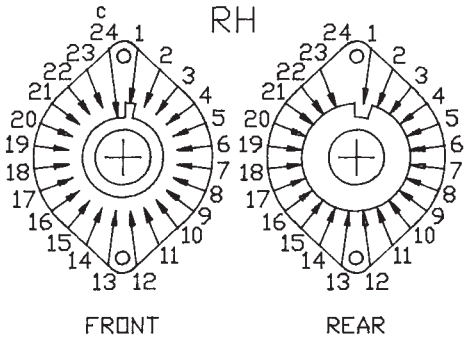

TWO POLE, 2-23 POSITION.
ALL UNUSED CLIPS CONNECTED AND SHORTED OUT.

VIEWED FROM THE KNOB END OF SWITCH

PANEL CUTOUTS

C1 SERIES

STANDARD - TW0 PIECE
(FOR .125" DIA. SHAFT)

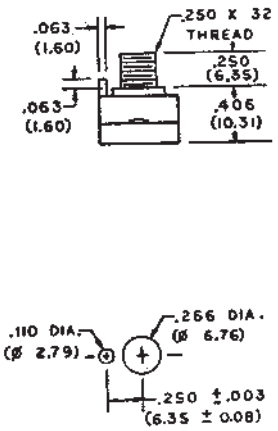

OPTIONAL - ONE PIECE
(FOR .250" DIA. SHAFT)

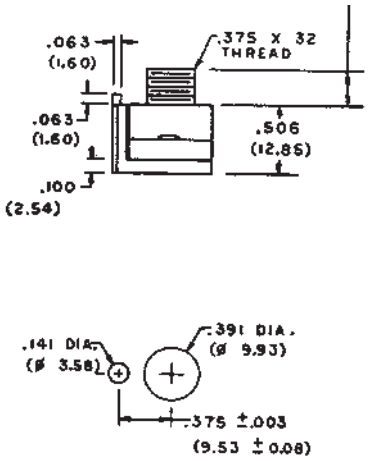

C4 SERIES

STANDARD - ONE PIECE

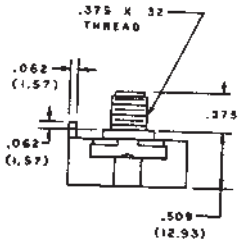

ONE PIECE
DIE CAST

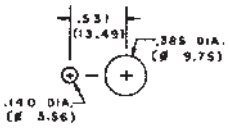

C2/C3 SERIES

STANDARD - 1/4 - 32 THD.

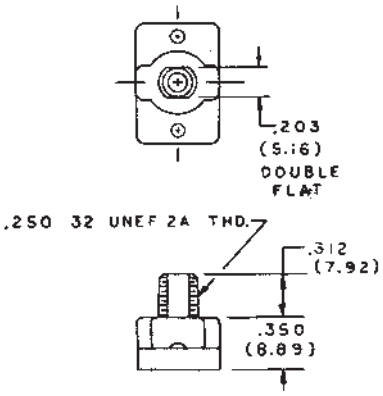

OPTIONAL - 3/8 - 32 THD.

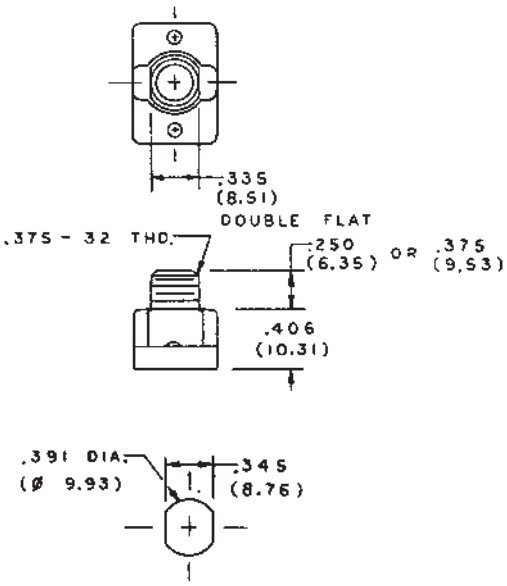

C7 AND E5 SERIES

STANDARD

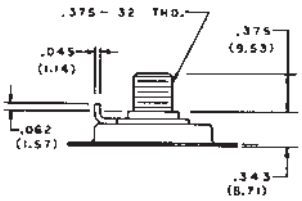

BRASS BUSHING/STEEL
HSG.

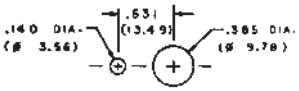

M4 SERIES

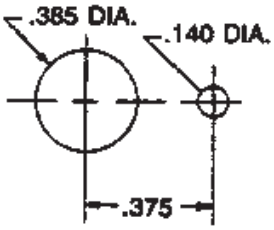

M6 AND M7 SERIES

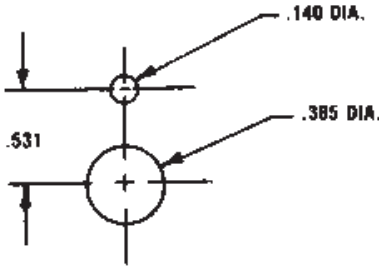

OPERATING TEMPERATURE RANGE

The following chart shows minimum and maximum operating temperatures for standard product, in degrees Celsius, by switch series.

C1	-17° to +75°
C2/C3	-17° to +75°
C4	-17° to +75°
C5/C6	-17° to +75°
C7	-17° to +75°
D1	-65° to +125°
D2	-65° to +125°
D3	-65° to +125°
D4	-65° to +125°
D5	-65° to +125°
D6	-65° to +125°
D7	-65° to +125°
D8	-65° to +125°
D9	-65° to +125°
E1	-65° to +125°
E2	-65° to +125°
E3	-65° to +125°
E4	-65° to +125°
E5	-65° to +125°
M4	-65° to +125°
M5	-65° to +125°
M6	-65° to +125°
M7	-65° to +125°

ADDITIONAL PRODUCTS & MANUFACTURERS

	NKK	Electroswitch
Toggles:	E Series	A Series
	M Series	A Series
	M2T Series	A Series
	WT Series	WT Series
Rockers:	M. Series	B Series
	M2T Series	WR Series
	WR Series	WR Series
Pushbuttons:	EB Series	PS Series
	FB Series	SA1 Series

	Carling	Electroswitch
Toggles:	2M1 Series	A Series
	2MS Series	WT Series
Rockers:	1M1 Series	B Series
	1MS Series	WR Series
Pushbuttons:	3MN Series	PS Series
	3MA Series	PS Series

	Grayhill	Electroswitch
Toggles:	34A Series	A Series
	34B Series	WT Series
Rockers:	47A Series	B Series
	47B Series	WR Series
Pushbuttons:	39-2 Series	SA1 Series

	APEM	Electroswitch
Toggles:	5000 Series	A Series
	S / ST Series	WT Series
Rockers:	7000 Series	B Series
	S / SR Series	WR Series
Pushbuttons:	1800 Series	PS Series
	800	PS
	PB	PB

	Bourns	Electroswitch
Encoders:	EN Series	900 Series
	ECW Series	700 Series
	EAW Series	700 Series

	Grayhill	Electroswitch
Encoders:	62 Series	OE2 Series
	61A, B, C	OE2 Series
	61S, K, R	900 Series
	63K, R	900 Series
	25 Series	MMP/REL
	25L Series	700 Series
Rotaries:	42, 43	M5/C4
	44, 45, 54	M5/C4

	Clarostat	Electroswitch
Encoders:	510 Series	700 Series
	600	900 Series

	Dialight	Electroswitch
Indicator Lights:	252-9951-	LHC82
	270-1930-	MS25010A
	800-1030-	MS25041
	804-1710-	MS25331
	128-09	LC35
	178-03	LC11
	162-09	LC12
	230-03	LC25
	162-14	LC29
	130-09	LC33

Solenoids

Tubular, Box Frame, and Rotary
- Guardian
- Deltrol Controls
- Ledex
- SAI Burgess
- Dormeyer

About ELECTRO SWITCH Corp.

ELECTRO SWITCH Corp. was founded in 1946 to manufacture rotary switches primarily for Naval ships where ruggedness was needed to withstand the high-shock, vibration, and shipboard environments. This business was expanded to include nuclear reactor control and missile control applications, including sophisticated motorized units that were integrated with shipboard computer controls. Rigorous testing to military specifications such as MIL-S-6807, MIL-S-15291, MIL-S-21604 and MIL-S-24187 combined with a MIL-Q-9858 quality program ensured high quality, high reliability products.

The company branched out into specialized industrial switching areas such as locomotives, earth-moving equipment, and engine-generators where the ruggedness and high reliability of ELECTRO SWITCH products were needed. UL and CSA certifications were obtained using UL1054, UL508, and CSA22.2 specifications.

This led the company to the electrical utility industry where control switches, lock-out relays, and other auxiliary relay devices were developed and qualified to ANSI/IEEE and NEMA standards including nuclear. Electro Switch is now considered “first-choice” in this industry.

The ability to custom design rotary switches and relay products to precisely fit every application has taken the company into many unique applications. The opportunity to choose from many different types of switches enables the company to provide the best product for every application – fully qualified at the lowest cost to the consumer.

About ELECTROSWITCH Electronic Products

A separate manufacturing unit was set up in 1986 to provide the electronic applications customer the same kind of variety, quality, reliability, and value that had become an Electro Switch Corp. trademark. Combining the best products from Shallcross, Stackpole, ASM, Centralab/CRL, and Oak Grigsby, the ELECTROSWITCH unit provides an enviable line-up of products to satisfy nearly every electronic application. These have been supplemented by new designs for better PC insert applications and lever-switch designs. Mirroring the parent company’s constant striving to be the best supplier of switches, the ELECTROSWITCH unit has applied the same sound design, careful manufacturing, and rigid quality control techniques to ensure complete customer satisfaction. After all, with a product line as specialized as ours and as critical in their application, we have to do the job right the first time…and every time…to support our customers’ demands for the highest quality and reliability.

ELECTROSWITCH • ELECTRONIC PRODUCTS
UNIT OF ELECTRO SWITCH CORP.